TIMKEN

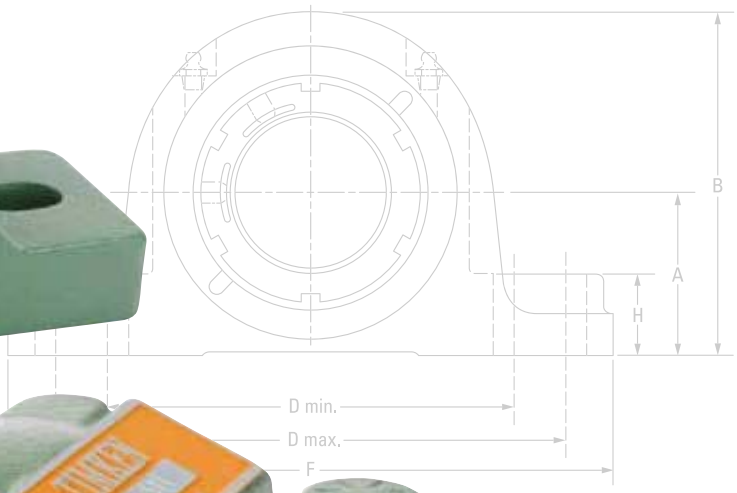

TIMKEN® SAF SPLIT-BLOCK HOUSED UNITS

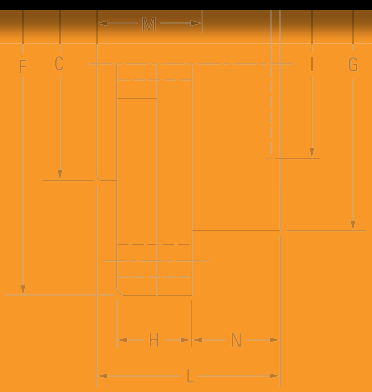

TIMKEN® HOUSED UNIT CATALOG INDEX

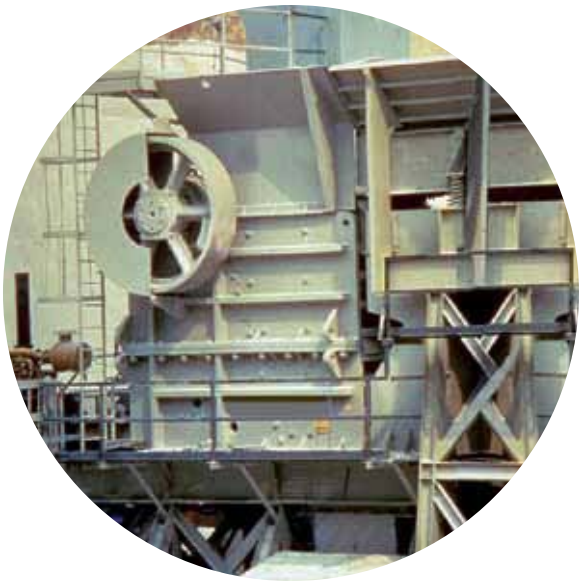

GROW STRONGER WITH TIMKEN

Every day, people around the world count on the strength of Timken. Our expertise in metallurgy, friction management and mechanical power transmission helps them accelerate improvements in productivity and uptime.

We supply products and services that can help keep your operations moving forward, whether you need drive train kits for commercial vehicles, durable housings for bearings in dirty environments, couplings that avoid metal-to-metal contact between motors and gearboxes, repair services for rail bearings, steel for an aircraft engine shaft, or other products and services for your applications.

When you choose Timken, you receive more than high-quality products and services: You gain a worldwide team of highly trained and experienced Timken people committed to working collaboratively with you to improve your business.

Globally, our 20,000 people provide reliable answers for a wide range of operations in manufacturing, mining, medical equipment, aerospace, transportation, oil and gas – and other diverse industries.

INCREASE YOUR EQUIPMENT UPTIME

In addition to high-quality bearings, engineered steel and mechanical power transmission components, we provide valuable integrated products and services. For example, we offer repair services and equipment monitoring equipment that can alert you to problems before they impact your uptime.

Additionally, we offer a broad selection of seals, premium lubricants, lubricators, couplings and chain to keep your operations moving smoothly.

Our 10 technology centers in the United States, Europe and Asia help pioneer tomorrow's innovations with extensive basic and applied scientific research programs. Through internal development and strategic acquisition of innovative companies, we continue to expand our portfolio of highly engineered bearings, steel and components.

RUGGED TIMKEN® HOUSED UNITS HELP PROTECT YOUR BEARINGS

When you choose sturdy Timken housings, your bearings can keep rolling smoothly, even in harsh environments impacted by dirt, debris, water and other contaminants. Timken engineers designed special housings to withstand tough challenges on the job.

Protected inside durable cast iron or steel, our highly engineered Timken® ball and roller bearings work hard to help you manufacture and transport materials, without excessive maintenance due to contaminants.

Choose from our selection of housed units designed with ball, tapered and spherical bearings. Select enhancements like Timken® seals, lubricants and housing covers best suited for each task. Our engineers help you choose the right combination of bearings and accessories to extend bearing life, increase uptime and reduce maintenance costs.

Of course, you can interchange existing products with Timken housed units because our bolt holes and shaft centerline dimensions are designed to conform to industry standards.

Timken® housed units reflect our strengths in metallurgy, engineering and manufacturing. We produce all our bearings in adherence with the Timken Quality Management System for consistency in all our facilities around the world.

TIMKEN® BALL HOUSED UNITS OFFER EASY INSTALLATION, FLEXIBLE OPTIONS

Timken® ball housed units, available in a variety of sizes and types, feature wide-inner-ring ball bearings that provide additional shaft support and locking options. The Timken® wide-inner-ring ball bearing is designed for straight shafts and can be positioned without shoulders, locknuts or adapters.

For easy installation, our ball housed units can be ordered pre-assembled with bearings, housings, seals and locking systems. Choose from pillow blocks, flanged cartridges, take-up units and cylindrical cartridges. Our cast-iron, pressed-steel and other optional materials give you durable choices for the exterior covers. Timken® locking options include set screws, self-locking collars and concentric collars.

Timken® Shaft Guarding Technology™ deters set-screw damage to shafts by placing a hardened band in the groove along the inner ring of the bearing. The set screws press against the band to transfer gripping pressure onto the shaft, preventing nicks, as well as raised-metal or permanent shaft damage. The stainless-steel band resists corrosion on the shaft. This system is particularly helpful for applications where it would be expensive and time-consuming to replace shafts.

TYPICAL INDUSTRIES AND APPLICATIONS

Use Timken ball bearing housed units in agricultural applications, fans, blowers, food processing devices and conveyors.

TIMKEN® TYPE E HOUSED UNITS REPEL CONTAMINANTS, ENHANCE PERFORMANCE

Timken® Type E tapered roller bearing housed units feature double-lip seals and locking collars that protect against water and other contaminants. This double-lip seal design blocks debris and retains grease better than single-lip or triple-lip seals, according to Timken 2012 laboratory tests.

Its cast-iron exterior includes a corrosion-resistant electro-coat finish for the housing and collar, a more durable shield than industry-standard powder coating or black oxide. Set screws with nylon patches reduce back-out, even in rigorous applications.

Premium Timken® tapered roller bearings inside Type E housings are manufactured with advanced technology that results in longer predicted useful bearing life than other housed units with standard bearings. Designed with optimized bearing profiles and improved surface finishes, Timken tapered roller bearings operate efficiently within the housing.

TYPICAL INDUSTRIES AND APPLICATIONS

Use Timken Type E housings for pulp and paper, power generation, mining, cement and aggregate industries. Our Type E housed units also are widely used in equipment for air-handling and treatment of water and waste water. Other common machine applications include mixers, washers, shredders, mills and oven/furnace roller beds.

TIMKEN® SPHERICAL ROLLER BEARING SOLID-BLOCK HOUSED UNITS WITHSTAND HARSH CONDITIONS

Timken® spherical roller bearing solid-block housed units stand up to rugged conditions. Composed of solid steel, they withstand most falling debris and handle up to ±1.5 degrees of misalignment. The steel used in these products is up to two times stronger than cast iron, which may break or pound out in tough applications.

Timken spherical roller bearing solid-block housed units come in five locking configurations: single and double set screws, eccentric locks for reversing applications, tapered-adaptor locks and double-tapered locks.

Choose from three sealing options: labyrinth seals (for high-speed, high-temperature applications) and triple-lip seals made of either nitrile or urethane. Timken® steel auxiliary covers provide an extra layer of protection, and they can be filled with Timken lubricants.

TYPICAL INDUSTRIES AND APPLICATIONS

Use Timken spherical roller bearing solid-block housed units in metals mills, aggregate and cement, mining, power generation, agriculture, pulp, paper, sawmills and other forest industries.

TIMKEN® SAF SPLIT-BLOCK HOUSED UNITS BEAR HEAVY LOADS

Timken® SAF split-block housed units are available in rugged cast iron, ductile iron or cast steel to match a range of industrial environments. Our Timken SAF housed units have separate, matched caps and bases. In larger sizes where housed units are heavier, this split-block design eases installation. Remove the cap using a pry-tool slot for bearing inspection, service and replacement.

Available in a variety of shaft sizes, Timken SAF units offer the choice of tapered-bore design for easy mounting or a straight-bore design for better axial location. The block can be converted from fixed to float by removing the stabilizing ring. Several sealing options protect against contamination, including a standard seal, which is a precision aluminum triple-ring labyrinth seal.

TYPICAL INDUSTRIES AND APPLICATIONS

Use Timken SAF housed bearings in power generation, coal, mining, aggregate, cement, metals, pulp, paper and other forestry operations, water treatment and food processing industries. Applications include warehousing, conveyors, movable bridges/heavy structures, industrial fans and blowers.

HOW TO USE THIS CATALOG

We designed this catalog to help you find the Timken housed units best suited to your specifications.

Timken offers an extensive range of bearings and accessories in both imperial and metric sizes. For your convenience, size ranges are indicated in millimeters and inches. Contact your Timken engineer to learn more about our complete line for the special needs of your application.

This publication contains dimensions, tolerances and load ratings, as well as engineering sections describing fitting practices for shafts and housings, internal clearances, materials and other bearing features. It provides valuable assistance in the initial consideration of the type and characteristics of the bearings that may best suit your particular needs.

ISO and ANSI/ABMA, as used in this publication, refer to the International Organization for Standardization and the American National Standards Institute/American Bearing Manufacturers Association.

Updates are made periodically to this catalog. Visit www.timken.com for the most recent version of the Timken® Housed Unit Catalog.

DISCLAIMER

This catalog is provided solely to give you analysis tools and data to assist you in your product selection. Product performance is affected by many factors beyond the control of Timken. Therefore, you must validate the suitability and feasibility of all product selections for your applications.

Timken products are sold subject to Timken terms and conditions of sale, which include our limited warranty and remedy. You can find these at http://www.timken.com/en-us/purchase/Pages/TermsandConditionsofSale.aspx.

Please consult with your Timken engineer for more information and assistance.

Every reasonable effort has been made to ensure the accuracy of the information in this writing, but no liability is accepted for errors, omissions or for any other reason.

SHELF LIFE AND STORAGE OF GREASE-LUBRICATED BEARINGS AND COMPONENTS

To help you get the most value from our products, Timken provides guidelines for the shelf life of grease-lubricated ball and roller bearings, components and assemblies. Shelf life information is based on Timken and industry test data and experience.

SHELF LIFE POLICY

Shelf life should be distinguished from lubricated bearing/component design life as follows:

- Shelf life of the grease-lubricated bearing/component represents the period of time prior to use or installation.
- The shelf life is a portion of the anticipated aggregate design life. It is impossible to accurately predict design life due to variations in lubricant bleed rates, oil migration, operating conditions, installation conditions, temperature, humidity and extended storage.
- Shelf life values, available from Timken, represent a maximum limit and assume adherence to the storage and handling guidelines suggested in this catalog or by a Timken associate. Deviations from the Timken storage and handling guidelines may reduce shelf life. Any specification or operating practice that defines a shorter shelf life should be used.

Timken cannot anticipate the performance of the grease lubricant after the bearing or component is installed or placed in service.

TIMKEN IS NOT RESPONSIBLE FOR THE SHELF LIFE OF ANY BEARING/COMPONENT LUBRICATED BY ANOTHER PARTY.

European REACH Compliance

Timken lubricants, greases and similar products sold in standalone containers or delivery systems are subject to the European REACH (**R**egistration, **E**valuation, **A**uthorization and Restriction of **CH**emicals) directive. For import into the European Union, Timken can sell and provide only those lubricants and greases that are registered with ECHA (**E**uropean **CH**emical **A**gency). For further information, please contact your Timken engineer.

STORAGE

Timken suggests the following storage guidelines for our finished products (bearings, components and assemblies, referred to as "products"):

- Unless directed otherwise by Timken, products should be kept in their original packaging until they are ready to be placed into service.
- Do not remove or alter any labels or stencil markings on the packaging.
- Products should be stored in such a way that the packaging is not pierced, crushed or otherwise damaged.
- After a product is removed from its packaging, it should be placed into service as soon as possible.
- When removing a product that is not individually packaged from a bulk pack container, the container should be resealed immediately after the product is removed.
- Do not use product that has exceeded its shelf life as defined in the Timken shelf life guidelines statement.
- The storage area temperature should be maintained between 0° C (32° F) and 40° C (104° F); temperature fluctuations should be minimized.
- The relative humidity should be maintained below 60 percent and the surfaces should be dry.
- The storage area should be kept free from airborne contaminants such as, but not limited to, dust, dirt, harmful vapors, etc.
- The storage area should be isolated from undue vibration.
- Extreme conditions of any kind should be avoided.

Due to the fact that Timken is not familiar with your particular storage conditions, we strongly suggest following these guidelines. However, you may be required by circumstances or applicable government requirements to adhere to stricter storage requirements.

Most bearing components typically ship protected with a corrosion-preventive compound that is not a lubricant. These components may be used in oil-lubricated applications without removal of the corrosion-preventive compound. When using some specialized grease lubrications, we advise you to remove the corrosion-preventive compound before packing the bearing components with suitable grease.

We pre-pack most housed unit types in this catalog with general-purpose grease suitable for their normal applications. It may be necessary for you to frequently replenish the grease for optimum performance.

Be careful in selecting lubrication, however, since different lubricants are often incompatible. You may order housed units pre-lubricated with a specified lubrication.

When you receive a bearing or housed unit shipment, do not remove products from their packaging until they are ready for mounting so they do not become corroded or contaminated.

Store bearings and housed units in an appropriate atmosphere so they remain protected for the intended period.

WARNING

Failure to observe the following warnings could create a risk of death or serious injury.

Proper maintenance and handling practices are critical. Failure to follow selection recommendations and installation instructions and to maintain proper lubrication can result in equipment failure.

Overheated bearings can ignite explosive atmospheres. Special care must be taken to properly select, install, maintain, and lubricate housed unit bearings that are used in or near atmospheres that may contain explosive levels of combustible gases or accumulations of dust such from grain, coal, or other combustible materials. Consult your equipment designer or supplier for installation and maintenance instructions.

CAUTION

Failure to follow these cautions could create a risk of injury.

Do not use damaged housed units. The use of a damaged housed unit can result in equipment damage and/or injury.

CAUTION

Failure to follow these cautions may result in property damage.

If hammer and bar are used for installation or removal of a part, use a mild steel bar (e.g., 1010 or 1020 grade). Mild steel bars are less likely to cause release of high-speed fragments from the hammer, bar or the part being removed.

Warnings for this product line are in this catalog and posted on www.timken.com/en-us/products/warnings/Pages/TimkenHousedUnitWarnings.aspx.

NOTE

Do not use excessive force when mounting or dismounting the unit.

Follow all tolerance, fit, and torque recommendations.

Always follow the Original Equipment Manufacturer's installation and maintenance guidelines.

Ensure proper alignment.

Never weld housed units.

Do not heat components with an open flame.

Do not operate at bearing temperatures above 121° C (250° F).

D

TIMKEN® SAF SPLIT-BLOCK HOUSED UNITS

Timken's split-block spherical pillow blocks combine rugged cast-iron or cast-steel housings with high-capacity spherical roller bearings to meet the toughest demands of heavy industry. The convenient split-housing design simplifies assembly and service. Each pillow block contains an advanced-design spherical roller bearing with improved geometry and raceway finish for optimal load capacity and service life. Timken manufactures pillow blocks in two main styles: SAF and SDAF. The larger SDAF block is suggested for extremely heavy duty applications.

Updates are made periodically to this catalog. Visit www.timken.com for the most recent version of the Timken® Housed Unit Catalog.

TYPICAL INDUSTRIES AND APPLICATIONS

Common uses include processing and material handling equipment found in many industries, including power generation (coal), mining, aggregate, cement, metal mills, pulp, paper and other forestry operations, water treatment and food processing. Applications include conveyors, movable bridges/heavy structures, industrial fans and blowers.

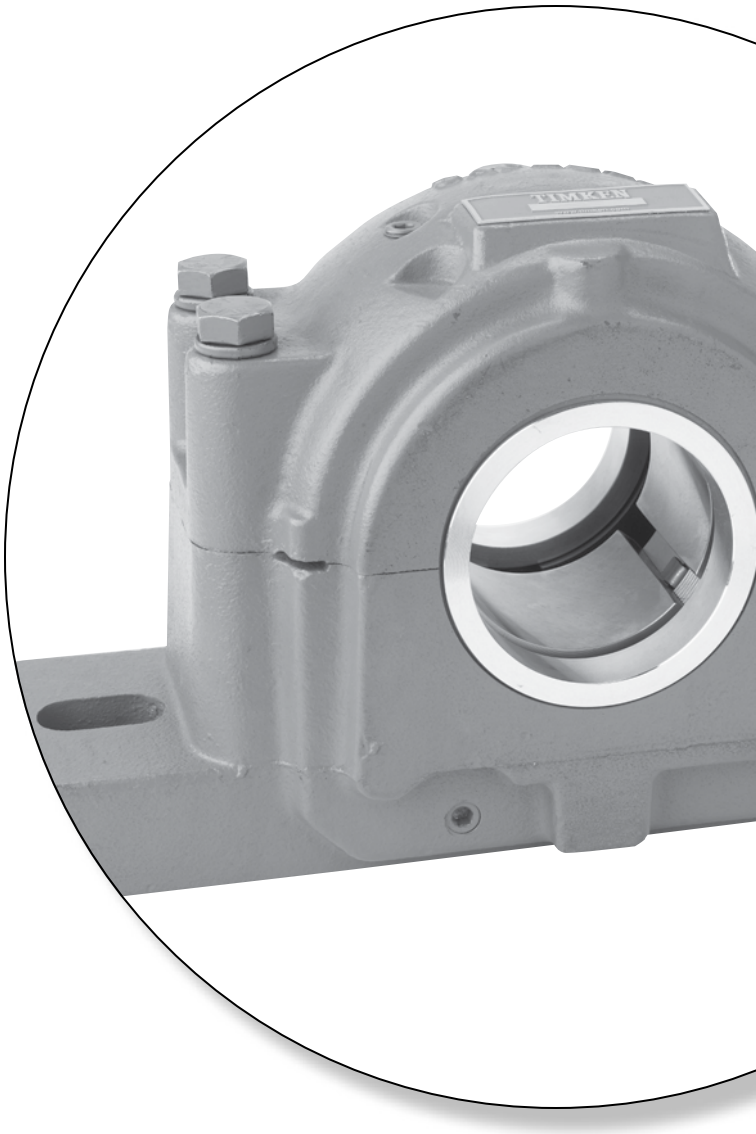

WARNING

Failure to observe the following warnings could create a risk of death or serious injury.

Proper maintenance and handling practices are critical. Always follow installation instructions and maintain proper lubrication.

Overheated bearings can ignite explosive atmospheres. Special care must be taken to properly select, install, maintain, and lubricate housed unit bearings that are used in or near atmospheres that may contain explosive levels of combustible gases or accumulations of dust such as from grain, coal, or other combustible materials. Consult your equipment designer or supplier for installation and maintenance instructions.

CAUTION

Failure to follow these cautions could create a risk of injury.

Do not use damaged housed units. The use of a damaged housed unit can result in equipment damage and/or injury.

CAUTION

Failure to follow these cautions may result in property damage.

If hammer and bar are used for installation or removal of a part, use a mild steel bar (e.g., 1010 or 1020 grade). Mild steel bars are less likely to cause release of high-speed fragments from the hammer, bar or the part being removed.

Warnings for this product line are in this catalog and posted on www.timken.com/en-us/products/warnings/Pages/TimkenHousedUnitWarnings.aspx.

NOTE

Do not use excessive force when mounting or dismounting the unit.

Follow all tolerance, fit and torque recommendations.

Always follow the Original Equipment Manufacturer's installation and maintenance guidelines.

Ensure proper alignment.

Never weld housed units.

Do not heat components with an open flame.

Do not operate at bearing temperatures above 121°C (250°F).

DISCLAIMER

This catalog is provided solely to give you analysis tools and data to assist you in your product selection. Product performance is affected by many factors beyond the control of Timken. Therefore, you must validate the suitability and feasibility of all product selections for your applications.

Timken products are sold subject to Timken terms and conditions of sale, which include our limited warranty and remedy. You can find these at http://www.timken.com/en-us/purchase/Pages/TermsandConditionsofSale.aspx.

Please consult with your Timken engineer for more information and assistance.

Every reasonable effort has been made to ensure the accuracy of the information in this writing, but no liability is accepted for errors, omissions or for any other reason.

Updates are made periodically to this catalog. Visit www.timken.com for the most recent version of the Timken® Housed Unit Catalog.

ENGINEERING

The following topics are covered within this engineering section:

- Spherical roller bearing design types.
- Shaft fitting practice and mounting recommendations.

This engineering section is not intended to be comprehensive, but does serve as a useful guide in spherical roller bearing and SAF pillow block housing selection.

To view the complete engineering catalog, please visit www.timken.com. To order the catalog, please contact your Timken engineer and request a copy of the Timken Engineering Manual, order number 10424.

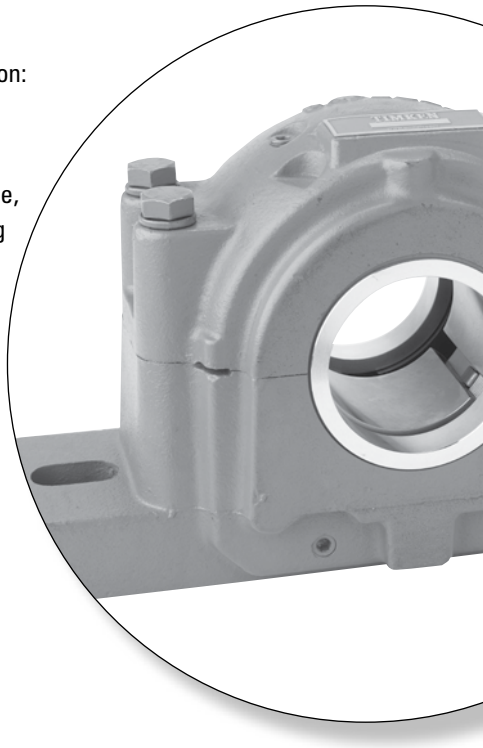

RADIAL SPHERICAL ROLLER BEARING TYPES AND CAGES

The principle styles of radial spherical roller bearings that Timken offers are:

- ≤280 mm bore: EJ, EM and EMB
- >280 mm bore: YM and YMB

Above suffixes correspond to different types of designs depending on a bearing size and geometry. Main differences are the cage type used in the assembly. Spherical roller bearings with an EJ cage suffix are fitted with a stamped-steel cage. YM/EM/YMB suffixes are used with brass cage designs.

The newly redesigned Timken® EJ, EM and EMB bearings offer higher load ratings, increased thermal speed ratings and reduced operating temperatures compared to the previous offering.

In addition to these improvements, cage designs vary between the different styles as noted below.

Style	Cage Design
EJ	Land-riding steel cage; one per row
EM/YM	Roller-riding one-piece brass cage
EMB/YMB	Land-riding one-piece brass cage

Most Timken® spherical roller bearings are available with a cylindrical bore as well as a tapered bore. Tapered bore bearing part numbers are designated with a K suffix.

METRIC SYSTEM TOLERANCES

Spherical roller bearings are manufactured to a number of specifications, with each having classes that define tolerances on dimensions such as bore, O.D., width and runout. Metric bearings have been manufactured to corresponding standard negative tolerances.

The following table summarizes the different specifications and classes for spherical roller bearings and other available Timken bearing lines. For the purposes of this catalog, ISO specifications are shown for spherical roller bearings.

Boundary dimension tolerances for spherical roller bearing usage are listed in the following tables. These tolerances are provided for use in selecting bearings for general applications, in conjunction with the bearing mounting and fitting practices offered in later sections.

TABLE D-1. BEARING SPECIFICATIONS AND CLASSES

System	Specification	Bearing Type	Standard Bearing Class		Precision Bearing Class			
Metric	ISO/DIN	All Bearing Types	P0	P6	P5	P4	P2	---
Imperial	ABMA	Spherical	RBEC 1	RBEC 3	RBEC 5	RBEC 7	RBEC 9	---

Standard Timken radial spherical roller bearings maintain normal tolerances according to ISO 492. Tables D-2 and D-3 list the critical tolerances for these bearing types. Timken SAF housings are supplied with bearings that conform to ISO P0, or standard tolerances.

The term deviation is defined as the difference between a single ring dimension and the nominal dimension. For metric tolerances, the nominal dimension is at a +0 mm (0 in.) tolerance. The deviation is the tolerance range for the listed parameter. Variation is defined as the difference between the largest and smallest measurements of a given parameter for an individual ring.

TABLE D-2. SPHERICAL ROLLER BEARING TOLERANCES – INNER RING (METRIC)[1]

Bearing Bore		Bore Deviation[2] Δ_{dmp}			Width Variation V_{BS}			Radial Runout K_{ia}			Face Runout with Bore S_d	Axial Runout S_{ia}	Width Deviation Inner & Outer Rings[2] Δ_{Bs} and Δ_{Cs}	
Over	Incl.	P0	P6	P5	P0	P6	P5	P0	P6	P5	P5	P5	P0, P6	P5
mm in.	**mm** in.	**mm** in.	**mm** in.	**mm** in.	**mm** in.	**mm** in.	**mm** in.	**mm** in.	**mm** in.	**mm** in.	**mm** in.	**mm** in.	**mm** in.	**mm** in.
2.5000 0.0984	**10.000** 0.3937	**-0.008** -0.0003	**-0.007** -0.0003	**-0.005** -0.0002	**0.015** 0.0006	**0.015** 0.0006	**0.005** 0.0002	**0.010** 0.0004	**0.006** 0.0002	**0.004** 0.0002	**0.007** 0.0003	**0.007** 0.0003	**-0.120** -0.0047	**-0.040** -0.0157
10.000 0.3937	**18.000** 0.7087	**-0.008** -0.0003	**-0.007** -0.0003	**-0.005** -0.0002	**0.020** 0.0008	**0.020** 0.0008	**0.005** 0.0002	**0.010** 0.0004	**0.007** 0.0003	**0.004** 0.0002	**0.007** 0.0003	**0.007** 0.0003	**-0.120** -0.0047	**-0.080** -0.0031
18.000 0.7087	**30.000** 1.1811	**-0.010** -0.0004	**-0.008** -0.0003	**-0.006** -0.0002	**0.020** 0.0008	**0.020** 0.0008	**0.005** 0.0002	**0.013** 0.0005	**0.008** 0.0003	**0.004** 0.0002	**0.008** 0.0003	**0.008** 0.0003	**-0.120** -0.0047	**-0.120** -0.0047
30.000 1.1811	**50.000** 1.9685	**-0.012** -0.0005	**-0.010** -0.0004	**-0.008** -0.0003	**0.020** 0.0008	**0.020** 0.0008	**0.005** 0.0002	**0.015** 0.0006	**0.010** 0.0004	**0.005** 0.0002	**0.008** 0.0003	**0.008** 0.0003	**-0.120** -0.0047	**-0.120** -0.0047
50.000 1.9685	**80.000** 3.1496	**-0.015** -0.0006	**-0.012** -0.0005	**-0.009** -0.0004	**0.025** 0.0010	**0.025** 0.0010	**0.006** 0.0002	**0.020** 0.0008	**0.010** 0.0004	**0.005** 0.0002	**0.008** 0.0003	**0.008** 0.0003	**-0.150** -0.0059	**-0.150** -0.0059
80.000 3.1496	**120.000** 4.7244	**-0.020** -0.0008	**-0.015** -0.0006	**-0.010** -0.0004	**0.025** 0.0010	**0.025** 0.0010	**0.007** 0.0003	**0.025** 0.0010	**0.013** 0.0005	**0.006** 0.0002	**0.009** 0.0004	**0.009** 0.0004	**-0.200** -0.0079	**-0.200** -0.0079
120.000 4.7244	**150.000** 5.9055	**-0.025** -0.0010	**-0.018** -0.0007	**-0.013** -0.0005	**0.030** 0.0012	**0.030** 0.0012	**0.008** 0.0003	**0.030** 0.0012	**0.018** 0.0007	**0.008** 0.0003	**0.010** 0.0004	**0.010** 0.0004	**-0.250** -0.0098	**-0.250** -0.0098
150.000 5.9055	**180.000** 7.0866	**-0.025** -0.0010	**-0.018** -0.0007	**-0.013** -0.0005	**0.030** 0.0012	**0.030** 0.0012	**0.008** 0.0003	**0.030** 0.0012	**0.018** 0.0007	**0.008** 0.0003	**0.010** 0.0004	**0.010** 0.0004	**-0.250** -0.0098	**-0.250** -0.0098
180.000 7.0866	**250.000** 9.8425	**-0.030** -0.0012	**-0.022** -0.0009	**-0.015** -0.0006	**0.030** 0.0012	**0.030** 0.0012	**0.010** 0.0004	**0.040** 0.0016	**0.020** 0.0008	**0.010** 0.0004	**0.011** 0.0004	**0.013** 0.0005	**-0.300** -0.0018	**-0.300** -0.0018
250.000 9.8425	**315.000** 12.4016	**-0.035** -0.0014	**-0.025** -0.0010	**-0.018** -0.0007	**0.035** 0.0014	**0.035** 0.0014	**0.013** 0.0005	**0.050** 0.0020	**0.025** 0.0010	**0.013** 0.0005	**0.013** 0.0005	**0.015** 0.0006	**-0.350** -0.0138	**-0.350** -0.0138
315.000 12.4016	**400.000** 15.7480	**-0.040** -0.0016	**-0.030** -0.0012	**-0.023** -0.0009	**0.040** 0.0016	**0.040** 0.0016	**0.015** 0.0006	**0.060** 0.0024	**0.030** 0.0012	**0.015** 0.0006	**0.015** 0.0006	**0.020** 0.0008	**-0.400** -0.0157	**-0.400** -0.0157
400.000 15.7480	**500.000** 19.6850	**-0.045** -0.0018	**-0.035** -0.0014	–	**0.050** 0.0020	**0.045** 0.0018	–	**0.065** 0.0026	**0.035** 0.0014	–	–	–	**-0.450** -0.0177	–
500.000 19.6850	**630.000** 24.8031	**-0.050** -0.0020	**-0.040** -0.0016	–	**0.060** 0.0024	**0.050** 0.0020	–	**0.070** 0.0028	**0.040** 0.0016	–	–	–	**-0.500** -0.0197	–
630.000 24.8031	**800.000** 31.4961	**-0.075** -0.0030	–	–	**0.070** 0.0028	–	–	**0.080** 0.0031	–	–	–	–	**-0.750** -0.0295	–

[1]Symbol definitions are found on pages 32-33 of the Timken Engineering Manual (order number 10424).
[2]Tolerance range is from +0 to value listed.
NOTE: Tolerance and shaft diameters are shown in the table as variances from nominal bearing bore.

TABLE D-3. SPHERICAL ROLLER BEARING TOLERANCES – OUTER RING (METRIC)[1]

Bearing O.D.		Outside Deviation[2]			Width Variation		Radial Runout			Axial Runout	Outside Diameter Runout With Face
		Δ_{Dmp}			V_{CS}		K_{ea}			S_{ea}	S_D
Over	Incl.	P0	P6	P5	P0	P6	P0	P6	P5	P5	P5
mm in.	**mm** in.	**mm** in.	**mm** in.	**mm** in.	**mm** in.	**mm** in.	**mm** in.	**mm** in.	**mm** in.	**mm** in.	**mm** in.
0.000 0.0000	**18.000** 0.7087	**-0.008** -0.0003	**-0.007** -0.0003	**-0.005** -0.0002	**0.015** 0.0006	**0.005** 0.0002	**0.015** 0.0006	**0.008** 0.0003	**0.005** 0.0002	**0.008** 0.0003	**0.008** 0.0003
18.000 0.7087	**30.000** 1.1811	**-0.009** -0.0004	**-0.008** -0.0003	**-0.006** -0.00024	**0.020** 0.0008	**0.005** 0.0002	**0.015** 0.0006	**0.009** 0.0004	**0.006** 0.00024	**0.008** 0.0003	**0.008** 0.0003
30.000 1.1811	**50.000** 1.9685	**-0.011** -0.0004	**-0.009** -0.0004	**-0.007** -0.0003	**0.020** 0.0008	**0.005** 0.0002	**0.020** 0.0008	**0.010** 0.0004	**0.007** 0.0003	**0.008** 0.0003	**0.008** 0.0003
50.000 1.9685	**80.000** 3.1496	**-0.013** -0.0005	**-0.011** -0.0004	**-0.009** -0.0004	**0.025** 0.0010	**0.006** 0.00024	**0.025** 0.0010	**0.013** 0.0005	**0.008** 0.0003	**0.010** 0.0004	**0.008** 0.0003
80.000 3.1496	**120.000** 4.7244	**-0.015** -0.0006	**-0.013** -0.0005	**-0.010** -0.0004	**0.025** 0.0010	**0.008** 0.0003	**0.035** 0.0014	**0.018** 0.0007	**0.010** 0.0004	**0.011** 0.0004	**0.009** 0.0004
120.000 4.7244	**150.000** 5.9055	**-0.018** -0.0007	**-0.015** -0.0006	**-0.011** -0.0004	**0.030** 0.0012	**0.008** 0.0003	**0.040** 0.0016	**0.020** 0.0008	**0.011** 0.0004	**0.013** 0.0005	**0.010** 0.0004
150.000 5.9055	**180.000** 7.0866	**-0.025** -0.0010	**-0.018** -0.0007	**-0.013** -0.0005	**0.030** 0.0012	**0.008** 0.0003	**0.045** 0.0018	**0.023** 0.0009	**0.013** 0.0005	**0.014** 0.0006	**0.010** 0.0004
180.000 7.0866	**250.000** 9.8425	**-0.030** -0.0012	**-0.020** -0.0008	**-0.015** -0.0006	**0.030** 0.0012	**0.010** 0.0004	**0.050** 0.0020	**0.025** 0.0010	**0.015** 0.0006	**0.015** 0.0006	**0.011** 0.0004
250.000 9.8425	**315.000** 12.4016	**-0.035** -0.0014	**-0.025** -0.0010	**-0.018** -0.0007	**0.035** 0.0014	**0.011** 0.0004	**0.060** 0.0024	**0.030** 0.0012	**0.018** 0.0007	**0.018** 0.0007	**0.013** 0.0005
315.000 12.4016	**400.000** 15.7480	**-0.040** -0.0016	**-0.028** -0.0011	**-0.020** -0.0008	**0.040** 0.0016	**0.013** 0.0005	**0.070** 0.0028	**0.035** 0.0014	**0.020** 0.0008	**0.020** 0.0008	**0.013** 0.0005
400.000 15.7480	**500.000** 19.6850	**-0.045** -0.0018	**-0.033** -0.0013	**-0.023** -0.0009	**0.045** 0.0018	**0.015** 0.0006	**0.080** 0.0031	**0.040** 0.0016	**0.023** 0.0009	**0.023** 0.0009	**0.015** 0.0006
500.000 19.6850	**630.000** 24.8031	**-0.050** -0.0020	**-0.038** -0.0015	**-0.028** -0.0011	**0.050** 0.0020	**0.018** 0.0007	**0.100** 0.0039	**0.050** 0.0020	**0.025** 0.0010	**0.025** 0.0010	**0.018** 0.0007
630.000 24.8031	**800.000** 31.4961	**-0.075** -0.0030	**-0.045** -0.0018	**-0.035** -0.0014	–	**0.020** 0.0008	**0.120** 0.0047	**0.060** 0.0024	**0.030** 0.0012	**0.030** 0.0012	**0.020** 0.0008
800.000 31.4961	**1000.000** 39.3701	**-0.100** -0.0040	**-0.060** -0.0024	–	–	–	**0.140** 0.0055	**0.075** 0.0030	–	–	–
1000.000 39.3701	**1250.000** 49.2126	**-0.125** -0.0050	–	–	–	–	**0.160** 0.0063	– –	–	–	–

[1]Symbol definitions are found on pages 32-33 of the Timken Engineering Manual (order number 10424).
[2]Tolerance range is from +0 to value listed.
NOTE: Tolerance and shaft diameters are shown in the table as variances from nominal bearing bore.

SPHERICAL ROLLER BEARING MOUNTING, FITTING, SETTING AND INSTALLATION

MOUNTING

Spherical roller bearings can be mounted individually, but most often are mounted in combination with another spherical roller bearing or a cylindrical roller bearing.

With spherical roller bearings, typically one bearing is fixed axially and the other is mounted with loose fits and axial space. This allows movement or float for environmental conditions such as uneven thermal growth between shaft and housing. In SAF housings, a stabilizing ring, sometimes called a locating ring, is provided. When this ring is installed in the assembly, it creates a fixed bearing. When it is removed, and the bearing is properly located in the housing, the bearing can float freely.

Fig. D-1 shows a fixed SAF housing with a stabilizing ring installed and a float bearing without the stabilizing ring.

FITTING PRACTICE

Tables D-6 through D-8 on pages D-15 through D-21 list the recommended fitting practice for spherical roller bearing inner rings on shafts. The tables assume:

- The bearing is of normal precision.
- The shaft is solid and made from steel.
- The bearing seats are ground or accurately turned to less than approximately 1.6 Ra finish.

The suggested fit symbols are in accordance with ISO 286. For help with recommended fitting practice, contact your Timken engineer.

As a general guideline, rotating inner rings should be applied with an interference fit. Loose fits may permit the inner rings to creep or turn, and wear the shaft and the backing shoulder. This wear may result in excessive bearing looseness and possible bearing and shaft damage. Additionally, abrasive metal particles resulting from creep or turning may enter into the bearing and cause damage and vibration.

The load conditions and bearing envelope dimensions should be used to select the suggested shaft fit from the tables.

Timken SAF housings are supplied with a predetermined loose fit practice for the bearing O.D. Contact your Timken engineer if you require the specific fit practice used for a given SAF housing.

WARNING

Failure to observe the following warnings could create a risk of death or serious injury.

Proper maintenance and handling practices are critical. Always follow installation instructions and maintain proper lubrication.

Overheated bearings can ignite explosive atmospheres. Special care must be taken to properly select, install, maintain, and lubricate housed unit bearings that are used in or near atmospheres that may contain explosive levels of combustible gases or accumulations of dust such as from grain, coal, or other combustible materials. Consult your equipment designer or supplier for installation and maintenance instructions.

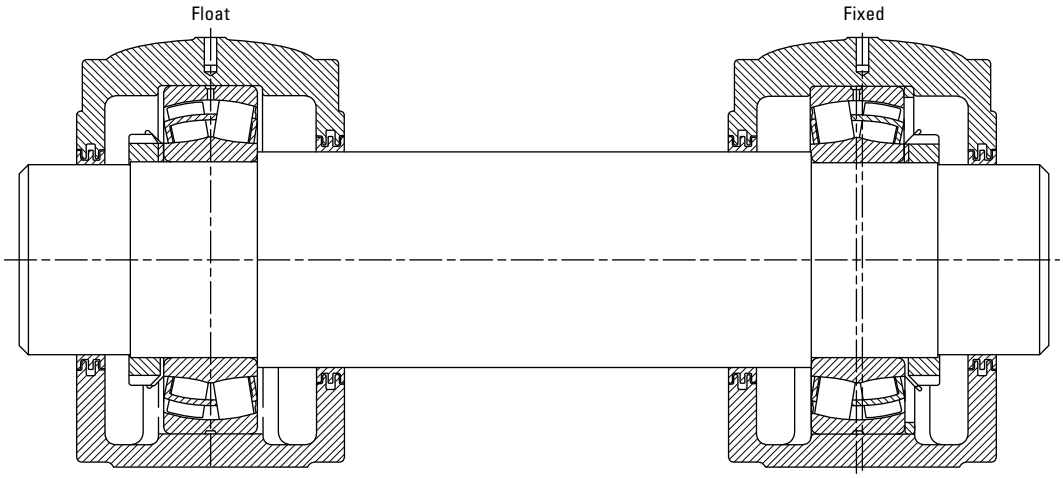

Fig. D-1. Spherical roller bearing direct mounting.

TAPERED BORE DESIGNS

Typically, tapered bore bearings are selected to simplify shaft mounting and dismounting. Since the spherical roller bearing is not separable, mounting can be simplified by use of an adapter sleeve with a cylindrical bore and tapered O.D. A tapered bore roller bearing also can be mounted directly onto a tapered shaft.

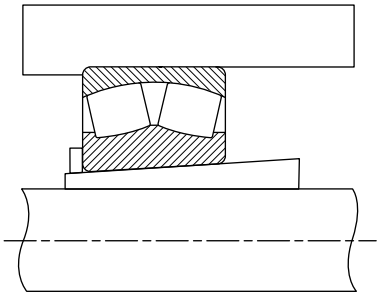

Fig. D-2. Spherical roller bearing mounted with an adapter sleeve.

Bearings with a tapered bore typically require a tighter fit on the shaft than bearings with a cylindrical bore. A locknut is typically used to drive the inner ring up a tapered shaft sleeve. The locknut position is then secured by use of a lockwasher or lockplate. Timken offers a wide range of accessories to ease the assembly of spherical roller bearings with a tapered bore (see page D-11). For approximating the clearance loss for axial drive-up, an 85 percent radial loss approximation can be used. That is, the radial clearance loss per axial drive-up can roughly be approximated as 71 µm/mm for a 1:12 tapered. Table D-5 on page D-10 provides a direct relation between suggested RIC (radial internal clearance) reduction due to installation and the corresponding axial displacement of the inner ring.

SETTING

To achieve appropriate operating clearance, attention must be paid to the effects that fitting practice and thermal gradients have within the bearing.

FITTING PRACTICE

- An interference fit between the inner ring and a solid steel shaft will reduce the radial clearance within the bearing by approximately 80 percent of the fit.
- Spherical roller bearings with a tapered bore require a slightly greater interference fit on the shaft than a cylindrical bore bearing.

NOTE

It is critical to select the RIC that allows for this reduction.

THERMAL GRADIENTS

- Thermal gradients within the bearing are primarily a function of the bearing rotational speed. As speed increases, thermal gradients increase, thermal growth occurs and the radial clearance is reduced.
- As a rule of thumb, radial clearance should be increased for speeds in excess of 70 percent of the speed rating.

For help selecting the correct radial internal clearance for your application, consult with your Timken engineer.

Radial internal clearance tolerances are listed in tables D-4 and D-5 for spherical roller bearings.

Spherical roller bearings are ordered with a specified standard or non-standard radial internal clearance value. The standard radial internal clearances are designated as C2, C0 (normal), C3, C4 or C5 and are in accordance with ISO 5753. C2 represents the minimum clearance and C5 represents the maximum clearance. Non-standardized values also are available by special request.

The clearance required for a given application depends on the desired operating precision, the rotational speed of the bearing, and the fitting practice used. SAF housings are supplied with a C3 clearance bearing, though other clearances may be ordered for specific applications, such as a C4 clearance for a paper machine dryer. Typically, larger clearance reduces the operating load zone of the bearing, increases the maximum roller load, and reduces the bearing's expected life. However, a spherical roller bearing that has been put into a preload condition can experience premature bearing damage caused by excessive heat generation and/or material fatigue. As a general guideline, spherical roller bearings should not operate in a preloaded condition.

TABLE D-4. RADIAL INTERNAL CLEARANCE LIMITS – SPHERICAL ROLLER BEARINGS – CYLINDRICAL BORE

Bore (Nominal)		Cylindrical Bore					
			Normal CO		C4		
			Min.	Max.	Min.	Max.	
		C2		C3		C5	
Over	Incl.	Min.	Max.	Min.	Max.	Min.	Max.
mm in.	**mm** in.	**mm** in.	**mm** in.	**mm** in.	**mm** in.	**mm** in.	**mm** in.
20 0.9449	**30** 1.1811	**0.015** 0.0006	**0.025** 0.001	**0.04** 0.0016	**0.055** 0.0022	**0.075** 0.003	**0.095** 0.0037
30 1.1811	**40** 1.5748	**0.015** 0.0006	**0.03** 0.0012	**0.045** 0.0018	**0.06** 0.0024	**0.08** 0.0031	**1** 0.0039
40 1.5748	**50** 1.9685	**0.02** 0.0008	**0.035** 0.0014	**0.055** 0.0022	**0.075** 0.003	**0.1** 0.0039	**0.125** 0.0049
50 1.9685	**65** 2.5591	**0.02** 0.0008	**0.04** 0.0016	**0.065** 0.0026	**0.09** 0.0035	**0.12** 0.0047	**0.15** 0.0059
65 2.5591	**80** 3.1496	**0.03** 0.0012	**0.05** 0.002	**0.08** 0.0031	**0.11** 0.0043	**0.145** 0.0057	**0.18** 0.0071
80 3.1496	**100** 3.9370	**0.035** 0.0014	**0.06** 0.0024	**0.1** 0.0039	**0.135** 0.0053	**0.18** 0.0071	**0.225** 0.0089
100 3.9370	**120** 4.7244	**0.04** 0.0016	**0.075** 0.003	**0.12** 0.0047	**0.16** 0.0063	**0.21** 0.0083	**0.26** 0.0102
120 4.7244	**140** 5.5118	**0.05** 0.002	**0.095** 0.0037	**0.145** 0.0057	**0.19** 0.0075	**0.24** 0.0094	**0.3** 0.0118
140 5.5118	**160** 6.2992	**0.06** 0.0024	**0.11** 0.0043	**0.17** 0.0067	**0.22** 0.0087	**0.28** 0.011	**0.35** 0.0138
160 6.2992	**180** 7.0866	**0.065** 0.0026	**0.12** 0.0047	**0.18** 0.0071	**0.24** 0.0094	**0.31** 0.0122	**0.39** 0.0154
180 7.0866	**200** 7.8740	**0.07** 0.0028	**0.13** 0.0051	**0.2** 0.0079	**0.26** 0.0102	**0.34** 0.0134	**0.43** 0.0169
200 7.8740	**225** 8.8582	**0.08** 0.0031	**0.14** 0.0055	**0.22** 0.0087	**0.29** 0.0114	**0.38** 0.015	**0.47** 0.0185
225 8.8582	**250** 9.8425	**0.09** 0.0035	**0.15** 0.0059	**0.24** 0.0094	**0.32** 0.0126	**0.42** 0.0165	**0.52** 0.0205
250 9.8425	**280** 11.0236	**0.1** 0.0039	**0.17** 0.0067	**0.26** 0.0102	**0.35** 0.0138	**0.46** 0.0181	**0.57** 0.0224
280 11.0236	**315** 12.4016	**0.11** 0.0043	**0.19** 0.0075	**0.28** 0.011	**0.37** 0.0146	**0.5** 0.0197	**0.63** 0.0248
315 12.4016	**355** 13.9764	**0.12** 0.0047	**0.2** 0.0079	**0.31** 0.0122	**0.41** 0.0161	**0.55** 0.0217	**0.69** 0.0272
355 13.9764	**400** 15.7480	**0.13** 0.0051	**0.22** 0.0087	**0.34** 0.0134	**0.45** 0.0177	**0.6** 0.0236	**0.75** 0.0295
400 15.7480	**450** 17.7165	**0.14** 0.0055	**0.24** 0.0094	**0.37** 0.0146	**0.5** 0.0197	**0.66** 0.026	**0.82** 0.0323
450 17.7165	**500** 19.6850	**0.14** 0.0055	**0.26** 0.0102	**0.41** 0.0161	**0.55** 0.0217	**0.72** 0.0283	**0.9** 0.0354
500 19.6850	**560** 22.0472	**0.15** 0.0059	**0.28** 0.011	**0.44** 0.0173	**0.6** 0.0236	**0.78** 0.0307	**1** 0.0394
560 22.0472	**630** 24.8031	**0.17** 0.0067	**0.31** 0.0122	**0.48** 0.0189	**0.65** 0.0256	**0.85** 0.0335	**1.1** 0.0433
630 24.8031	**710** 27.9528	**0.19** 0.0075	**0.35** 0.0138	**0.53** 0.0209	**0.7** 0.0276	**0.92** 0.0362	**1.19** 0.0469
710 27.9528	**800** 31.4961	**0.21** 0.0083	**0.39** 0.0154	**0.58** 0.0228	**0.77** 0.0303	**1.01** 0.0398	**1.3** 0.0512
800 31.4961	**900** 35.4331	**0.23** 0.0091	**0.43** 0.0169	**0.65** 0.0256	**0.86** 0.0339	**1.12** 0.0441	**1.44** 0.0567
900 35.4331	**1000** 39.3701	**0.26** 0.0102	**0.48** 0.0189	**0.71** 0.028	**0.93** 0.0366	**1.22** 0.048	**1.57** 0.0618

NOTE: Tolerance and shaft diameters are shown in the table as variances from nominal bearing bore.

TABLE D-5. RADIAL INTERNAL CLEARANCE LIMITS – SPHERICAL ROLLER BEARINGS – TAPERED BORE

Bore (Nominal)		Tapered Bore						Suggested Reduction of RIC Due to Installation		Axial Displacement of Inner Ring for RIC Reduction – Tapered Shaft[1][2]				Suggested RIC After Installation[1]
			Normal CO		C4									
			Min.	Max.	Min.	Max.								
		C2		C3		C5				Taper 1:12		Taper 1:30		
Over	Incl.	Min.	Max.	Min.	Max.	Min.	Max.	Min.	Max.	Min.	Max.	Min.	Max.	Min.
mm in.	mm in.	mm in.	mm in.	mm in.	mm in.	mm in.	mm in.	mm in.	mm in.	mm in.	mm in.	mm in.	mm in.	mm in.
20 0.9449	**30** 1.1811	**0.02** 0.0008	**0.03** 0.0012	**0.04** 0.0016	**0.055** 0.0022	**0.075** 0.003	**0.095** 0.0037	**0.015** 0.0006	**0.02** 0.0008	**0.23** 0.0091	**0.30** 0.0118	–	–	**0.015** 0.0006
30 1.1811	**40** 1.5748	**0.025** 0.001	**0.035** 0.0014	**0.05** 0.002	**0.065** 0.0026	**0.085** 0.0033	**0.105** 0.0041	**0.02** 0.0008	**0.025** 0.001	**0.30** 0.0118	**0.38** 0.0150	–	–	**0.015** 0.0006
40 1.5748	**50** 1.9685	**0.03** 0.0012	**0.045** 0.0018	**0.06** 0.0024	**0.08** 0.0031	**0.1** 0.0039	**0.13** 0.0051	**0.025** 0.001	**0.03** 0.0012	**0.38** 0.0150	**0.46** 0.0181	–	–	**0.02** 0.0008
50 1.9685	**65** 2.5591	**0.04** 0.0016	**0.055** 0.0022	**0.075** 0.003	**0.095** 0.0037	**0.12** 0.0047	**0.16** 0.0063	**0.03** 0.0012	**0.038** 0.0015	**0.46** 0.0181	**0.56** 0.0220	–	–	**0.025** 0.001
65 2.5591	**80** 3.1496	**0.05** 0.002	**0.07** 0.0028	**0.095** 0.0037	**0.12** 0.0047	**0.15** 0.0059	**0.2** 0.0079	**0.038** 0.0015	**0.051** 0.002	**0.56** 0.0220	**0.76** 0.0299	–	–	**0.025** 0.001
80 3.1496	**100** 3.9370	**0.055** 0.0022	**0.08** 0.003	**0.11** 0.0043	**0.14** 0.0055	**0.18** 0.0071	**0.23** 0.0091	**0.046** 0.0018	**0.064** 0.0025	**0.68** 0.0268	**0.97** 0.0382	–	–	**0.036** 0.0014
100 3.9370	**120** 4.7244	**0.065** 0.0026	**0.1** 0.0039	**0.135** 0.0053	**0.17** 0.0067	**0.22** 0.0087	**0.28** 0.011	**0.051** 0.002	**0.071** 0.0028	**0.76** 0.0299	**1.07** 0.0421	**1.90** 0.0748	**2.54** 0.1000	**0.051** 0.002
120 4.7244	**140** 5.5118	**0.08** 0.0031	**0.12** 0.0047	**0.16** 0.0063	**0.2** 0.0079	**0.26** 0.0102	**0.33** 0.013	**0.064** 0.0025	**0.089** 0.0035	**0.89** 0.0350	**1.27** 0.0500	**2.29** 0.0902	**3.05** 0.1201	**0.056** 0.0022
140 5.5118	**160** 6.2992	**0.09** 0.0035	**0.13** 0.0051	**0.18** 0.0071	**0.23** 0.0091	**0.3** 0.0118	**0.38** 0.015	**0.076** 0.003	**0.102** 0.004	**1.14** 0.0449	**1.52** 0.0598	**2.67** 0.1051	**3.43** 0.1350	**0.056** 0.0022
160 6.2992	**180** 7.0866	**0.1** 0.0039	**0.14** 0.0055	**0.2** 0.0079	**0.26** 0.0102	**0.34** 0.0134	**0.43** 0.0169	**0.076** 0.003	**0.114** 0.0045	**1.14** 0.0449	**1.65** 0.0650	**2.67** 0.1051	**4.06** 0.1598	**0.061** 0.0024
180 7.0866	**200** 7.8740	**0.11** 0.0043	**0.16** 0.0063	**0.22** 0.0087	**0.29** 0.0114	**0.37** 0.0146	**0.47** 0.0185	**0.089** 0.0035	**0.127** 0.005	**1.40** 0.0551	**1.90** 0.0748	**3.05** 0.1201	**4.45** 0.1752	**0.071** 0.0028
200 7.8740	**225** 8.8582	**0.12** 0.0047	**0.18** 0.0071	**0.25** 0.0098	**0.32** 0.0126	**0.41** 0.0161	**0.52** 0.0205	**0.102** 0.004	**0.14** 0.0055	**1.52** 0.0598	**2.03** 0.0799	**3.56** 0.1402	**4.83** 0.1902	**0.076** 0.003
225 8.8582	**250** 9.8425	**0.14** 0.0055	**0.2** 0.0079	**0.27** 0.0106	**0.35** 0.0138	**0.45** 0.0177	**0.57** 0.0224	**0.114** 0.0045	**0.152** 0.006	**1.78** 0.0701	**2.29** 0.0902	**4.06** 0.1598	**5.33** 0.2098	**0.089** 0.0035
250 9.8425	**280** 11.0236	**0.15** 0.0059	**0.22** 0.0087	**0.3** 0.0118	**0.39** 0.0154	**0.49** 0.0193	**0.62** 0.0244	**0.114** 0.0045	**0.165** 0.0065	**1.78** 0.0701	**2.54** 0.1000	**4.06** 0.1598	**5.84** 0.2299	**0.102** 0.004
280 11.0236	**315** 12.4016	**0.17** 0.0067	**0.24** 0.0094	**0.33** 0.013	**0.43** 0.0169	**0.54** 0.0213	**0.68** 0.0268	**0.127** 0.005	**0.178** 0.007	**1.90** 0.0748	**2.67** 0.1051	**4.45** 0.1752	**6.22** 0.2449	**0.102** 0.004
315 12.4016	**355** 13.9764	**0.19** 0.0075	**0.27** 0.0106	**0.36** 0.0142	**0.47** 0.0185	**0.59** 0.0232	**0.74** 0.0291	**0.14** 0.0055	**0.19** 0.0075	**2.03** 0.0799	**2.79** 0.1098	**4.83** 0.1902	**6.60** 0.2598	**0.114** 0.0045
355 13.9764	**400** 15.7480	**0.21** 0.0083	**0.3** 0.0118	**0.4** 0.0157	**0.52** 0.0205	**0.65** 0.0256	**0.82** 0.0323	**0.152** 0.006	**0.203** 0.008	**2.29** 0.0902	**3.05** 0.1201	**5.33** 0.2098	**7.11** 0.2799	**0.127** 0.005
400 15.7480	**450** 17.7165	**0.23** 0.0091	**0.33** 0.013	**0.44** 0.0173	**0.57** 0.0224	**0.72** 0.0283	**0.91** 0.0358	**0.165** 0.0065	**0.216** 0.0085	**2.54** 0.1000	**3.3** 0.1299	**5.84** 0.2299	**7.62** 0.3000	**0.152** 0.006
450 17.7165	**500** 19.6850	**0.26** 0.0102	**0.37** 0.0146	**0.49** 0.0193	**0.63** 0.0248	**0.79** 0.0311	**1** 0.0394	**0.178** 0.007	**0.229** 0.009	**2.67** 0.1051	**3.43** 0.1350	**6.22** 0.2449	**8.00** 0.3150	**0.165** 0.0065
500 19.6850	**560** 22.0472	**0.29** 0.0114	**0.41** 0.0161	**0.54** 0.0213	**0.68** 0.0268	**0.87** 0.0343	**1.1** 0.0433	**0.203** 0.008	**0.254** 0.01	**3.05** 0.1201	**3.81** 0.1500	**7.11** 0.2799	**8.89** 0.3500	**0.178** 0.007
560 22.0472	**630** 24.8031	**0.32** 0.0126	**0.46** 0.0181	**0.6** 0.0236	**0.76** 0.0299	**0.98** 0.0386	**1.23** 0.0484	**0.229** 0.009	**0.279** 0.011	**3.43** 0.1350	**4.19** 0.1650	**8.00** 0.3150	**9.78** 0.3850	**0.203** 0.008
630 24.8031	**710** 27.9528	**0.35** 0.0138	**0.51** 0.0201	**0.67** 0.0264	**0.85** 0.0335	**1.09** 0.0429	**1.36** 0.0535	**0.254** 0.01	**0.305** 0.012	**3.81** 0.1500	**4.57** 0.1799	**8.89** 0.3500	**10.67** 0.4201	**0.203** 0.008
710 27.9528	**800** 31.4961	**0.39** 0.0154	**0.57** 0.0224	**0.75** 0.0295	**0.96** 0.0378	**1.22** 0.048	**1.5** 0.0591	**0.279** 0.011	**0.356** 0.014	**4.19** 0.1650	**5.33** 0.2098	**9.78** 0.3850	**12.45** 0.4902	**0.229** 0.009
800 31.4961	**900** 35.4331	**0.44** 0.0173	**0.64** 0.0252	**0.84** 0.0331	**1.07** 0.0421	**1.37** 0.0539	**1.69** 0.0665	**0.305** 0.012	**0.381** 0.015	**4.57** 0.1799	**5.72** 0.2252	**10.67** 0.4201	**13.33** 0.5248	**0.252** 0.01
900 35.4331	**1000** 39.3701	**0.49** 0.0193	**0.71** 0.028	**0.93** 0.0366	**1.19** 0.0469	**1.52** 0.0598	**1.86** 0.0732	**0.356** 0.014	**0.432** 0.017	**5.33** 0.2100	**6.48** 0.2551	**12.45** 0.4902	**15.11** 0.5949	**0.279** 0.011

[1]This displacement is valid for assembly of tapered bore bearings and is measured starting from a line-to-line fit of the bearing bore to the tapered shaft.

[2]1:12 Taper used for 222, 223, 230, 231, 232, 233, 239 series. 1:30 Taper used for 240, 241, 242 series. For sleeve mounting, multiply axial displacement values by 1.1 for 1:12 Taper or by 1.05 for 1:30 Taper. For questions on tapered shaft data, consult your Timken engineer.

NOTE: Axial displacement values apply to solid steel shafts or hollow shafts with bore diameter less than half the shaft diameter. For shaft materials other than steel, or for thin-walled shafts, please consult your Timken engineer.

NOTE: Tolerance and shaft diameters are shown in the table as variances from nominal bearing bore.

EXAMPLE #1 –
Calculating RIC Reduction Using a Spherical Roller Bearing with Tapered Bore

Given bearing number 22328K C3 (140 mm bore with C3 clearance) is to be mounted on a tapered shaft. Using a set of feeler gages, RIC is measured at (see fig. D-3):

RIC = 0.178 mm (0.007 in.)

Suggested reduction of RIC due to installation = 0.064 mm – 0.089 mm (0.0025 in. – 0.0035 in.), found in table D-5 on page D-10.

Calculate the clearance after mounting (see fig. D-4):

0.178 mm – 0.076 mm = 0.102 mm *or*

(0.007 in. – 0.003 in. = 0.004 in.)

For this example, the value of 0.076 mm (0.003 in.) was obtained by taking the mid-range value of the upper and lower limits found in the tables on pages D-9 and D-10.

Therefore, the locknut should be tightened until RIC reaches 0.102 mm (0.004 in.).

Fig. D-3. Measure RIC before installation.

Fig. D-4. During mounting, the RIC should be checked at the unloaded roller.

It also should be noted that the value obtained by reading the suggested RIC after installation directly from the table is 0.056 mm (0.0022 in.). This differs from the value calculated in the example. The value taken directly from the table is provided as a minimum value. It is not suggested to use a calculated value that falls below this minimum.

EXAMPLE #2 –
Calculating RIC Reduction Using a Spherical Roller Bearing with Cylindrical Bore

Observations:

- Bearing 22230EM, nominal 150 mm (5.0955 in.) bore and 270 mm (10.6299 in.) O.D., standard class, operating at 1200 RPM.
- Float bearing position so the stationary O.D. should be free to move in SAF housing, with the stabilizing ring removed.
- With shaft/inner ring rotation and the moderate loading 0.09C, the bore should be tight fit.

We can use the nominal fit charts on page D-15 (shaft fit) to help guide our ISO fit selection.

Shaft Fit at 150 mm Bore: ISO p6

From the shaft fit chart at 150 mm nominal bore at p6 (page D-20), the shaft tolerance is nominal +0.043 to +0.068 mm (+0.0017 to +0.0027 in.). Therefore we have the following bore range:

max. shaft = 150.068 mm (5.0955 in.)

min. shaft = 150.043 mm (5.0945 in.)

This yields a shaft fit:

max. fit = max. shaft - min. bore
= 150.068 - 149.075
= 0.093 mm (0.0037 in.) tight

min. fit = min. shaft - max. bore
= 150.043 - 150.000
= 0.043 mm (0.0017 in.) tight

For the primary selection of RIC, the major parameters are the bearing speed and the fits. For our example, we know that the shaft fit is 0.043 mm (0.0017 in.) tight to 0.093 mm (0.0037 in.) tight.

We know the housing fit is loose. We also know that the bearing speed is 1200 RPM or 60 percent of the speed rating.

As a general rule of thumb, we increase the clearance for operating speeds that exceed 70 percent of the speed rating, due to concerns over internal heat generation and thermal growth. In this case, we are at 60 percent of the speed rating, so normal clearance, ISO CO or the SAF standard C3, can be selected.

Observing the RIC chart on page D-9, we find for 150 mm nominal bore at CO, the RIC will be 0.110 mm to 0.170 mm (0.0043 in. to 0.0067 in.). We also note that the minimum recommended RIC (installed) is 0.056 mm (0.0022 in.).

Also from page D-9, we note that we get an approximate reduction of RIC that is 80 percent of interference fit on a solid housing. Since we have a loose housing fit, there will be no RIC reduction from that fit.

Shaft fit RIC reductions and clearance:

For a 150 mm nominal bore at C3, the RIC will be 0.115 to 0.165 mm (0.0045 to 0.0065 in.). Recalculating shaft fit RIC reduction and clearance:

max. clearance = max. RIC - min. fit reduction
= 0.165 - 0.034 = 0.131 mm (0.0052 in.)

min. clearance = min. RIC - max. fit reduction
= 0.115 - 0.074 = 0.041 mm (0.0016 in.)

Since the minimum mounted clearance is less than the minimum suggested RIC of 0.056 mm (0.0022 in.), the C3 RIC clearance limit needs to be reevaluated.

INSTALLATION

When using a tight fit inner ring, the method of assembly will depend on whether the bearing has a cylindrical or tapered bore.

CLEANLINESS

- Choose a clean environment, free from dust and moisture.
- The installer should make every effort to ensure cleanliness by use of protective screens and clean cloths.

PLAN THE WORK

- Know your plans in advance and have the necessary tools at hand. This reduces the amount of time for the job and decreases the chance for dirt to get into the bearing.

INSPECTION AND PREPARATION

- All component parts of the machine should be on hand and thoroughly cleaned before proceeding.
- Housings should be cleaned, including blowing out the oil holes.
- Do not use air hose on bearings.
- If blind holes are used, insert a magnetic rod to remove metal chips that might be lodged there during fabrication.
- Shaft shoulders and spacer rings contacting the bearing should be square with the shaft axis.
- The shaft fillet must be small enough to clear the radius of the bearing.
- On original installations, all component parts should be checked against the detail specification prints for dimensional accuracy. Shaft and housing should be carefully checked for size and form (roundness, etc.).

⚠ WARNING

Failure to observe the following warnings could create a risk of death or serious injury.

Proper maintenance and handling practices are critical. Always follow installation instructions and maintain proper lubrication.

⚠ CAUTION

Failure to follow these cautions could create a risk of injury.

Remove oil or rust inhibitor from parts before heating, to avoid fire and fumes.

SHAFT AND HOUSING FINISH

- Shaft surfaces on which the bearing will be mounted must be clean and free from nicks and burrs.
- For applications with stationary housing and rotating shaft, it is suggested that the bearing seat on the shaft be ground to 1.6 µm (65 µin.) Ra maximum.
- If it is impractical to use a ground finish, a machined finish of 3.2 µm (125 µin.) Ra is acceptable in many cases, but the amount of interference fit should be slightly increased.

INSTALLING CYLINDRICAL BORE BEARINGS

Heat expansion method

- Most applications require a tight interference fit on the shaft.
- Mounting is simplified by heating the bearing to expand it sufficiently to slide easily onto the shaft.
- Two methods of heating are commonly used:

1. Tank of heated oil.
   - Accomplished by heating the bearing in a tank of oil that has a high flash point (see fig. D-5).
   - The oil temperature should not be allowed to exceed 121° C (250° F). A temperature of 93° C (200° F) is sufficient for most applications.
   - The bearing should be heated for 20 or 30 minutes, or until it is expanded sufficiently to slide onto the shaft easily.
   - The oil bath is shown in fig. D-5. The bearing should not be in direct contact with the heat source.
   - The usual arrangement is to have a screen several inches from the bottom of the tank. Small support blocks separate the bearing from the screen.
   - It is important to keep the bearing away from any localized high-heat source that may raise its temperature excessively, resulting in ring hardness reduction.
   - Flame-type burners are commonly used. An automatic device for temperature control is desirable.
   - If safety regulations prevent the use of an open heated oil bath, a mixture of 15 percent soluble-oil water may be used. This mixture may be heated to a maximum of 93° C (200° F) without being flammable.

2. Induction heating.
   - The induction heating process can be used for mounting bearings.
   - Induction heating is rapid. Care must be taken to prevent bearing temperature from exceeding 93° C (200° F).
   - Trial runs with the unit and bearing are usually necessary to obtain proper timing.

- Thermal crayons melted at predetermined temperatures or thermal gun can be used to check the bearing temperature.
- While the bearing is hot, it should be positioned squarely against the shoulder.
- Lockwashers and locknuts or clamping plates are then installed to hold the bearing against the shoulder of the shaft.
- As the bearing cools, the locknut or clamping plate should be tightened.
- For more information see the Timken Spherical Roller Bearing Catalog (order no. 10446), found on www.timken.com.

NOTE

Never use steam or hot water when cleaning the bearings because these methods can create rust or corrosion.

Never expose any surface of a bearing to the flame of a torch.

Do not heat bearing beyond 149° C (300° F).

Arbor press method

- An alternate method of mounting, generally used only on smaller size bearings, is to press the bearing onto the shaft or into the housing. This can be done by using an arbor press and a mounting tube as shown in fig. D-6.
- The tube should be made from soft steel with an inside diameter slightly larger than the shaft.
- The O.D. of the tube should not exceed the shaft backing diameter given in the Timken Spherical Roller Bearing Catalog (order no. 10446), found on www.timken.com.
- The tube should be faced square at both ends. It should be thoroughly clean inside and out, and long enough to clear the end of the shaft after the bearing is mounted.
- If the outer ring is being pressed into the housing, the O.D. of the mounting tube should be slightly smaller than the housing bore. The I.D. should not be less than the suggested housing backing diameter in the table of dimensions available in the Timken Spherical Roller Bearing Catalog (order no. 10446), found on www.timken.com.
- Coat the shaft with a light machine oil to reduce the force needed for a press fit.
- Carefully place the bearing on the shaft, making sure it is square with the shaft axis.
- Apply steady pressure from the arbor ram to drive the bearing firmly against the shoulder.

NOTE

Never attempt a press fit on a shaft by applying pressure to the outer ring or a press fit in a housing by applying pressure to the inner ring.

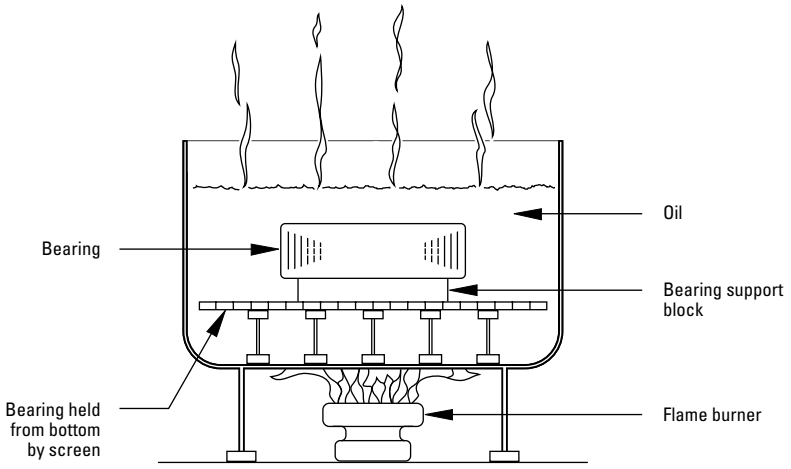

Fig. D-5. Heat expansion method.

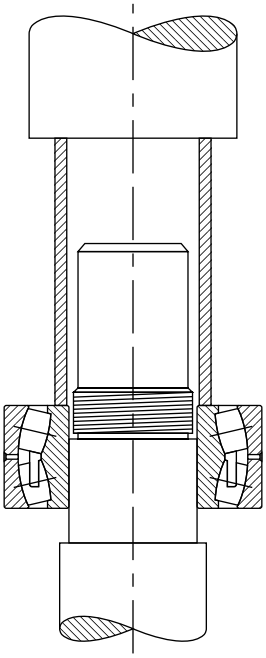

Fig. D-6. Arbor press method.

Mounting tapered bore spherical roller bearings

- Use a feeler gage with the thinnest blade of 0.038 mm (0.0015 in.).
- Place the bearing in an upright position with the inner and outer ring faces parallel.
- Place thumbs on the inner ring bore and oscillate the inner ring the distance of two or three roller spacings.
- Position the individual roller assemblies so that a roller is at the top of the inner ring on both sides of the bearing.
- With the roller in the correct position, insert a thin blade of the feeler gage between the roller and the outer ring, as shown in fig. D-7.
- Move the feeler gage carefully along the top roller between the roller and outer ring raceway. Repeat this procedure using thicker feeler gage blades until one is found that will not go through.
- The blade thickness that preceded the no-go blade is a measure of RIC before installation.
- Start the mounting procedure by lubricating the tapered shaft with a light coat of machine oil.
- Slide the bearing onto the shaft as far as it will go by hand.
- As the locknut is tightened, the interference fit builds up, resulting in expansion of the inner ring.
- Periodically measure to keep track of the reduction in RIC.
- Continue the procedure until the proper amount of reduction is obtained. Do not exceed suggested amount of reduction.
- As a final check, make sure the remaining RIC equals or exceeds the minimum mounted clearance shown in table D-5 on page D-10.
- During mounting, the RIC should be checked at the unloaded roller. If this is at the bottom, make sure that the roller is raised to seat firmly at the inboard position of the inner ring.
- When the suggested amount of RIC reduction has been accomplished, the bearing is properly fitted.
- Complete the procedure by peening the lockwasher tang into the locknut slot or securing the lockplate.

Fig. D-7. Measure RIC before installation.

SHAFT FITS FOR CYLINDRICAL BORE BEARINGS

This chart is a guideline for specifying shaft fits related to particular operating conditions. Please contact your Timken engineer for more information.

TABLE D-6. RADIAL SPHERICAL ROLLER BEARING SHAFT FITS

	Conditions	Examples	Shaft Dia.		Tolerance Symbol[1]	Remarks
			mm in.			
Stationary inner ring load	The inner ring not to be easily displaced on the shaft	Wheel on non-rotating shaft	All diameters		g6	
		Tension pulleys and rope sheaves			h6	
Rotating inner ring load or indeterminate load direction	Light and variable loads P ≤ 0.07C	Electrical apparatus, machine tools, pumps, ventilators, industrial trucks	over	incl.	k6	In very accurate applications, k5 and m5 are used instead of k6 and m6 respectively.
			18 0.7087	**100** 3.9370		
			100 3.9370	**200** 7.8740	m6	
	Normal and heavy loads P > 0.07C ≤ 0.25C	Applications in general, electrical motors, turbines, pumps, combustion engines, gear transmissions, woodworking machines	**18** 0.7087	**65** 2.5590	m5	
			65 2.5590	**100** 3.9370	m6	
			100 3.9370	**140** 5.5118	n6	
			140 5.5118	**280** 11.0236	p6	
			280 11.0236	**500** 19.6850	r6	
			500 19.6850	**and up**	r7	
	Very heavy loads and shock loads P > 0.25C	Journal boxes for locomotives and other heavy rail vehicles, traction motors	**18** 0.7087	**65** 2.5590	m6	Bearings with greater clearance than normal must be used.
			65 2.5590	**100** 3.9370	n6	
			100 3.9370	**140** 5.5118	p6	
			140 5.5118	**200** 7.8740	r6	
			200 7.8740	**500** 19.6850	r7	
BEARINGS WITH TAPERED BORE AND ADAPTER SLEEVE						
	All loads	Applications in general	All diameters			See tables for Reduction of RIC on pages D-9 and D-10.

[1]For solid steel shaft. See tables on pages D-16 through D-21 for tolerance value.
NOTE: Tolerance and shaft diameters are shown in the table as variances from nominal bearing bore.

These charts are guidelines for specifying shaft and housing fits related to particular operating conditions in table D-6 on page D-15.

FITTING PRACTICE TABLES

TABLE D-7. SPHERICAL ROLLER BEARINGS - SHAFT TOLERANCES (CLASSES g6, h5, h6, j5, j6, k5, k6, m5)

Bearing Bore			g6			h6			h5			j5		
Nominal (Max.)		Tolerance[1]	Shaft Dia.		Fit	Shaft Dia.		Fit	Shaft Dia.		Fit	Shaft Dia.		Fit
Over	Incl.		Max.	Min.		Max.	Min.		Max.	Min.		Max.	Min.	
mm in.	**mm** in.	**mm** in.	**mm** in.	**mm** in.	**mm** in.	**mm** in.	**mm** in.	**mm** in.	**mm** in.	**mm** in.	**mm** in.	**mm** in.	**mm** in.	**mm** in.
30.000	**50.000**	**-0.014**	**-0.009**	**-0.025**	**0.025L**	**0.000**	**-0.016**	**0.016L**	–	–	–	**+0.006**	**-0.005**	**0.005L**
					0.003T			**0.012T**						**0.018T**
1.1811	1.9685	-0.0006	-0.0004	-0.0010	0.0010L	0.0000	-0.0006	0.0006L				+0.0002	-0.0002	0.0002L
					0.0001T			0.0005T						0.0007T
50.000	**80.000**	**-0.015**	**-0.010**	**-0.029**	**0.029L**	**0.000**	**-0.019**	**0.019L**	–	–	–	**+0.006**	**-0.007**	**0.007L**
					0.005T			**0.015T**						**0.021T**
1.9685	3.1496	-0.0006	-0.0004	-0.0011	0.0011L	0.0000	-0.0007	0.0007L				+0.0002	-0.0003	0.0003L
					0.0002T			0.0006T						0.0008T
80.000	**120.000**	**-0.020**	**-0.012**	**-0.034**	**0.034L**	**0.000**	**-0.022**	**0.022L**	–	–	–	**+0.006**	**-0.009**	**0.009L**
					0.008T			**0.020T**						**0.026T**
3.1496	4.7244	-0.0008	-0.0005	-0.0013	0.0013L	0.0000	-0.0009	0.0009L				+0.0002	-0.0004	0.0004L
					0.0003T			0.0008T						0.0010T
120.000	**180.000**	**-0.025**	**-0.014**	**-0.039**	**0.039L**	**0.000**	**-0.025**	**0.025L**	–	–	–	**+0.007**	**-0.011**	**0.011L**
					0.011T			**0.025T**						**0.032T**
4.7244	7.0866	-0.0010	-0.0006	-0.0015	0.0015L	0.0000	-0.0010	0.0010L				+0.0003	-0.0004	0.0004L
					0.0004T			0.0010T						0.0013T
180.000	**200.000**	**-0.030**	**-0.015**	**-0.044**	**0.044T**	**0.000**	**-0.029**	**0.029L**	–	–	–	**+0.007**	**-0.013**	**0.013L**
					0.015T			**0.030T**						**0.037T**
7.0866	7.8740	-0.0012	-0.0006	-0.0017	0.0017L	0.0000	-0.0011	0.0011L				+0.0003	-0.0005	0.0005L
					0.0006T			0.0012T						0.0015T
200.000	**225.000**	**-0.030**	**-0.015**	**-0.044**	**0.044T**	**0.000**	**-0.029**	**0.029L**	–	–	–	**+0.007**	**-0.013**	**0.013L**
					0.015T			**0.030T**						**0.037T**
7.8740	8.8583	-0.0012	-0.0006	-0.0017	0.0017L	0.0000	-0.0011	0.0011L				+0.0003	-0.0005	0.0005L
					0.0006T			0.0012T						0.0015T
225.000	**250.000**	**-0.030**	**-0.015**	**-0.044**	**0.044T**	**0.000**	**-0.029**	**0.029L**	–	–	–	**+0.007**	**-0.013**	**0.013L**
					0.015T			**0.030T**						**0.037T**
8.8583	9.8425	-0.0012	-0.0006	-0.0017	0.0017L	0.0000	-0.0011	0.0011L				+0.0003	-0.0005	0.0005L
					0.0006T			0.0012T						0.0015T
250.000	**280.000**	**-0.035**	**-0.017**	**-0.049**	**0.049L**	**0.000**	**-0.032**	**0.032L**	–	–	–	**+0.007**	**-0.016**	**0.016L**
					0.018T			**0.035T**						**0.042T**
9.8425	11.0236	-0.0014	-0.0007	-0.0019	0.0019L	0.0000	-0.0013	0.0013L				+0.0003	-0.0006	0.0006L
					0.0007T			0.0014T						0.0017T
280.000	**315.000**	**-0.035**	**-0.017**	**-0.049**	**0.049L**	**0.000**	**-0.032**	**0.032L**	–	–	–	**+0.007**	**-0.016**	**0.016L**
					0.018T			**0.035T**						**0.042T**
11.0236	12.4016	-0.0014	-0.0007	-0.0019	0.0019L	0.0000	-0.0013	0.0013L				+0.0003	-0.0006	0.0006L
					0.0007T			0.0014T						0.0017T
315.000	**355.000**	**-0.040**	**-0.018**	**-0.054**	**0.054L**	**0.000**	**-0.036**	**0.036L**	–	–	–	**+0.007**	**-0.018**	**0.018L**
					0.022T			**0.040T**						**0.047T**
12.4016	13.9764	-0.0016	-0.0007	-0.0021	0.0021L	0.0000	-0.0014	0.0014L				+0.0003	-0.0007	0.0007L
					0.0009T			0.0016T						0.0019T

[1]Tolerance range is from +0 to value listed.
NOTE: Tolerance and shaft diameters are shown in the table as variances from nominal bearing bore.

These charts are guidelines for specifying shaft and housing fits related to particular operating conditions in table D-6 on page D-15.

j6			k5			k6			m5		
Shaft Dia. Max.	Shaft Dia. Min.	Fit	Shaft Dia. Max.	Shaft Dia. Min.	Fit	Shaft Dia. Max.	Shaft Dia. Min.	Fit	Shaft Dia. Max.	Shaft Dia. Min.	Fit
mm in.	mm in.	mm in.	mm in.	mm in.	mm in.	mm in.	mm in.	mm in.	mm in.	mm in.	mm in.
+0.011 +0.0004	**-0.005** -0.0002	**0.005L** **0.023T** 0.0002L 0.00085T	**+0.013** +0.0005	**+0.002** +0.0001	**0.002T** **0.025T** 0.0001T 0.0010T	**+0.018** +0.0007	**+0.002** +0.0001	**0.002T** **0.030T** 0.0001T 0.0012T	**+0.020** +0.0008	**+0.009** +0.0004	**0.009T** **0.032T** 0.0004T 0.00125T
+0.012 +0.0005	**-0.007** -0.0003	**0.007L** **0.027T** 0.0003L 0.0011T	**+0.015** +0.0006	**+0.002** +0.0001	**0.002T** **0.030T** 0.0001T 0.0012T	**+0.021** +0.0008	**+0.002** +0.0001	**0.002T** **0.036T** 0.0001T 0.0014T	**+0.024** +0.0009	**+0.011** +0.0004	**0.011T** **0.039T** 0.0004T 0.0015T
+0.013 +0.0005	**-0.009** -0.0004	**0.009L** **0.033T** 0.0004L 0.0013T	**+0.018** +0.0007	**+0.003** +0.0001	**0.003T** **0.038T** 0.0001T 0.0015T	**+0.025** +0.0010	**+0.003** +0.0001	**0.003T** **0.045T** 0.0001T 0.0018T	**+0.028** +0.0011	**+0.013** +0.0005	**0.013T** **0.048T** 0.0005T 0.0019T
+0.014 +0.0006	**-0.011** -0.0004	**0.011L** **0.039T** 0.0004L 0.0016T	**+0.021** +0.0008	**+0.003** +0.0001	**0.003T** **0.046T** 0.0001T 0.0018T	**+0.028** +0.0011	**+0.003** +0.0001	**0.003T** **0.053T** 0.0001T 0.0021T	**+0.033** +0.0013	**+0.015** +0.0006	**0.015T** **0.058T** 0.0006T 0.0023T
+0.016 +0.0006	**-0.013** -0.0005	**0.013L** **0.046T** 0.0005L 0.0018T	**+0.024** +0.0009	**+0.004** +0.0002	**0.004T** **0.054T** 0.0002T 0.0021T	–	–	–	**+0.037** +0.0015	**+0.017** +0.0007	**0.017T** **0.067T** 0.0007T 0.0027T
+0.016 +0.0006	**-0.013** -0.0005	**0.013L** **0.046T** 0.0005L 0.0018T	**+0.024** +0.0009	**+0.004** +0.0002	**0.004T** **0.054T** 0.0002T 0.0021T	–	–	–	**+0.037** +0.0015	**+0.017** +0.0007	**0.017T** **0.067T** 0.0007T 0.0027T
+0.016 +0.0006	**-0.013** -0.0005	**0.013L** **0.046T** 0.0005L 0.0018T	**+0.024** +0.0009	**+0.004** +0.0002	**0.004T** **0.054T** 0.0002T 0.0021T	–	–	–	**+0.037** +0.0015	**+0.017** +0.0007	**0.017T** **0.067T** 0.0007T 0.0027T
+0.016 +0.0006	**-0.016** -0.0006	**0.016L** **0.051T** 0.0006L 0.0020T	**+0.027** +0.0011	**+0.004** +0.0002	**0.004T** **0.062T** 0.0002T 0.0025T	–	–	–	**+0.043** +0.0017	**+0.020** +0.0008	**0.020T** **0.078T** 0.0008T 0.0031T
+0.016 +0.0006	**-0.016** -0.0006	**0.016L** **0.051T** 0.0006L 0.0020T	**+0.027** +0.0011	**+0.004** +0.0002	**0.004T** **0.062T** 0.0002T 0.0025T	–	–	–	**+0.043** +0.0017	**+0.020** +0.0008	**0.020T** **0.078T** 0.0008T 0.0031T
+0.018 +0.0007	**-0.018** -0.0007	**0.018L** **0.058T** 0.0007L 0.0023T	**+0.029** +0.0011	**+0.046** +0.0002	**0.004T** **0.069T** 0.0002T 0.0027T	–	–	–	**+0.046** +0.0018	**+0.021** +0.0008	**0.021T** **0.086T** 0.0008T 0.0034T

[1] Tolerance range is from +0 to value listed.

NOTE: Tolerance and shaft diameters are shown in the table as variances from nominal bearing bore.

Continued on next page.

These charts are guidelines for specifying shaft and housing fits related to particular operating conditions in table D-6 on page D-15.

TABLE D-7. SPHERICAL ROLLER BEARINGS - SHAFT TOLERANCES (CLASSES g6, h5, h6, j5, j6, k5, k6, m5) *– continued*

Bearing Bore			g6			h6			h5			j5		
Nominal (Max.)		Tolerance[1]	Shaft Dia.		Fit	Shaft Dia.		Fit	Shaft Dia.		Fit	Shaft Dia.		Fit
Over	Incl.		Max.	Min.		Max.	Min.		Max.	Min.		Max.	Min.	
mm in.	**mm** in.	**mm** in.	**mm** in.	**mm** in.	**mm** in.	**mm** in.	**mm** in.	**mm** in.	**mm** in.	**mm** in.	**mm** in.	**mm** in.	**mm** in.	**mm** in.
					0.054L			**0.036L**						**0.018L**
355.000	**400.000**	**-0.040**	**-0.018**	**-0.054**	**0.022T**	**0.000**	**-0.036**	**0.040T**	–	–	–	**+0.007**	**-0.018**	**0.047T**
13.9764	15.7480	-0.0016	-0.0007	-0.0021	0.0021L	0.0000	-0.0014	0.0014L				+0.0003	-0.0007	0.0007L
					0.0009T			0.0016T						0.0019T
					0.060L			**0.040L**						**0.020L**
400.000	**450.000**	**-0.045**	**-0.020**	**-0.060**	**0.025T**	**0.000**	**-0.040**	**0.045T**	–	–	–	**+0.007**	**-0.020**	**0.052T**
15.7480	17.7165	-0.0018	-0.0008	-0.0024	0.0024L	0.0000	-0.0016	0.0016L				+0.0003	-0.0008	0.0008L
					0.0010T			0.0018T						0.0021T
					0.060L			**0.040L**						**0.020L**
450.000	**500.000**	**-0.045**	**-0.020**	**-0.060**	**0.025T**	**0.000**	**-0.040**	**0.045T**	–	–	–	**+0.007**	**-0.020**	**0.052T**
17.7165	19.6850	-0.0018	-0.0008	-0.0024	0.0024L	0.0000	-0.0016	0.0016L				+0.0003	-0.0008	0.0008L
					0.0010T			0.0018T						0.0020T

[1]Tolerance range is from +0 to value listed.
NOTE: Tolerance and shaft diameters are shown in the table as variances from nominal bearing bore.

These charts are guidelines for specifying shaft and housing fits related to particular operating conditions in table D-6 on page D-15.

j6			k5			k6			m5		
Shaft Dia.		Fit	Shaft Dia.		Fit	Shaft Dia.		Fit	Shaft Dia.		Fit
Max.	Min.		Max.	Min.		Max.	Min.		Max.	Min.	
mm in.	**mm** in.	**mm** in.	**mm** in.	**mm** in.	**mm** in.	**mm** in.	**mm** in.	**mm** in.	**mm** in.	**mm** in.	**mm** in.
		0.018L			**0.004T**						**0.021T**
+0.018	**-0.018**	**0.058T**	**+0.029**	**+0.004**	**0.069T**	–	–	–	**+0.046**	**+0.021**	**0.086T**
+0.0007	-0.0007	0.0007L	+0.0011	+0.0002	0.0002T				+0.0018	+0.0008	0.0008T
		0.0023T			0.0027T						0.0034T
		0.020L			**0.005T**						**0.023T**
+0.020	**-0.020**	**0.065T**	**+0.032**	**+0.005**	**0.077T**	–	–	–	**+0.050**	**+0.023**	**0.095T**
+0.0008	-0.0008	0.0008L	+0.0013	+0.0002	0.0002T				+0.0020	+0.0009	0.0009T
		0.0026T			0.0031T						0.0037T
		0.020L			**0.005T**						**0.023T**
+0.020	**-0.020**	**0.065T**	**+0.032**	**+0.005**	**0.077T**	–	–	–	**+0.050**	**+0.023**	**0.095T**
+0.0008	-0.0008	0.0008L	+0.0013	+0.0002	0.0002T				+0.0020	+0.0009	0.0009T
		0.0026T			0.0031T						0.0037T

(1)Tolerance range is from +0 to value listed.
NOTE: Tolerance and shaft diameters are shown in the table as variances from nominal bearing bore.

These charts are guidelines for specifying shaft and housing fits related to particular operating conditions in table D-6 on page D-15.

TABLE D-8. SPHERICAL ROLLER BEARINGS - SHAFT TOLERANCES (CLASSES m6, n6, p6, r6, r7)

Bearing Bore			m6			n6			p6			r6			r7		
Nominal (Max.)		Tolerance[1]	Shaft Dia.		Fit	Shaft Dia.		Fit	Shaft Dia.		Fit	Shaft Dia.		Fit	Shaft Dia.		Fit
Over	Incl.		Max.	Min.		Max.	Min.		Max.	Min.		Max.	Min.		Max.	Min.	
mm in.	**mm** in.	**mm** in.	**mm** in.	**mm** in.	**mm** in.	**mm** in.	**mm** in.	**mm** in.	**mm** in.	**mm** in.	**mm** in.	**mm** in.	**mm** in.	**mm** in.	**mm** in.	**mm** in.	**mm** in.
					0.009T												
30.000	**50.000**	**-0.014**	**+0.025**	**+0.009**	**0.037T**	–	–	–	–	–	–	–	–	–	–	–	–
1.1811	1.9685	-0.0006	+0.0010	+0.0004	0.0004T												
					0.0145T												
					0.011T			**0.020T**									
50.000	**80.000**	**-0.015**	**+0.030**	**+0.011**	**0.045T**	**+0.039**	**+0.020**	**0.054T**	–	–	–	–	–	–	–	–	–
1.9685	3.1496	-0.0006	+0.0012	+0.0004	0.0004T	+0.0015	+0.0008	0.0008T									
					0.0018T			0.0021T									
					0.013T			**0.023T**			**0.037T**						
80.000	**120.000**	**-0.020**	**+0.035**	**+0.013**	**0.055T**	**+0.045**	**+0.023**	**0.065T**	**+0.059**	**+0.037**	**0.079T**	–	–	–	–	–	–
3.1496	4.7244	-0.0008	+0.0014	+0.0005	0.0005T	+0.0018	+0.0009	0.0009T	+0.0023	+0.0015	0.0015T						
					0.0022T			0.0026T			0.0031T						
					0.015T			**0.027T**			**0.043T**			**0.065T**			
120.000	**180.000**	**-0.025**	**+0.040**	**+0.015**	**0.065T**	**+0.052**	**+0.027**	**0.077T**	**+0.068**	**+0.043**	**0.093T**	**+0.090**	**+0.065**	**0.115T**	–	–	–
4.7244	7.0866	-0.0010	+0.0016	+0.0006	0.0006T	+0.0020	+0.0011	0.0011T	+0.0027	+0.0017	0.0017T	+0.0035	+0.0026	0.0026T			
					0.0026T			0.0030T			0.0037T			0.0045T			
					0.017T			**0.031L**			**0.050T**			**0.077T**			
180.000	**200.000**	**-0.030**	**+0.046**	**+0.017**	**0.076T**	**+0.060**	**+0.031**	**0.090T**	**+0.079**	**+0.050**	**0.109T**	**+0.106**	**+0.077**	**0.136T**	–	–	–
7.0866	7.8740	-0.0012	+0.0018	+0.0007	0.0007T	+0.0024	+0.0012	0.0012L	+0.0031	+0.0020	0.0020T	+0.0042	+0.0030	0.0030T			
					0.0030T			0.0036T			0.0043T			0.0054T			
					0.017T			**0.031L**			**0.050T**			**0.080T**			**0.080T**
200.000	**225.000**	**-0.030**	**+0.046**	**+0.017**	**0.076T**	**+0.060**	**+0.031**	**0.090T**	**+0.079**	**+0.050**	**0.109T**	**+0.109**	**+0.080**	**0.139T**	**+0.126**	**+0.080**	**0.156T**
7.8740	8.8583	-0.0012	+0.0018	+0.0007	0.0007T	+0.0024	+0.0012	0.0012L	+0.0031	+0.0020	0.0020T	+0.0043	+0.0031	0.0031T	+0.0050	+0.0031	0.0031T
					0.0030T			0.0036T			0.0043T			0.0055T			0.0062T
					0.017T			**0.031L**			**0.050T**			**0.084T**			**0.084T**
225.000	**250.000**	**-0.030**	**+0.046**	**+0.017**	**0.076T**	**+0.060**	**+0.031**	**0.090T**	**+0.079**	**+0.050**	**0.109T**	**+0.113**	**+0.084**	**0.143T**	**+0.130**	**+0.084**	**0.160T**
8.8583	9.8425	-0.0012	+0.0018	+0.0007	0.0007T	+0.0024	+0.0012	0.0012L	+0.0031	+0.0020	0.0020T	+0.0044	+0.0033	0.0033T	+0.0051	+0.0033	0.0033T
					0.0030T			0.0036T			0.0043T			0.0056T			0.0063T
					0.020T			**0.034T**			**0.056T**			**0.094T**			**0.094T**
250.000	**280.000**	**-0.035**	**+0.052**	**+0.020**	**0.087T**	**+0.066**	**+0.034**	**0.101T**	**+0.088**	**+0.056**	**0.123T**	**+0.126**	**+0.094**	**0.161T**	**+0.146**	**+0.094**	**0.181T**
9.8425	11.0236	-0.0014	+0.0020	+0.0008	0.0008T	+0.0026	+0.0013	0.0013T	+0.0035	+0.0022	0.0022T	+0.0050	+0.0037	0.0037T	+0.0057	+0.0037	0.0037T
					0.0034T			0.0040T			0.0049T			0.0064T			0.0071T
					0.020T			**0.034T**			**0.056T**			**0.098T**			**0.098T**
280.000	**315.000**	**-0.035**	**+0.052**	**+0.020**	**0.087T**	**+0.066**	**+0.034**	**0.101T**	**+0.088**	**+0.056**	**0.123T**	**+0.130**	**+0.098**	**0.165T**	**+0.150**	**+0.098**	**0.185T**
11.0236	12.4016	-0.0014	+0.0020	+0.0008	0.0008T	+0.0026	+0.0013	0.0013T	+0.0035	+0.0022	0.0022T	+0.0051	+0.0039	0.0039T	+0.0059	+0.0039	0.0039T
					0.0034T			0.0040T			0.0049T			0.0065T			0.0073T
					0.021T			**0.037T**			**0.062T**			**0.108T**			**0.108T**
315.000	**355.000**	**-0.040**	**+0.057**	**+0.021**	**0.097T**	**+0.073**	**+0.037**	**0.113T**	**+0.098**	**+0.062**	**0.138T**	**+0.144**	**+0.108**	**0.184T**	**+0.165**	**+0.108**	**0.205T**
12.4016	13.9764	-0.0016	+0.0022	+0.0008	0.0008T	+0.0029	+0.0015	0.0015T	+0.0039	+0.0024	0.0024T	+0.0057	+0.0043	0.0043T	+0.0065	+0.0043	0.0043T
					0.0038T			0.0045T			0.0055T			0.0073T			0.0081T

[1]Tolerance range is from +0 to value listed.

NOTE: Tolerance and shaft diameters are shown in the table as variances from nominal bearing bore.

Continued on next page.

These charts are guidelines for specifying shaft and housing fits related to particular operating conditions in table D-6 on page D-15.

Continued from previous page.

Bearing Bore			m6			n6			p6			r6			r7		
Nominal (Max.)		Tolerance[1]	Shaft Dia.		Fit	Shaft Dia.		Fit	Shaft Dia.		Fit	Shaft Dia.		Fit	Shaft Dia.		Fit
Over	Incl.		Max.	Min.		Max.	Min.		Max.	Min.		Max.	Min.		Max.	Min.	
mm in.	**mm** in.	**mm** in.	**mm** in.	**mm** in.	**mm** in.	**mm** in.	**mm** in.	**mm** in.	**mm** in.	**mm** in.	**mm** in.	**mm** in.	**mm** in.	**mm** in.	**mm** in.	**mm** in.	**mm** in.
								0.037T			**0.062T**			**0.114T**			**0.114T**
355.000	**400.000**	**-0.040**	–	–	–	**+0.073**	**+0.037**	**0.113T**	**+0.098**	**+0.062**	**0.138T**	**+0.150**	**+0.114**	**0.190T**	**+0.171**	**+0.114**	**0.211T**
13.9764	15.7480	-0.0016				+0.0029	+0.0015	0.0015T	+0.0039	+0.0024	0.0024T	+0.0059	+0.0045	0.0045T	+0.0067	+0.0045	0.0045T
								0.0045T			0.0055T			0.0075T			0.0083T
								0.040T			**0.068T**			**0.126T**			**0.126T**
400.000	**450.000**	**-0.045**	–	–	–	**+0.080**	**+0.040**	**0.125T**	**+0.108**	**+0.068**	**0.153T**	**+0.166**	**+0.126**	**0.211T**	**+0.189**	**+0.126**	**0.234T**
15.7480	17.7165	-0.0018				+0.0031	+0.0016	0.0016T	+0.0043	+0.0027	0.0027T	+0.0065	+0.0050	0.0050T	+0.0074	+0.0050	0.0050T
								0.0049T			0.0061T			0.0083T			0.0092T
								0.040T			**0.068T**			**0.132T**			**0.132T**
450.000	**500.000**	**-0.045**	–	–	–	**+0.080**	**+0.040**	**0.125T**	**+0.108**	**+0.068**	**0.153T**	**+0.172**	**+0.132**	**0.217T**	**+0.195**	**+0.132**	**0.240T**
17.7165	19.6850	-0.0018				+0.0031	+0.0016	0.0016T	+0.0043	+0.0027	0.0027T	+0.0068	+0.0052	0.0052T	+0.0077	+0.0052	0.0052T
								0.0049T			0.0061T			0.0086T			0.0095T

[1]Tolerance range is from +0 to value listed.

NOTE: Tolerance and shaft diameters are shown in the table as variances from nominal bearing bore.

SAF LUBRICATION

To help maintain a bearing's antifriction characteristics, lubrication is needed to:

- Minimize rolling resistance caused by deformation of the rolling elements and raceway under load by separating the mating surfaces.
- Minimize sliding friction occurring between rolling elements, raceways and cage.
- Transfer heat (with oil lubrication).
- Protect from corrosion and, with grease lubrication, from contaminant ingress.

SAF LUBRICATION

The wide range of bearing types and operating conditions precludes any simple, all-inclusive statement or guideline allowing the selection of the proper lubricant. At the design level, the first consideration is whether oil or grease is best for the particular operation. The advantages of oil and grease are outlined in the table below. When heat must be carried away from the bearing, oil must be used. It is almost always preferred for very high-speed applications. Timken SAF housings are designed to allow lubrication via grease, oil bath, or oil circulation.

TABLE D-10. ADVANTAGES OF OIL AND GREASE

Oil	Grease
Carries heat away from the bearings	Simplifies seal design and acts as a sealant
Carries away moisture and particulate matter	Permits prelubrication of sealed or shielded bearings
Easily controlled lubrication	Generally requires less frequent lubrication

European REACH compliance

Timken-branded lubricants, greases and similar products sold in stand-alone containers or delivery systems are subject to the European REACH (**R**egistration, **E**valuation, **A**uthorization and Restriction of **CH**emicals) directive. For import into the European Union, Timken can sell and provide only those lubricants and greases that are registered with ECHA (**E**uropean **CH**emical **A**gency). For further information, please contact your Timken engineer.

OIL LUBRICATION

Oils used for bearing lubrication should be high-quality mineral oils or synthetic oils with similar properties. Selection of the proper type of oil depends on bearing speed, load, operating temperature and lubrication method. Some features and advantages of oil lubrication, in addition to the above are:

- Oil is a better lubricant for high speeds or high temperatures. It can be cooled to help reduce bearing temperature.
- It is easier to handle and control the amount of lubricant reaching the bearing. It is harder to retain in the bearing. Lubricant losses may be higher than with grease.
- Oil can be introduced to the bearing in many ways, such as drip-feed, wick-feed, pressurized circulating systems, oil bath or air-oil mist. Each is suited for certain types of applications.
- Oil is easier to keep clean for recirculating systems.

Oil may be introduced to the bearing housing in many ways. The most common systems are:

- **Oil bath.** The SAF housing is designed to provide a sump through which the rolling elements of the bearing will pass. Generally, the oil level should be no higher than the center point of the lowest rolling element. If speed is high, lower oil levels should be used to reduce churning. Gages or controlled elevation drains are used to achieve and maintain the proper oil level.
- **Circulating system.** This system has the advantages of:
  - An adequate supply of oil for both cooling and lubrication.
  - Metered control of the quantity of oil delivered to each bearing.
  - Removal of contaminants and moisture from the bearing by flushing action.
  - Suitability for multiple bearing installations.
  - Large reservoir, which reduces deterioration. Increased lubricant life provides economical efficiency.
  - Incorporation of oil-filtering devices.
  - Positive control to deliver the lubricant where needed.
  - A typical circulating oil system consists of an oil reservoir, pump, piping and filter. A heat exchange may be required.
- **Oil-mist lubrication.** Oil-mist lubrication systems are used in high-speed, continuous-operation applications. This system permits close control of the amount of lubricant reaching the bearings. The oil may be metered, atomized by compressed air and mixed with air, or it may be picked up from a reservoir using a venturi effect. In either case, the air is filtered and supplied under sufficient pressure to assure adequate lubrication of the bearings. Control of this type of lubrication system is accomplished by monitoring the operating temperatures of the bearings being lubricated. The continuous passage of the pressurized air and oil through the labyrinth seals used in the system prevents the entrance of contaminants from the atmosphere to the system.

  The successful operation of this type of system is based upon the following factors:
  - Proper location of the lubricant entry ports in relation to the bearings being lubricated.
  - Avoidance of excessive pressure drops across void spaces within the system.
  - Proper air pressure and oil quantity ratio to suit the particular application.
  - Adequate exhaust of the air-oil mist after lubrication has been accomplished.

  To ensure wetting of the bearings, and to prevent possible damage to the rolling elements and rings, it is imperative that the oil-mist system be turned on for several minutes before the equipment is started. The importance of wetting the bearing before starting cannot be overstated, and it also has particular significance for equipment that has been idled for extended periods of time.

Lubricating oils are commercially available in many forms for automotive, industrial, aircraft and other uses. Oils are classified as either petroleum types (refined from crude oil) or synthetic types (produced by chemical synthesis).

PETROLEUM OILS

Petroleum oils are made from a petroleum hydrocarbon derived from crude oil, with additives to improve certain properties. Petroleum oils are used for nearly all oil-lubricated applications of bearings.

SYNTHETIC OILS

Synthetic oils cover a broad range of categories and include polyalphaolefins, silicones, polyglycols and various esters. In general, synthetic oils are less prone to oxidation and can operate at extreme hot or cold temperatures. Physical properties, such as pressure-viscosity coefficients, tend to vary between oil types; use caution when making oil selections.

The polyalphaolefins (PAO) have a hydrocarbon chemistry that parallels petroleum oil both in chemical structures and pressure-viscosity coefficients. Therefore, PAO oil is mostly used in the oil-lubricated applications of bearings when severe temperature environments (hot and cold) are encountered or when extended lubricant life is required.

The silicone, ester and polyglycol oils have an oxygen-based chemistry that is structurally quite different from petroleum oils and PAO oils. This difference has a profound effect on its physical properties where pressure-viscosity coefficients can be lower compared to mineral and PAO oils. This means that these types of synthetic oils may actually generate a smaller elastohydrodynamic (EHD) film thickness than a mineral or PAO oil of equal viscosity at operating temperature. Reductions in bearing fatigue life and increases in bearing wear could result from this reduction of lubricant film thickness.

WARNING

Failure to observe the following warnings could create a risk of death or serious injury.

Proper maintenance and handling practices are critical. Always follow installation instructions and maintain proper lubrication.

VISCOSITY

The selection of oil viscosity for any bearing application requires consideration of several factors: load, speed, bearing setting, type of oil and environmental factors. Since oil viscosity varies inversely with temperature, a viscosity value must always be stated with the temperature at which it was determined. High-viscosity oil is used for low-speed or high-ambient-temperature applications. Low-viscosity oil is used for high-speed or low-ambient-temperature applications.

There are several classifications of oils based on viscosity grades. The most familiar are the Society of Automotive Engineers (SAE) classifications for automotive engine and gear oils. The American Society for Testing and Materials (ASTM) and the International Organization for Standardization (ISO) have adopted standard viscosity grades for industrial fluids. Fig. D-8 shows the viscosity comparisons of ISO/ASTM with SAE classification systems at 40° C (104° F).

VISCOSITY CLASSIFICATION COMPARISON

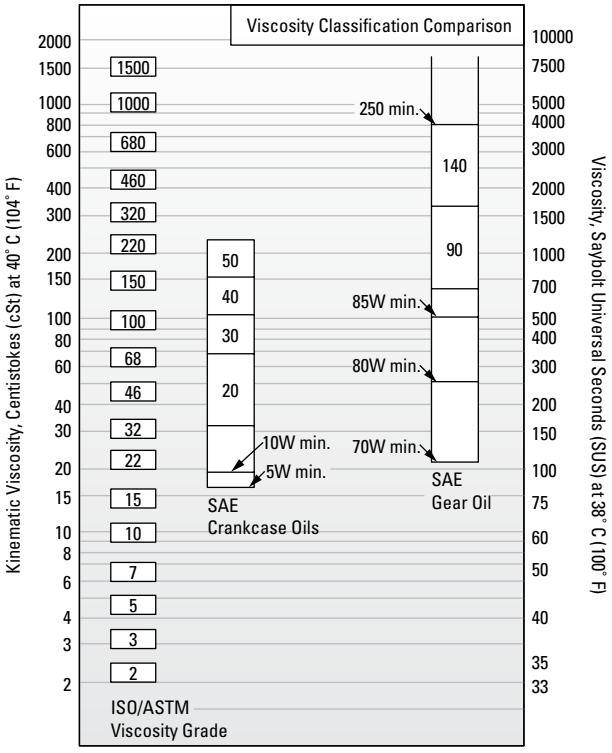

Fig. D-8. Comparison between ISO/ASTM grades (ISO 3448/ASTM D2442) and SAE grades (SAE J 300-80 for crankcase oils, SAE J 306-81 for axle and manual transmission oils).

The ASTM/ISO viscosity grade system for industrial oils is depicted in fig. D-9 below.

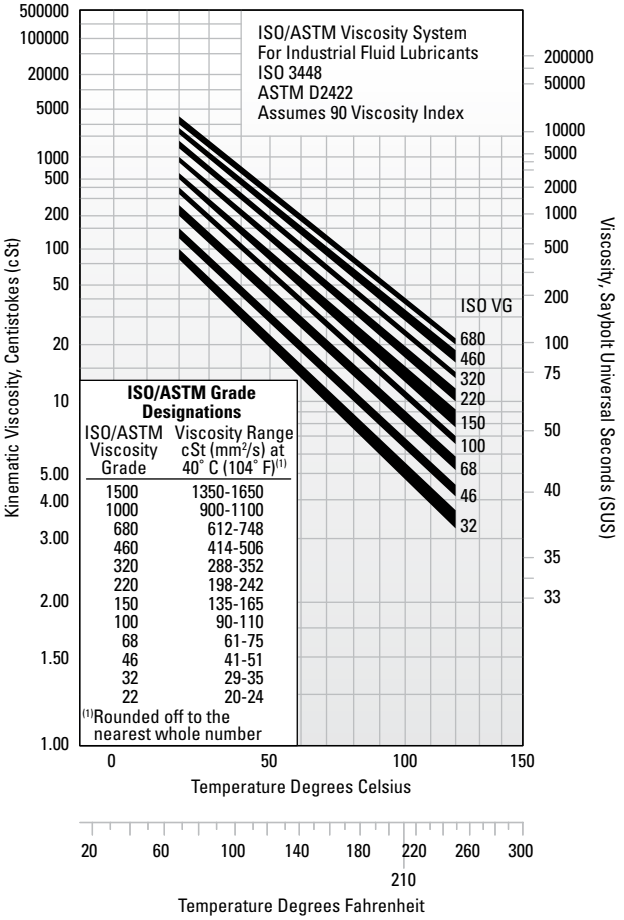

Fig. D-9. Viscosity grade system for industrial oils.

TYPICAL BEARING LUBRICATION OILS

In this section, the properties and characteristics of lubricants for typical roller bearing applications are listed. These general characteristics are derived from successful performance in applications across all industries.

General-purpose rust and oxidation inhibited oil

General-purpose rust and oxidation (R&O) inhibited oils are the most common type of industrial lubricant (see table D-11). They are used to lubricate Timken® bearings in all types of industrial applications where conditions requiring special considerations do not exist.

TABLE D-11. SUGGESTED GENERAL-PURPOSE R&O INHIBITED OIL PROPERTIES

	Properties
Base stock	Solvent-refined, high viscosity-index petroleum oil
Additives	Corrosion and oxidation inhibitors
Viscosity index	80 min.
Pour point	-10° C max. (14° F)
Viscosity grades	ISO/ASTM 32 through 220

Some low-speed and/or high-ambient-temperature applications require the higher viscosity grades. High-speed and/or low-temperature applications require the lower viscosity grades.

Industrial extreme-pressure (EP) gear oil

Extreme-pressure gear oils are used to lubricate Timken bearings in most types of heavily loaded industrial equipment (see table D-12). They should be capable of withstanding abnormal shock loads that are common in heavy-duty equipment.

TABLE D-12. SUGGESTED INDUSTRIAL EP GEAR OIL PROPERTIES

	Properties
Base stock	Solvent-refined, high viscosity-index petroleum oil
Additives	Corrosion and oxidation inhibitors Extreme-pressure (EP) additive(1) - 15.8 kg (35 lb.) min.
Viscosity index	80 min.
Pour point	-10° C max. (14° F)
Viscosity grades	ISO/ASTM 100, 150, 220, 320, 460

(1)ASTM D 2782

Industrial EP gear oils should be composed of a highly refined petroleum oil-based stock plus appropriate inhibitors and additives. They should not contain materials that are corrosive or abrasive to bearings. The inhibitors should provide long-term protection from oxidation and protect the bearing from corrosion in the presence of moisture. The oils should resist foaming in service and have good water-separation properties. An EP additive protects against scoring under boundary-lubrication conditions. The viscosity grades suggested represent a wide range. High-temperature and/or slow-speed applications generally require the higher viscosity grades. Low temperatures and/or high speeds require the use of lower viscosity grades.

GREASE LUBRICATION

Grease lubrication is generally applicable to low-to-moderate speed applications that have operating temperatures within the limits of the grease. There is no universal antifriction bearing grease. Each grease has limiting properties and characteristics.

Greases consist of a base oil, a thickening agent and additives. Conventionally, bearing greases have consisted of petroleum base oils thickened to the desired consistency by some form of metallic soap. More recently synthetic base oils have been used with organic and inorganic thickeners. Table D-13 summarizes the composition of typical lubricating greases.

TABLE D-13. COMPOSITION OF GREASES

Base Oil	+	Thickening Agents	+	Additives	=	Lubricating Grease
Mineral oil		Soaps and complex soaps lithium, aluminum, barium, calcium		Rust inhibitors		
Synthetic hydrocarbon				Dyes		
Esters		Non-Soap (inorganic) microgel (clay), carbon black, silica-gel, PTFE		Tactifiers		
Perfluorinated oil				Metal deactivates		
Silicone				Oxidation inhibitors		
		Non-Soap (organic) Urea compounds		Anti-wear EP		

Calcium- and aluminum-based greases have excellent water resistance and are used in industrial applications where water ingress is an issue. Lithium-based greases are multi-purpose and are used in industrial applications and wheel bearings.

Synthetic base oils such as esters, organic esters and silicones used with conventional thickeners and additives typically have higher maximum operating temperatures than petroleum-based greases. Synthetic greases can be designed to operate in temperatures from -73° C (-100° F) to 288° C (550° F).

In table D-14 are the general characteristics of common thickeners used with petroleum base oils.

Use of the thickeners in table D-14 with synthetic hydrocarbon or ester base oils increases the maximum operating temperature by approximately 10° C (50° F).

Using polyurea as a thickener for lubricating fluids is one of the most significant lubrication developments in more than 30 years. Polyurea grease performance is outstanding in a wide range of bearing applications.

CONSISTENCY

Greases may vary in consistency from semi-fluids that are hardly thicker than a viscous oil to solid grades almost as hard as a soft wood.

Consistency is measured by a penetrometer in which a standard weighted cone is dropped into the grease. The distance the cone penetrates (measured in tenths of a millimeter in a specific time) is the penetration number.

The National Lubricating Grease Institute (NLGI) classification of grease consistency is shown in table D-15 below:

TABLE D-14. GENERAL CHARACTERISTICS OF THICKENERS USED WITH PETROLEUM-BASED OILS

Thickener	Typical Dropping Point		Maximum Temperature		Typical Water Resistance
	°C	°F	**°C**	°F	
Lithium soap	**193**	380	**121**	250	Good
Lithium complex	**260+**	500+	**149**	300	Good
Aluminum complex	**249**	480	**149**	300	Excellent
Calcium sulfonate	**299**	570	**177**	350	Excellent
Polyurea	**260**	500	**149**	300	Good

TABLE D-15. NLGI CLASSIFICATIONS

NLGI Grease Grades	Penetration No.
0	355-385
1	310-340
2	265-295
3	220-250
4	175-205
5	130-160
6	85-115

Grease consistency is not fixed; it normally becomes softer when sheared or worked. In the laboratory, this working is accomplished by forcing a perforated plate up and down through a closed container of grease. This working does not compare with the violent shearing action that takes place in a bearing and does not necessarily correlate with actual performance.

LOW TEMPERATURES

Starting torque in a grease-lubricated bearing at low temperatures can be critical. Some greases may function adequately as long as the bearing is operating, but resistance to initial movement may be excessive. In certain smaller machines, starting may be impossible when very cold. Under such operating circumstances, greases containing low-temperature characteristic oils are generally required.

If the operating temperature range is wide, synthetic greases offer advantages. Synthetic greases are available to provide very low starting and running torque at temperatures as low as -73° C (-100° F). In certain instances, these greases perform better in this respect than oil.

An important point concerning lubricating greases is that the starting torque is not necessarily a function of the consistency or the channel properties of the grease. Starting torque is more a function of the individual rheological properties of a particular grease and is best evaluated by application experience.

HIGH TEMPERATURES

The high temperature limit for lubricating greases is generally a function of the thermal and oxidation stability of the fluid and the effectiveness of the oxidation inhibitors. Grease temperature ranges are defined by both the dropping point of the grease thickener and composition of the base oil. Table D-16 shows the temperature ranges of various base oils used in grease formulations.

A rule of thumb, developed from years of testing grease-lubricated bearings, indicates that grease life is halved for every 10° C (50° F) increase in temperature. For example, if a particular grease provides 2000 hours of life at 90° C (194° F), by raising the temperature to 100° C (212° F), reduction in life to approximately 1000 hours would result. On the other hand, 4000 hours could be expected by lowering the temperature to 80° C (176° F).

Thermal stability, oxidation resistance and temperature limitations must be considered when selecting greases for high-temperature applications. In non-relubricatable applications, highly refined mineral oils or chemically stable synthetic fluids are required as the oil component of greases for operation at temperatures above 121° C (250° F).

TABLE D-16. TEMPERATURE RANGES FOR BASE OILS USED IN LUBRICATING GREASES

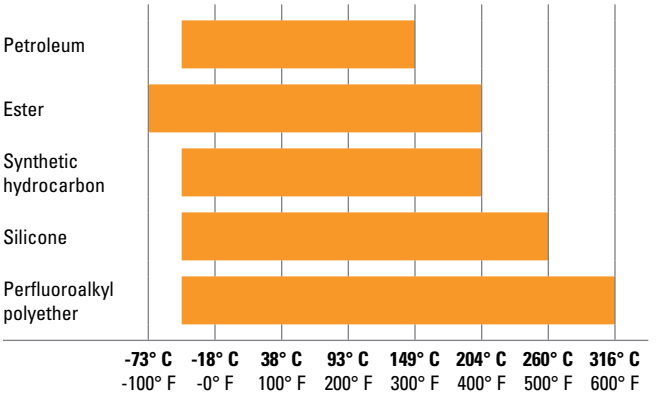

CONTAMINATION

Abrasive Particles

When roller bearings operate in a clean environment, the primary cause of damage is the eventual fatigue of the surfaces where rolling contact occurs. However, when particle contamination enters the bearing system, it is likely to cause damage such as bruising, which can shorten bearing life.

When dirt from the environment or metallic wear debris from some component in the application are allowed to contaminate the lubricant, wear can become the predominant cause of bearing damage. If bearing wear becomes significant, changes will occur to critical bearing dimensions that could adversely affect machine operation.

Bearings operating in a contaminated lubricant exhibit a higher initial rate of wear than those running in an uncontaminated lubricant. With no further contaminant ingress, this wear rate quickly diminishes. The contamination particles are reduced in size as they pass through the bearing contact area during normal operation.

Water

Water and moisture can be particularly conducive to bearing damage. Lubricating greases may provide a measure of protection from this contamination. Certain greases, such as calcium and aluminum-complex, are highly water-resistant.

Sodium-soap greases are water-soluble and should not be used in applications involving water.

Either dissolved or suspended water in lubricating oils can exert a detrimental influence on bearing fatigue life. Water can cause bearing etching that also can reduce bearing fatigue life. The exact mechanism by which water lowers fatigue life is not fully understood. It has been suggested that water enters micro-cracks in the bearing rings that are caused by repeated stress cycles. This leads to corrosion and hydrogen embrittlement in the micro-cracks, reducing the time required for these cracks to propagate to an unacceptable-sized spall.

Water-based fluids, such as water glycol and invert emulsions, also have shown a reduction in bearing fatigue life. Although water from these sources is not the same as contamination, the results support the previous discussion concerning water-contaminated lubricants.

GREASE SELECTION

The successful use of bearing grease depends on the physical and chemical properties of the lubricant as well as application and environmental conditions. Because the choice of grease for a particular bearing under certain service conditions is often difficult to make, you should consult with your lubricant supplier or equipment maker for specific questions about lubrication requirements for your application. You also can contact your Timken engineer for general lubrication guidelines for any application.

Grease must be carefully selected with regard to its consistency at operating temperature. It should not exhibit thickening, separation of oil, acid formation or hardening to any marked degree. It should be smooth, non-fibrous and entirely free from chemically active ingredients. Its dropping point should be considerably higher than the operating temperature.

Timken® application-specific lubricants were developed by leveraging our knowledge of tribology and antifriction bearings, and how these two elements affect overall system performance. Timken lubricants help bearings and related components operate effectively in demanding industrial operations. High-temperature, anti-wear and water-resistant additives offer superior protection in challenging environments. Table D-17 provides an overview of the Timken greases available for general applications. Contact your Timken engineer for a more detailed publication on Timken lubrication solutions.

TABLE D-17. GREASE LUBRICATION SELECTION GUIDE

ENVIRONMENT		APPLICATION
High Wear • Moderate Loads Moderate Speeds Moderate Temperatures	Timken Premium All-Purpose Industrial Grease	Agriculture • Bushings/Ball Joints Truck and Auto Wheel Bearings Heavy-Duty Industrial
Extreme Heat • Heavy Loads High Sliding Wear Dirty Environments Slow Speeds • Shock Loading	Timken Construction and Off-Highway Grease	Agriculture/Mining • Cement Plants Construction/Off Road • Rock Quarry Earth-Moving Equipment Fleet Equipment • Heavy Industry Pivot Pins/Splined Shafts
Wet and Corrosive Conditions Quiet Environments • Light Loads Moderate to High Speeds Moderate Temperatures Light Load Moderate Water	Timken Ball Bearing Pillow Block Grease	Lightly Loaded Pillow Blocks Idler Pulleys • Oven Conveyors Electric Motors • Fans • Pumps Alternators • Generators
Corrosive Media • Extreme Heat Heavy Loads • Wet Conditions Slow to Moderate Speeds	Timken Mill Grease	Aluminum Mills • Paper Mills Steel Mills • Offshore Rigs Power Generation
Incidental Food Contact Hot and Cold Temperatures Moderate to High Speeds Medium Loads	Timken Food Safe Grease	Food and Beverage Industries Pharmaceuticals
Extreme Low and High Temperatures Severe Loads Corrosive Media Slow to Moderate Speeds	Timken Synthetic Industrial Grease	Wind Energy Main Bearing Pulp and Paper Machines General Heavy Industry Marine Applications Centralized Grease Systems
Moderate Speeds Light to Moderate Loads Moderate Temperatures Moderate Water	Timken Multi-Use Lithium Grease	General Industrial Applications Pins and Bushings • Track Rollers Water Pumps Plain and Antifriction Bearings

This selection guide is not intended to replace the specifications by the equipment builder, who is responsible for its performance.

Many bearing applications require lubricants with special properties or lubricants formulated specifically for certain environments, such as:

- Friction oxidation (fretting corrosion).
- Chemical and solvent resistance.
- Food handling.

For assistance with these or other areas requiring special lubricants, consult your Timken engineer.

GREASE USE GUIDELINES

It is important to use the proper amount of grease in the application. In typical industrial applications, the bearing cavity should be kept approximately one-third to one-half full. Less grease may result in the bearing being starved for lubrication. More grease may result in churning. Both conditions may result in excessive heat generation. As the grease temperature rises, viscosity decreases and the grease becomes thinner. This can reduce the lubricating effect and increase leakage of the grease from the bearing. It also may cause the grease components to separate, leading to a general breakdown of the lubricant properties. As the grease breaks down, bearing torque increases. In the case of excess grease resulting in churning, torque may also increase due to the resistance caused by the grease.

For best results, there should be ample space in the housing to allow room for excess grease to be thrown from the bearing. However, it is equally important that the grease be retained all around the bearing. If a large void exists between the bearings, grease closures should be used to prevent the grease from leaving the bearing area.

Only in low-speed applications may the housing be entirely filled with grease. This method of lubrication is a safeguard against the entry of foreign matter, where sealing provisions are inadequate for exclusion of contaminants or moisture.

During periods of non-operation, it is often wise to completely fill the housings with grease to protect the bearing surfaces. Prior to restarting operation, remove the excess grease and restore the proper level.

Applications utilizing grease lubrication should have a grease fitting and a vent at opposite ends of the housing near the top. A drain plug should be located near the bottom of the housing to allow the old grease to purge from the bearing.

Bearings should be relubricated at regular intervals to help prevent damage. Relubrication intervals are difficult to determine. If plant practice or experience with other applications is not available, consult your lubricant supplier.

Timken offers a range of lubricants to help bearings and related components operate effectively in demanding industrial operations. High-temperature, anti-wear and water-resistant additives offer greater protection in challenging environments. Timken also offers a line of single- and multi-point lubricators to simplify grease delivery.

Fig. D-10. Grease can easily be packed by hand.

Fig. D-11. Mechanical grease packer.

Grease application methods

Grease, in general, is easier to use than oil in industrial bearing applications. Most bearings that are initially packed with grease require periodic relubrication to operate efficiently.

Grease should be packed into the bearing so that it gets between the rolling elements.

Grease can be easily packed into small- and medium-size bearings by hand (fig. D-10). In shops where bearings are frequently regreased, a mechanical grease packer that forces grease through the bearing under pressure may be appropriate (fig. D-11). Regardless of the method, after packing the internal areas of the bearing, a small amount of grease also should be smeared on the outside of the rollers.

The two primary considerations that determine the relubrication cycle are operating temperature and sealing efficiency. High-operating-temperature applications generally require more frequent regreasing. The less efficient the seals, the greater the grease loss and the more frequently grease must be added.

Grease should be added any time the amount in the bearing falls below the desired amount. The grease should be replaced when its lubrication properties have been reduced through contamination, high temperature, water, oxidation or any other factors. For additional information on appropriate regreasing cycles, consult with the equipment manufacturer or your Timken engineer.

GREASE LUBRICATIONS FOR BEARING/HOUSING ASSEMBLIES

Polyurea and lithium-based greases are normally preferred for general-purpose bearing lubrication and are advantageous in high moisture applications. Both greases have good water-resistant characteristics. For temperature ranges of standard greases, see table D-16.

Frictional torque is influenced by the quantity and the quality of lubricant present. Excessive quantities of grease cause churning. The adverse effects of churn are accelerated with increases in operating speed. The churn results in excessive temperatures, separation of the grease components, and breakdown in lubrication values. In normal-speed applications, the housings should be kept approximately one-third to one-half full. Only in low-speed applications may the housing be entirely filled with grease. This method of lubrication is a safeguard against the entry of foreign matter, where sealing provisions are inadequate for exclusion of contaminants or moisture.

GENERAL-PURPOSE INDUSTRIAL GREASE

Polyurea and and lithium-based greases are typical of greases that can be used to lubricate many Timken bearing applications in all types of standard equipment.

Special consideration should be given to applications where speed, load, temperature or environmental conditions are extreme.

Lithium greases, lithium complex greases, or calcium sulfonate thickened grease are suitable for most centralized, single-point, or manually lubricated product. They should be a smooth, homogeneous and uniform, premium-quality product composed of mineral or synthetic oil, a thickener and appropriate inhibitors (see table D-18).

TABLE D-18. SUGGESTED LITHIUM SOAP, LITHIUM COMPLEX AND CALCIUM SULFONATE GREASE PROPERTIES

Thickener type	Lithium Complex, or equivalent
Consistency	NLGI No.1 or No. 2
Additives	Anti-wear, corrosion and oxidation inhibitors
Base oil	Mineral oil or synthetic
Viscosity at 40° C	ISO VG 150-220
Viscosity index	80 min.
Pour point	-18° C (0° F) max.

They should not contain materials that are corrosive or abrasive to roller bearings. The grease should have excellent mechanical and chemical stability. The grease should contain inhibitors to provide long-term protection against oxidation in high-performance applications and protect the bearings from corrosion in the presence of moisture. The suggested base oil viscosity covers a fairly wide range. Lower viscosity products should be used in high-speed and/or lightly loaded applications to minimize heat generation and torque. Higher viscosity products should be used in moderate- to low-speed applications and under heavy loads to maximize lubricant film thickness. Speed ratings are listed for each size/class part number in the Spherical Roller Bearing Catalog (order no. 10446) on pages 59-88. When application speeds exceed 70 percent of grease speed rating, consider increasing RIC by one ISO clearance range (CNormal to C3). Table D-19 is provided as a reference for typical grease thickener compatibilities. Consult your lubricant supplier for further information for your specific requirement. For general industrial applications, consider a grease that is NLGI No. 1 or No. 2, with a ISO 150 to 220 viscosity grade.

NOTE

Mixing greases can result in improper bearing lubrication. Always follow the specific lubrication instructions of your equipment supplier.

TABLE D-19. GREASE COMPATIBILITY CHART

■ = Best Choice
■ = Compatible
■ = Borderline
■ = Incompatible

	Al Complex	Ba Complex	Ca Stearate	Ca 12 Hydroxy	Ca Complex	Ca Sulfonate	Non-Soap Clay	Li Stearate	Li 12 Hydroxy	Li Complex	Polyurea	Polyurea S S
Aluminum Complex	Best Choice	Incompatible	Incompatible	Compatible	Incompatible	Borderline	Incompatible	Incompatible	Incompatible	Compatible	Incompatible	Compatible
Timken Food Safe	Best Choice	Incompatible	Incompatible	Compatible	Incompatible	Borderline	Incompatible	Incompatible	Incompatible	Compatible	Incompatible	Compatible
Barium Complex	Incompatible	Best Choice	Incompatible	Compatible	Incompatible	Compatible	Incompatible	Incompatible	Incompatible	Incompatible	Incompatible	Borderline
Calcium Stearate	Incompatible	Incompatible	Best Choice	Compatible	Incompatible	Compatible	Compatible	Compatible	Borderline	Compatible	Incompatible	Compatible
Calcium 12 Hydroxy	Compatible	Compatible	Compatible	Best Choice	Borderline	Borderline	Compatible	Compatible	Compatible	Compatible	Incompatible	Compatible
Calcium Complex	Incompatible	Incompatible	Incompatible	Borderline	Best Choice	Incompatible	Incompatible	Incompatible	Incompatible	Compatible	Compatible	Compatible
Calcium Sulfonate	Borderline	Compatible	Compatible	Borderline	Incompatible	Best Choice	Incompatible	Borderline	Borderline	Compatible	Incompatible	Compatible
Timken Premium Mill Timken Heavy-Duty Moly	Borderline	Compatible	Compatible	Borderline	Incompatible	Best Choice	Incompatible	Borderline	Borderline	Compatible	Incompatible	Compatible
Clay Non-Soap	Incompatible	Incompatible	Compatible	Compatible	Incompatible	Incompatible	Best Choice	Incompatible	Incompatible	Incompatible	Incompatible	Borderline
Lithium Stearate	Incompatible	Incompatible	Compatible	Compatible	Incompatible	Borderline	Incompatible	Best Choice	Compatible	Compatible	Incompatible	Compatible
Lithium 12 Hydroxy	Incompatible	Incompatible	Borderline	Compatible	Incompatible	Borderline	Incompatible	Compatible	Best Choice	Compatible	Incompatible	Compatible
Lithium Complex	Compatible	Incompatible	Compatible	Compatible	Compatible	Compatible	Incompatible	Compatible	Compatible	Best Choice	Incompatible	Compatible
Polyurea Conventional	Incompatible	Incompatible	Incompatible	Incompatible	Compatible	Incompatible	Incompatible	Incompatible	Incompatible	Incompatible	Best Choice	Compatible
Polyurea Shear Stable	Compatible	Borderline	Compatible	Compatible	Compatible	Compatible	Borderline	Compatible	Compatible	Compatible	Compatible	Best Choice
Timken Multi-Use	Incompatible	Incompatible	Borderline	Compatible	Incompatible	Borderline	Incompatible	Compatible	Best Choice	Compatible	Incompatible	Compatible
Timken All -Purpose Timken Synthetic	Compatible	Incompatible	Compatible	Compatible	Compatible	Compatible	Incompatible	Compatible	Compatible	Best Choice	Incompatible	Compatible
Timken Pillow Block	Compatible	Borderline	Compatible	Compatible	Compatible	Compatible	Borderline	Compatible	Compatible	Compatible	Compatible	Best Choice

APPLICATION CONSIDERATIONS

For higher-speed applications (operating at 75 percent of the grease speed rating or more), a grease with a lighter base oil viscosity (ISO 100-150) can be considered. Conversely, for lower-speed applications, a grease with a heavier base oil viscosity (ISO 320-460) can be considered. For lower-speed applications operating at colder start-up temperatures (>-18° C [0° F]), consider a softer grease (NLGI grade 1) with an approved EP additive. The lighter grade will allow more grease flow into the bearing contact area and the EP additive will reduce wear during start-up. An ISO 460 base oil viscosity also can be considered.

When lower-speed applications operate at higher temperatures (>149° C [300° F]), consult a local Timken engineer.

GREASE FILL

For normal industrial applications, fill the bearing void to 100 percent full and the housing void to 40 – 60 percent full. For high-speed applications, fill the bearing void to 100 percent full and the housing void to 30 – 40 percent full. The free volume of the bearing can be estimated by first calculating the solid ring volume of the bearing. Then, weigh the bearing and divide the weight by the density of steel. This actual volume can then be subtracted from the solid ring volume. The resultant value is an estimate of the free volume of the bearing available for grease fill. When the grease volume is determined for the application, multiplying this value by the density of the grease will yield the approximate weight of the grease fill. After weighing the grease required, apply approximately 75 percent of the amount into the cage and roller assembly. The remaining amount of grease should then be applied to both inner and outer rings in equal amounts. The preservatives applied to bearing components are compatible with nearly all industrial greases and should not be wiped or cleaned prior to packing the bearing. If in doubt, contact a local Timken engineer.

SPHERICAL ROLLER BEARINGS

Timken® spherical roller bearings feature all of the characteristics that have made Timken renowned – superior design, reliable performance and comprehensive technical support. Spherical roller bearings are designed to manage high radial loads and perform consistently, even when misalignment, marginal lubrication, contamination, extreme speeds and critical application stresses are present.

SPHERICAL ROLLER BEARINGS NOMENCLATURE

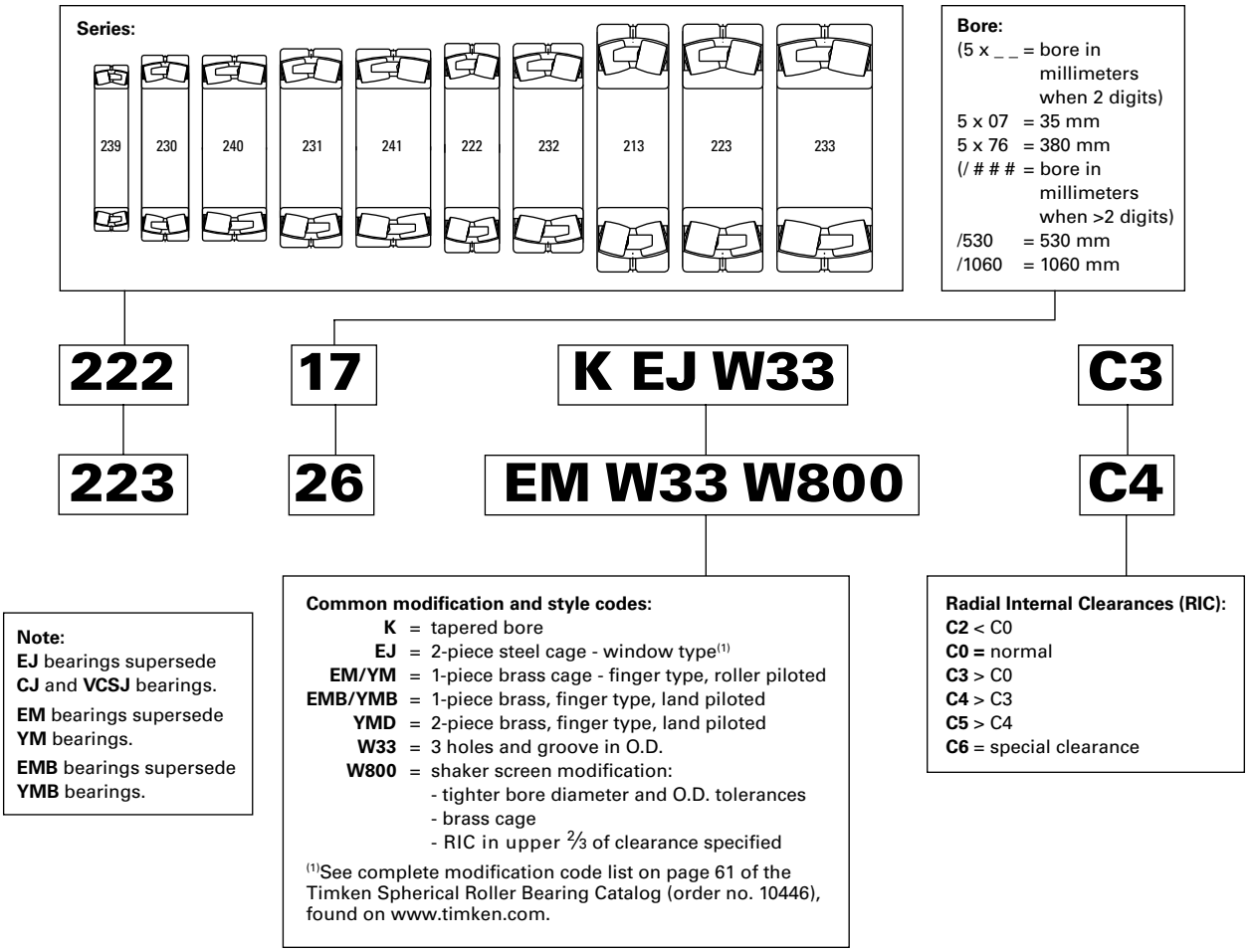

Fig. D-12. Timken® spherical roller bearing nomenclature.

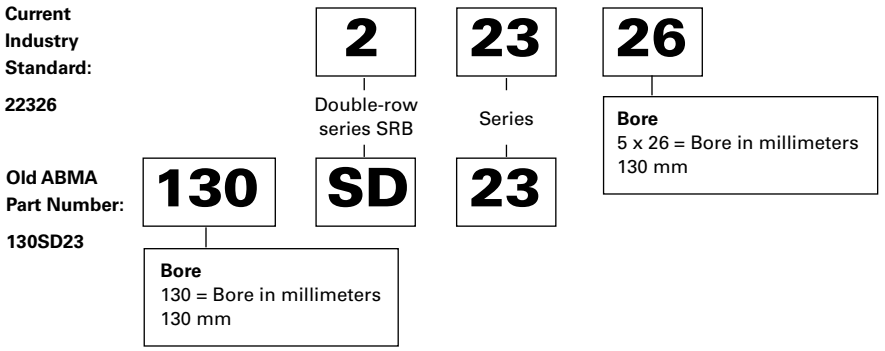

Fig. D-13. Equivalence between current ISO and old ABMA part numbering.

222 SERIES (225, 222 SERIES SAF, SDAF)

- Bearings are available with a tapered bore for adapter-type mounting. To order, add the suffix K to bearing number (e.g., 23120K).
- Consult your Timken engineer and www.timken.com for up-to-date information about the availability of the bearings you have selected.

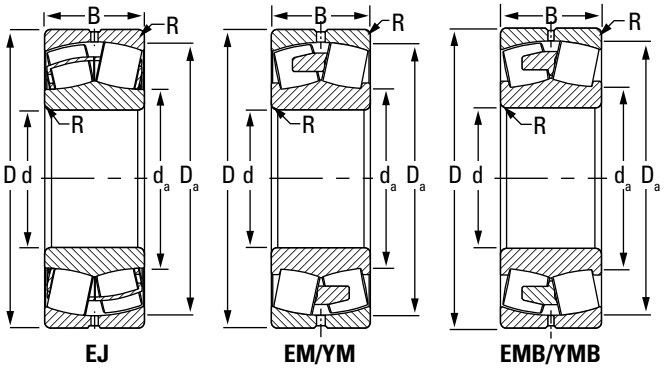

Bearing Part No.	Bearing Dimensions			Load Ratings		Cage Type	Mounting Data			Equivalent Radial Load Factors[2]				Geometry Factor[3]	Thermal Speed Ratings[4]		Wt.
											Dynamic		Static				
							Fillet[1] (Max.)	Backing Dia.			$\frac{F_a}{F_r} \le e$	$\frac{F_a}{F_r} > e$	In All Cases				
								Shaft	Housing		X = 1	X = 0.67					
	Bore d	O.D. D	Width B	Dynamic C	Static Co		R	d_a	D_a	e	Y	Y	Y_0	C_g	Oil	Grease	
	mm in.	**mm** in.	**mm** in.	**kN** lbf.	**kN** lbf.		**mm** in.	**mm** in.	**mm** in.						RPM	RPM	**kg** lbs.
22209	**45** 1.7717	**85** 3.3465	**23** 0.9055	**104** 23500	**101** 22800	EJ / EM	**1** 0.04	**55** 2.2	**77** 3	0.26	2.64	3.93	2.58	0.046	6800	5500	**0.6** 1.3
22210	**50** 1.9685	**90** 3.5433	**23** 0.9055	**112** 25200	**112** 25100	EJ / EM	**1** 0.04	**59** 2.3	**82** 3.2	0.24	2.84	4.23	2.78	0.049	6200	5000	**0.6** 1.3
22211	**55** 2.1654	**100** 3.937	**25** 0.9843	**134** 30100	**134** 30100	EJ / EM	**1.5** 0.06	**66** 2.6	**91** 3.6	0.23	2.95	4.4	2.89	0.052	5800	4700	**0.9** 2.0
22212	**60** 2.3622	**110** 4.3307	**28** 1.1024	**163** 36600	**164** 36900	EJ / EM	**1.5** 0.06	**72** 2.8	**100** 4	0.24	2.84	4.23	2.78	0.055	5500	4400	**1.2** 2.6
22213	**65** 2.5591	**120** 4.7244	**31** 1.2205	**198** 44600	**204** 45900	EJ / EM	**1.5** 0.06	**78** 3.1	**109** 4.3	0.24	2.79	4.15	2.73	0.058	5100	4200	**1.6** 3.5
22214	**70** 2.7559	**125** 4.9213	**31** 1.2205	**205** 46000	**219** 49200	EJ / EM	**1.5** 0.06	**84** 3.3	**114** 4.5	0.23	2.9	4.32	2.84	0.063	4800	3900	**1.6** 3.5
22215	**75** 2.9528	**130** 5.1181	**31** 1.2205	**222** 49900	**240** 54100	EJ	**1.5** 0.06	**88** 3.5	**120** 4.7	0.22	3.14	4.67	3.07	0.062	4600	3700	**1.7** 3.7
22216	**80** 3.1496	**140** 5.5118	**33** 1.2992	**254** 57200	**278** 62500	EJ / EM	**2** 0.08	**95** 3.7	**129** 5.1	0.22	3.14	4.67	3.07	0.065	4300	3500	**2.2** 4.8
22216	**80** 3.1496	**140** 5.5118	**33** 1.2992	**245** 55100	**263** 59200	EJ / EM	**2** 0.08	**95** 3.7	**129** 5.1	0.22	3.14	4.67	3.07	0.065	4400	3600	**2.2** 4.8
22217	**85** 3.3465	**150** 5.9055	**36** 1.4173	**286** 64200	**302** 67900	EJ / EM	**2** 0.08	**101** 4	**139** 5.5	0.22	3.07	4.57	3	0.068	4200	3400	**2.7** 5.9
22218	**90** 3.5433	**160** 6.2992	**40** 1.5748	**355** 79700	**388** 87200	EJ / EM	**2** 0.08	**105** 4.2	**146** 5.8	0.23	2.9	4.31	2.83	0.07	4000	3300	**3.5** 7.7
22219	**95** 3.7402	**170** 6.6929	**43** 1.6929	**385** 86600	**441** 99000	EJ / EM	**2** 0.08	**114** 4.5	**155** 6.1	0.23	2.88	4.29	2.82	0.076	3900	3200	**4.2** 9.2
22220	**100** 3.937	**180** 7.0866	**46** 1.811	**435** 97700	**502** 113000	EJ / EM	**2** 0.08	**120** 4.7	**163** 6.4	0.24	2.85	4.24	2.78	0.079	3800	3100	**5.0** 11.0
22222	**110** 4.3307	**200** 7.874	**53** 2.0866	**555** 125000	**653** 147000	EJ / EM	**2** 0.08	**133** 5.2	**182** 7.2	0.25	2.73	4.06	2.67	0.084	3500	2900	**7.2** 15.8

[1]Maximum shaft or housing fillet radius that bearing corners will clear.
[2]These factors apply for both inch and metric calculations. See Timken Engineering Manual (order no. 10424) for instructions on use.
[3]Geometry constant for Lubrication Life Factor a_{31} is found in the Bearing Ratings section of the Engineering Manual (order no. 10424).
[4]See thermal speed ratings in the Engineering Manual (order no. 10424).
NOTE: Where EJ and EM/EMB have different load ratings, the more conservative one was taken to use for both assemblies.
NOTE: Tolerance and shaft diameters are shown in the tables D-2 and D-3 on pages D-5 and D-6 as variances from nominal bearing bore.

Continued on next page.

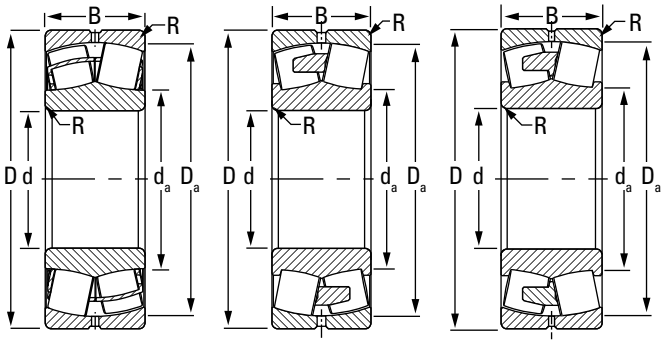

EJ EM/YM EMB/YMB

Continued from previous page.

Bearing Part No.	Bearing Dimensions			Load Ratings		Cage Type	Mounting Data			Equivalent Radial Load Factors(2)				Geometry Factor(3)	Thermal Speed Ratings(4)		Wt.
											Dynamic		Static				
							Fillet(1) (Max.)	Backing Dia.			$\frac{F_a}{F_r} \le e$	$\frac{F_a}{F_r} > e$	In All Cases				
								Shaft	Housing		X = 1	X = 0.67					
	Bore d	O.D. D	Width B	Dynamic C	Static Co		R	d_a	D_a	e	Y	Y	Y_0	C_g	Oil	Grease	
	mm in.	**mm** in.	**mm** in.	**kN** lbf.	**kN** lbf.		**mm** in.	**mm** in.	**mm** in.						RPM	RPM	**kg** lbs.
22224	**120** 4.7244	**215** 8.4646	**58** 2.2835	**647** 145000	**772** 174000	EJ / EM	**2** 0.08	**143** 5.6	**196** 7.7	0.25	2.7	4.02	2.64	0.081	3200	2600	**9.0** 19.8
22226	**130** 5.1181	**230** 9.0551	**64** 2.5197	**757** 170000	**945** 212000	EJ / EM	**2.5** 0.1	**155** 6.1	**210** 8.3	0.26	2.62	3.9	2.56	0.079	2900	2400	**11.3** 24.9
22228	**140** 5.5118	**250** 9.8425	**68** 2.6772	**863** 194000	**1060** 237000	EJ / EM	**2.5** 0.1	**167** 6.6	**228** 9	0.25	2.67	3.98	2.61	0.082	2600	2200	**14.2** 31.2
22230	**150** 5.9055	**270** 10.6299	**73** 2.874	**1000** 225000	**1230** 276000	EJ / EM	**2.5** 0.1	**179** 7	**246** 9.7	0.25	2.69	4	2.63	0.087	2400	2000	**17.8** 39.2
22232	**160** 6.2992	**290** 11.4173	**80** 3.1496	**1170** 263000	**1450** 326000	EJ / EM	**2.5** 0.1	**192** 7.5	**264** 10.4	0.26	2.62	3.91	2.57	0.09	2200	1800	**23.0** 50.6
22234	**170** 6.6929	**310** 12.2047	**86** 3.3858	**1340** 301000	**1680** 379000	EJ / EM	**3** 0.12	**204** 8	**281** 11.1	0.26	2.61	3.89	2.55	0.094	2000	1700	**28.5** 62.7
22236	**180** 7.0866	**320** 12.5984	**86** 3.3858	**1340** 301000	**1700** 382000	EJ / EM	**3** 0.12	**215** 8.5	**292** 11.5	0.25	2.72	4.05	2.66	0.097	1900	1600	**29.1** 64.0
22238	**190** 7.4803	**340** 13.3858	**92** 3.622	**1550** 348000	**1960** 440000	EJ / EMB	**3** 0.12	**226** 8.9	**310** 12.2	0.25	2.67	3.98	2.62	0.1	1800	1500	**36.1** 79.4
22240	**200** 7.874	**360** 14.1732	**98** 3.8583	**1580** 356000	**2010** 452000	EJ / EMB	**3** 0.12	**236** 9.3	**323** 12.7	0.27	2.5	3.72	2.44	0.103	1700	1500	**43.6** 95.9
22244	**220** 8.6614	**400** 15.748	**108** 4.252	**1850** 415000	**2310** 520000	EJ / EMB	**3** 0.12	**261** 10.3	**359** 14.1	0.27	2.51	3.73	2.45	0.11	1500	1300	**59.4** 130.7

(1)Maximum shaft or housing fillet radius that bearing corners will clear.
(2)These factors apply for both inch and metric calculations. See engineering section for instructions on use.
(3)Geometry constant for Lubrication Life Factor a_{31} is found in the Bearing Ratings section of the Engineering Manual (order no. 10424).
(4)See thermal speed ratings in the Engineering Manual (order no. 10424).
NOTE: Where EJ and EM/EMB have different load ratings, the more conservative one was taken to use for both assemblies.
NOTE: Tolerance and shaft diameters are shown in the tables D-2 and D-3 on pages D-5 and D-6 as variances from nominal bearing bore.

223 SERIES (226, 223 SERIES SAF, SDAF)

- Bearings are available with a tapered bore for adapter-type mounting. To order, add the suffix K to bearing number (e.g., 23120K).
- Consult your Timken engineer and www.timken.com for up-to-date information about the availability of the bearings you have selected.

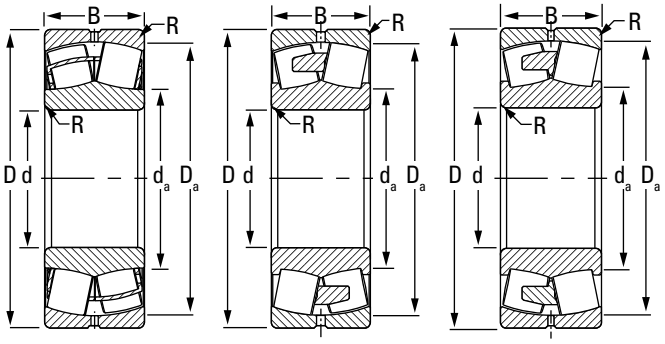

EJ EM/YM EMB/YMB

Bearing Part No.	Bearing Dimensions			Load Ratings		Cage Type	Mounting Data			Equivalent Radial Load Factors(2)				Geometry Factor(3)	Thermal Speed Ratings(4)		Wt.
											Dynamic		Static				
							Fillet(1) (Max.)	Backing Dia.			$\frac{F_a}{F_r} \le e$	$\frac{F_a}{F_r} > e$	In All Cases				
								Shaft	Housing		X = 1	X = 0.67					
	Bore d	O.D. D	Width B	Dynamic C	Static Co		R	d_a	D_a	e	Y	Y	Y_0	C_g	Oil	Grease	
	mm in.	mm in.	mm in.	kN lbf.	kN lbf.		mm in.	mm in.	mm in.						RPM	RPM	kg lbs.
22315	**75** 2.9528	**160** 6.2992	**55** 2.1654	**450** 101000	**478** 107000	EJ / EM	**2** 0.08	**97** 3.8	**144** 5.7	0.33	2.04	3.04	2	0.071	3900	3300	**5.4** 11.9
22316	**80** 3.1496	**170** 6.6929	**58** 2.2835	**499** 112000	**534** 120000	EJ / EM	**2** 0.08	**103** 4.1	**153** 6	0.33	2.06	3.06	2.01	0.073	3700	3200	**6.4** 14.1
22317	**85** 3.3465	**180** 7.0866	**60** 2.3622	**569** 128000	**623** 140000	EJ / EM	**2.5** 0.1	**110** 4.3	**162** 6.4	0.32	2.11	3.14	2.06	0.076	3500	3000	**7.5** 16.5
22318	**90** 3.5433	**190** 7.4803	**64** 2.5197	**634** 143000	**703** 158000	EJ / EM	**2.5** 0.1	**116** 4.6	**171** 6.7	0.32	2.09	3.11	2.04	0.079	3300	2800	**8.8** 19.4
22319	**95** 3.7402	**200** 7.874	**67** 2.6378	**694** 156000	**774** 174000	EJ / EM	**2.5** 0.1	**122** 4.8	**180** 7.1	0.32	2.1	3.13	2.05	0.082	3000	2600	**10.2** 22.4
22320	**100** 3.937	**215** 8.4646	**73** 2.874	**779** 175000	**856** 193000	EJ / EM	**2.5** 0.1	**130** 5.1	**193** 7.6	0.33	2.06	3.07	2.02	0.072	2800	2400	**12.8** 28.2
22322	**110** 4.3307	**240** 9.4488	**80** 3.1496	**949** 213000	**1050** 236000	EJ / EM	**2.5** 0.1	**144** 5.7	**215** 8.5	0.32	2.08	3.1	2.04	0.076	2500	2100	**17.8** 39.2
22324	**120** 4.7244	**260** 10.2362	**86** 3.3858	**1080** 244000	**1210** 272000	EJ / EM	**2.5** 0.1	**157** 6.2	**234** 9.2	0.32	2.11	3.15	2.07	0.081	2100	1900	**22.0** 48.4
22326	**130** 5.1181	**280** 11.0236	**93** 3.6614	**1250** 281000	**1410** 318000	EJ / EM	**3** 0.12	**169** 6.7	**252** 9.9	0.32	2.11	3.14	2.06	0.085	1900	1700	**27.4** 60.3
22328	**140** 5.5118	**300** 11.811	**102** 4.0157	**1450** 326000	**1670** 375000	EJ / EM	**3** 0.12	**182** 7.1	**270** 10.6	0.33	2.06	3.06	2.01	0.089	1700	1500	**34.5** 75.9
22330	**150** 5.9055	**320** 12.5984	**108** 4.252	**1700** 382000	**2010** 452000	EJ / EMB	**3** 0.12	**194** 7.6	**288** 11.3	0.33	2.08	3.09	2.03	0.093	1600	1400	**43.0** 94.6
22332	**160** 6.2992	**340** 13.3858	**114** 4.4882	**1890** 424000	**2250** 507000	EJ / EMB	**3** 0.12	**207** 8.1	**306** 12	0.32	2.09	3.11	2.04	0.096	1500	1300	**51.0** 112.2
22334	**170** 6.6929	**360** 14.1732	**120** 4.7244	**2100** 471000	**2510** 565000	EJ / EMB	**3** 0.12	**219** 8.6	**325** 12.8	0.32	2.11	3.15	2.07	0.1	1300	1200	**59.9** 131.8
22336	**180** 7.0866	**380** 14.9606	**126** 4.9606	**2290** 514000	**2770** 623000	EJ / EMB	**3** 0.12	**232** 9.2	**343** 13.5	0.32	2.13	3.17	2.08	0.083	1200	1100	**70.0** 154.0
22338	**190** 7.4803	**400** 15.748	**132** 5.1969	**2490** 559000	**3010** 678000	EJ / EMB	**4** 0.16	**245** 9.6	**361** 14.2	0.32	2.12	3.15	2.07	0.086	1200	1000	**80.9** 178.0
22340	**200** 7.874	**420** 16.5354	**138** 5.4331	**2260** 507000	**2910** 655000	YMB	**4** 0.157	**247** 9.74	**369** 14.52	0.33	2.02	3.01	1.98	0.076	1100	970	**93.0** 204.6

(1)Maximum shaft or housing fillet radius that bearing corners will clear.
(2)These factors apply for both inch and metric calculations. See engineering section for instructions on use.
(3)Geometry constant for Lubrication Life Factor a_{31} is found in the Bearing Ratings section of the Engineering Manual (order no. 10424).
(4)See thermal speed ratings in the Engineering Manual (order no. 10424).
NOTE: Where EJ and EM/EMB have different load ratings, the more conservative one was taken to use for both assemblies.
NOTE: Tolerance and shaft diameters are shown in the tables D-2 and D-3 on pages D-5 and D-6 as variances from nominal bearing bore.

230 SERIES (230K SERIES SAF, SDAF)

- Bearings are available with a tapered bore for adapter-type mounting. To order, add the suffix K to bearing number (e.g., 23120K).
- Consult your Timken engineer and www.timken.com for up-to-date information about the availability of the bearings you have selected.

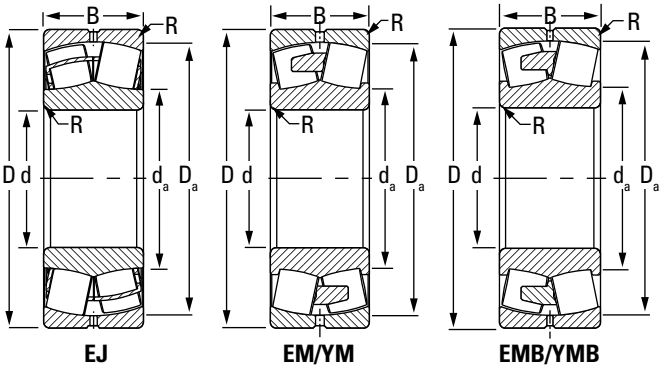

Bearing Part No.	Bearing Dimensions			Load Ratings		Cage Type	Mounting Data			Equivalent Radial Load Factors(2)				Geometry Factor(3)	Thermal Speed Ratings(4)		Wt.
										Dynamic			Static				
							Fillet(1) (Max.)	Backing Dia.			$\frac{F_a}{F_r} \le e$	$\frac{F_a}{F_r} > e$	In All Cases				
	Bore	O.D.	Width	Dynamic	Static			Shaft	Housing		X = 1	X = 0.67			Oil	Grease	
	d	D	B	C	Co		R	d_a	D_a	e	Y	Y	Y_0	C_g			
	mm in.	mm in.	mm in.	kN lbf.	kN lbf.		mm in.	mm in.	mm in.						RPM	RPM	kg lbs.
23024	**120** 4.7244	**180** 7.0866	**46** 1.811	**408** 91700	**574** 129000	EJ	**2** 0.08	**134** 5.3	**167** 6.6	0.22	3.02	4.49	2.95	0.084	3300	2700	**4.0** 8.8
24024	**120** 4.7244	**180** 7.0866	**60** 2.3622	**523** 117000	**762** 171000	EJ	**2** 0.08	**132** 5.2	**167** 6.6	0.29	2.32	3.45	2.26	0.083	2700	2200	**5.2** 11.4
23026	**130** 5.1181	**200** 7.874	**52** 2.0472	**518** 116000	**723** 162000	EJ	**2** 0.08	**146** 5.8	**185** 7.3	0.23	2.94	4.37	2.87	0.089	3100	2500	**5.9** 13.0
23028	**140** 5.5118	**210** 8.2677	**53** 2.0866	**551** 124000	**802** 180000	EJ	**2** 0.08	**158** 6.2	**196** 7.7	0.22	3.1	4.61	3.03	0.085	2800	2300	**6.2** 13.6
23030	**150** 5.9055	**225** 8.8583	**56** 2.2047	**621** 140000	**911** 205000	EJ / EM	**2** 0.08	**169** 6.7	**210** 8.3	0.21	3.14	4.68	3.07	0.089	2600	2100	**7.7** 16.9
23032	**160** 6.2992	**240** 9.4488	**60** 2.3622	**705** 159000	**1040** 235000	EJ / EM	**2** 0.08	**180** 7.1	**224** 8.8	0.22	3.12	4.65	3.05	0.093	2400	2000	**9.4** 20.7
23034	**170** 6.6929	**260** 10.2362	**67** 2.6378	**858** 193000	**1250** 282000	EJ / EM	**2** 0.08	**192** 7.6	**242** 9.5	0.22	3.02	4.49	2.95	0.097	2200	1800	**12.8** 28.2
23036	**180** 7.0866	**280** 11.0236	**74** 2.9134	**1020** 229000	**1480** 332000	EJ / EM	**2** 0.08	**204** 8	**260** 10.2	0.23	2.91	4.34	2.85	0.093	2000	1700	**16.8** 37.0
23038	**190** 7.4803	**290** 11.4173	**75** 2.9528	**1060** 239000	**1580** 355000	EJ / EM	**2** 0.08	**214** 8.4	**270** 10.6	0.23	3	4.47	2.93	0.096	1900	1600	**17.8** 39.2
23040	**200** 7.874	**310** 12.2047	**82** 3.2283	**1230** 276000	**1760** 395000	EJ / EM	**2** 0.08	**225** 8.9	**289** 11.4	0.23	2.95	4.4	2.89	0.095	1800	1500	**22.6** 49.7
23044	**220** 8.6614	**340** 13.3858	**90** 3.5433	**1340** 300000	**1970** 443000	EJ / EM	**2.5** 0.1	**247** 9.7	**313** 12.3	0.24	2.77	4.13	2.71	0.105	1700	1400	**29.8** 65.6
23048	**240** 9.4488	**360** 14.1732	**92** 3.622	**1400** 315000	**2140** 480000	EJ / EM	**2.5** 0.1	**267** 10.5	**334** 13.1	0.23	2.91	4.34	2.85	0.111	1500	1300	**31.9** 70.2
23052	**260** 10.2362	**400** 15.748	**104** 4.0945	**1820** 409000	**2740** 617000	EJ / EMB	**3** 0.12	**291** 11.5	**369** 14.5	0.24	2.85	4.24	2.78	0.078	1300	1100	**47.6** 104.7
23056	**280** 11.024	**420** 16.535	**106** 4.173	**1660** 373000	**2790** 627000	YMB	**3** 0.12	**312** 12.3	**389** 15.3	0.23	2.92	4.35	2.86	0.088	1100	930	**51.0** 112.2

(1)Maximum shaft or housing fillet radius that bearing corners will clear.
(2)These factors apply for both inch and metric calculations. See engineering section for instructions on use.
(3)Geometry constant for Lubrication Life Factor a_{31} is found in the Bearing Ratings section of the Engineering Manual (order no. 10424).
(4)See thermal speed ratings in the Engineering Manual (order no. 10424).
NOTE: Where EJ and EM/EMB have different load ratings, the more conservative one was taken to use for both assemblies.
NOTE: Tolerance and shaft diameters are shown in the tables D-2 and D-3 on pages D-5 and D-6 as variances from nominal bearing bore.

Continued on next page.

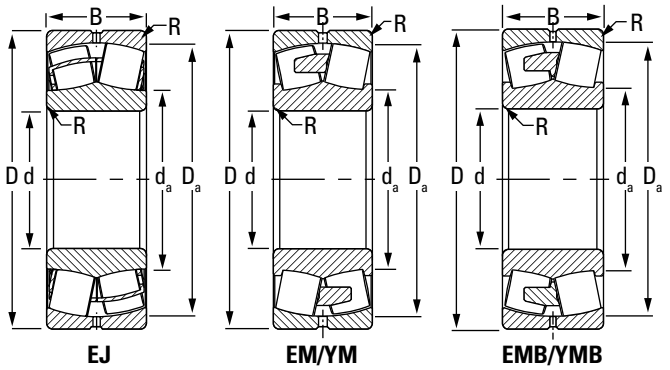

Continued from previous page.

Bearing Part No.	Bearing Dimensions			Load Ratings		Cage Type	Mounting Data			Equivalent Radial Load Factors(2)				Geometry Factor(3)	Thermal Speed Ratings(4)		Wt.
											Dynamic		Static				
							Fillet(1) (Max.)	Backing Dia.			$\frac{F_a}{F_r} \le e$	$\frac{F_a}{F_r} > e$	In All Cases				
	Bore d	O.D. D	Width B	Dynamic C	Static Co		R	Shaft d_a	Housing D_a	e	X = 1 Y	X = 0.67 Y	Y_0	C_g	Oil	Grease	
	mm in.	**mm** in.	**mm** in.	**kN** lbf.	**kN** lbf.		**mm** in.	**mm** in.	**mm** in.						RPM	RPM	**kg** lbs.
23060	**300** 11.811	**460** 18.11	**118** 4.646	**2120** 477000	**3540** 796000	YMB	**3** 0.12	**336** 13.2	**425** 16.8	0.24	2.87	4.27	2.8	0.093	980	830	**71.0** 156.2
23064	**320** 12.598	**480** 18.898	**121** 4.764	**2200** 494000	**3850** 867000	YMB	**3** 0.12	**357** 14.1	**444** 17.5	0.23	2.93	4.36	2.86	0.096	910	780	**77.4** 170.3
23068	**340** 13.386	**520** 20.472	**133** 5.236	**2640** 593000	**4620** 1040000	YMB	**4** 0.16	**384** 15.1	**481** 18.9	0.23	2.96	4.4	2.89	0.101	830	710	**102.7** 225.9
23072	**360** 14.173	**540** 21.26	**134** 5.276	**2590** 583000	**4600** 1030000	YMB	**4** 0.16	**403** 15.9	**499** 19.7	0.23	2.94	4.38	2.88	0.102	800	680	**108.3** 238.3
23076	**380** 14.961	**560** 22.047	**135** 5.315	**2800** 630000	**5090** 1140000	YMB	**4** 0.16	**422** 16.6	**520** 20.5	0.22	3.08	4.58	3.01	0.105	740	630	**114.2** 251.2
23080	**400** 15.748	**600** 23.622	**148** 5.827	**3310** 744000	**5950** 1340000	YMB	**4** 0.16	**447** 17.6	**555** 21.9	0.23	2.98	4.44	2.92	0.111	690	590	**148.7** 327.1
23084	**420** 16.535	**620** 24.409	**150** 5.906	**3450** 774000	**6360** 1430000	YMB	**4** 0.16	**467** 18.4	**576** 22.7	0.22	3.05	4.54	2.98	0.114	650	560	**156.0** 343.2
23088	**440** 17.323	**650** 25.591	**157** 6.181	**3750** 844000	**6970** 1570000	YMB	**5** 0.2	**489** 19.3	**603** 23.7	0.22	3.04	4.53	2.97	0.117	610	520	**180.0** 396.0
23092	**460** 18.11	**680** 26.772	**163** 6.417	**4060** 913000	**7570** 1700000	YMB	**5** 0.2	**512** 20.1	**631** 24.9	0.22	3.06	4.56	2.99	0.118	580	500	**205.0** 451.0
23096	**480** 18.898	**700** 27.559	**165** 6.496	**4170** 938000	**7980** 1790000	YMB	**5** 0.2	**532** 21	**651** 25.6	0.22	3.14	4.67	3.07	0.124	550	470	**215.0** 473.0
230/500	**500** 19.685	**720** 28.347	**167** 6.575	**4290** 965000	**8160** 1840000	YMB	**5** 0.2	**550** 21.7	**673** 26.5	0.21	3.26	4.85	3.18	0.126	530	460	**222.0** 488.4
230/530	**530** 20.866	**780** 30.709	**185** 7.284	**5150** 1160000	**9720** 2190000	YMB	**5** 0.2	**588** 23.2	**725** 28.6	0.21	3.14	4.68	3.07	0.132	480	420	**302.6** 665.7

(1)Maximum shaft or housing fillet radius that bearing corners will clear.
(2)These factors apply for both inch and metric calculations. See engineering section for instructions on use.
(3)Geometry constant for Lubrication Life Factor a_{31} is found in the Bearing Ratings section of the Engineering Manual (order no. 10424).
(4)See thermal speed ratings in the Engineering Manual (order no. 10424).
NOTE: Where EJ and EM/EMB have different load ratings, the more conservative one was taken to use for both assemblies.
NOTE: Tolerance and shaft diameters are shown in the tables D-2 and D-3 on pages D-5 and D-6 as variances from nominal bearing bore.

231 SERIES (231, 231K SERIES SDAF)

- Bearings are available with a tapered bore for adapter-type mounting. To order, add the suffix K to bearing number (e.g., 23120K).
- Consult your Timken engineer and www.timken.com for up-to-date information about the availability of the bearings you have selected.

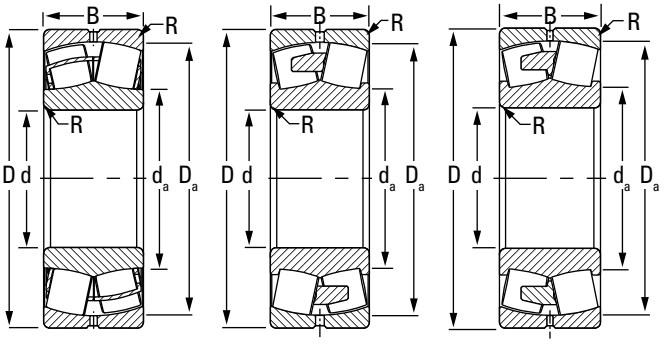

EJ EM/YM EMB/YMB

Bearing Part No.	Bearing Dimensions			Load Ratings		Cage Type	Mounting Data			Equivalent Radial Load Factors[2]				Geometry Factor[3]	Thermal Speed Ratings[4]		Wt.
											Dynamic		Static				
							Fillet[1] (Max.)	Backing Dia.			$\frac{F_a}{F_r} \le e$	$\frac{F_a}{F_r} > e$	In All Cases				
	Bore	O.D.	Width	Dynamic	Static			Shaft	Housing		X = 1	X = 0.67			Oil	Grease	
	d	D	B	C	Co		R	d_a	D_a	e	Y	Y	Y_0	C_g			
	mm in.	**mm** in.	**mm** in.	**kN** lbf.	**kN** lbf.		**mm** in.	**mm** in.	**mm** in.						RPM	RPM	**kg** lbs.
23152	**260** 10.236	**440** 17.323	**144** 5.669	**2440** 549000	**3910** 879000	YMB	**3** 0.12	**302** 11.9	**400** 15.7	0.30	2.23	3.31	2.18	0.086	870	760	**90.0** 198.0
23156	**280** 11.024	**460** 18.11	**146** 5.748	**2530** 570000	**4140** 930000	YMB	**4** 0.16	**320** 12.6	**419** 16.5	0.30	2.26	3.36	2.21	0.09	800	710	**94.5** 207.9
23160	**300** 11.811	**500** 19.685	**160** 6.299	**3070** 691000	**5110** 1150000	YMB	**4** 0.16	**345** 13.6	**453** 17.8	0.30	2.25	3.35	2.20	0.093	710	630	**128.7** 283.1
23164	**320** 12.598	**540** 21.26	**176** 6.929	**3650** 819000	**5930** 1330000	YMB	**4** 0.16	**367** 14.4	**490** 19.3	0.31	2.14	3.19	2.10	0.099	650	580	**167.2** 367.8
23168	**340** 13.386	**580** 22.835	**190** 7.48	**4110** 924000	**6830** 1540000	YMB	**4** 0.16	**397** 15.6	**526** 20.7	0.30	2.22	3.30	2.17	0.103	590	530	**210.3** 462.7
23172	**360** 14.173	**600** 23.622	**192** 7.559	**4250** 956000	**7280** 1640000	YMB	**4** 0.16	**419** 16.5	**546** 21.5	0.29	2.29	3.42	2.24	0.106	560	500	**222.1** 488.6
23176	**380** 14.961	**620** 24.409	**194** 7.638	**4490** 1010000	**7580** 1700000	YMB	**4** 0.16	**431** 17	**566** 22.3	0.30	2.28	3.39	2.23	0.109	530	470	**232.6** 511.7
23180	**400** 15.748	**650** 25.591	**200** 7.874	**4770** 1070000	**8110** 1820000	YMB	**5** 0.2	**454** 17.9	**594** 23.4	0.29	2.32	3.46	2.27	0.11	500	450	**261.6** 575.5
23184	**420** 16.535	**700** 27.559	**224** 8.819	**5720** 1290000	**9640** 2170000	YMB	**5** 0.2	**480** 18.9	**636** 25.1	0.31	2.21	3.20	2.16	0.117	450	410	**350.8** 771.8
23188	**440** 17.323	**720** 28.347	**226** 8.898	**5970** 1340000	**10300** 2310000	YMB	**5** 0.2	**500** 19.7	**657** 25.9	0.30	2.26	3.37	2.21	0.117	430	390	**367.8** 809.2
23192	**460** 18.11	**760** 29.921	**240** 9.449	**6500** 1460000	**11100** 2500000	YMB	**6** 0.24	**524** 20.6	**692** 27.2	0.30	2.24	3.33	2.19	0.123	410	370	**436.9** 961.2
23196	**480** 18.898	**790** 31.102	**248** 9.764	**7110** 1600000	**12400** 2790000	YMB	**6** 0.24	**547** 21.5	**719** 28.3	0.30	2.26	3.36	2.21	0.124	380	340	**490.4** 1078.9

[1]Maximum shaft or housing fillet radius that bearing corners will clear.
[2]These factors apply for both inch and metric calculations. See engineering section for instructions on use.
[3]Geometry constant for Lubrication Life Factor a_{31} is found in the Bearing Ratings section of the Engineering Manual (order no. 10424).
[4]See thermal speed ratings in the Engineering Manual (order no. 10424).
NOTE: Tolerance and shaft diameters are shown in the tables D-2 and D-3 on pages D-5 and D-6 as variances from nominal bearing bore.

232 SERIES (232, 232K SERIES SDAF)

- Bearings are available with a tapered bore for adapter-type mounting. To order, add the suffix K to bearing number (e.g., 23120K).
- Consult your Timken engineer and www.timken.com for up-to-date information about the availability of the bearings you have selected.

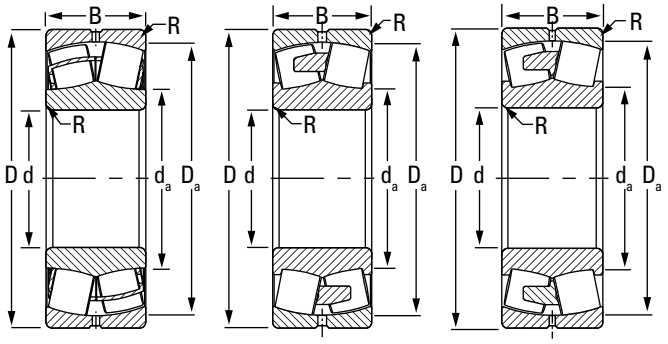

EJ EM/YM EMB/YMB

Bearing Part No.	Bearing Dimensions			Load Ratings		Cage Type	Mounting Data			Equivalent Radial Load Factors(2)				Geometry Factor(3)	Thermal Speed Ratings(4)		Wt.
											Dynamic		Static				
							Fillet(1) (Max.)	Backing Dia.			$\frac{F_a}{F_r} \le e$	$\frac{F_a}{F_r} > e$	In All Cases				
	Bore d	O.D. D	Width B	Dynamic C	Static Co		R	Shaft d_a	Housing D_a	e	X = 1 Y	X = 0.67 Y	Y_0	C_g	Oil	Grease	
	mm in.	**mm** in.	**mm** in.	**kN** lbf.	**kN** lbf.		**mm** in.	**mm** in.	**mm** in.						RPM	RPM	**kg** lbs.
23248	**240** 9.449	**440** 17.323	**160** 6.299	**2780** 625000	**4150** 932000	YMB	**3** 0.12	**281** 11.1	**394** 15.5	0.35	1.92	2.86	1.88	0.082	760	680	**108.1** 237.8
23252	**260** 10.236	**480** 18.898	**174** 6.85	**3210** 721000	**4830** 1090000	YMB	**4** 0.16	**308** 12.1	**430** 16.9	0.34	1.98	2.95	1.94	0.087	680	610	**140.1** 308.2
23256	**280** 11.024	**500** 19.685	**176** 6.929	**3360** 756000	**5240** 1180000	YMB	**4** 0.16	**329** 13	**450** 17.7	0.33	2.07	3.08	2.02	0.092	620	560	**149.7** 329.3
23260	**300** 11.811	**540** 21.26	**192** 7.559	**3840** 864000	**6150** 1380000	YMB	**4** 0.16	**353** 13.9	**482** 19	0.34	2.00	2.98	1.96	0.095	560	510	**194.5** 427.9
23264	**320** 12.598	**580** 22.835	**208** 8.189	**4350** 978000	**7060** 1590000	YMB	**4** 0.16	**379** 14.9	**516** 20.3	0.34	1.98	2.94	1.93	0.101	510	460	**245.1** 539.2
23268	**340** 13.386	**620** 24.409	**224** 8.819	**5160** 1160000	**8200** 1840000	YMB	**5** 0.2	**399** 15.7	**554** 21.8	0.35	1.91	2.84	1.86	0.103	460	420	**301.5** 663.3
23272	**360** 14.173	**650** 25.591	**232** 9.134	**5530** 1240000	**8790** 1980000	YMB	**5** 0.2	**420** 16.5	**583** 22.9	0.35	1.95	2.91	1.91	0.109	430	400	**338.6** 744.9
23276	**380** 14.961	**680** 26.772	**240** 9.449	**5970** 1340000	**9520** 2140000	YMB	**5** 0.2	**442** 17.4	**611** 24.1	0.34	1.98	2.95	1.94	0.11	410	370	**379.4** 834.7
23280	**400** 15.748	**720** 28.347	**256** 10.079	**6720** 1510000	**10800** 2430000	YMB	**5** 0.2	**466** 18.4	**646** 25.4	0.34	1.96	2.93	1.92	0.116	370	340	**457.5** 1006.5
23284	**420** 16.535	**760** 29.921	**272** 10.709	**7360** 1650000	**11800** 2660000	YMB	**6** 0.24	**490** 19.3	**681** 26.8	0.35	1.90	2.83	1.86	0.119	350	320	**525.0** 1155.0
23288	**440** 17.323	**790** 31.102	**280** 11.024	**8090** 1820000	**13200** 2970000	YMB	**6** 0.24	**512** 20.1	**710** 28	0.35	1.95	2.91	1.91	0.123	320	300	**602.0** 1324.4

(1)Maximum shaft or housing fillet radius that bearing corners will clear.
(2)These factors apply for both inch and metric calculations. See engineering section for instructions on use.
(3)Geometry constant for Lubrication Life Factor a_{31} is found in the Bearing Ratings section of the Engineering Manual (order no. 10424).
(4)See thermal speed ratings in the Engineering Manual (order no. 10424).
NOTE: Tolerance and shaft diameters are shown in the tables D-2 and D-3 on pages D-5 and D-6 as variances from nominal bearing bore.

SAF SPHERICAL ROLLER BEARING PILLOW BLOCKS

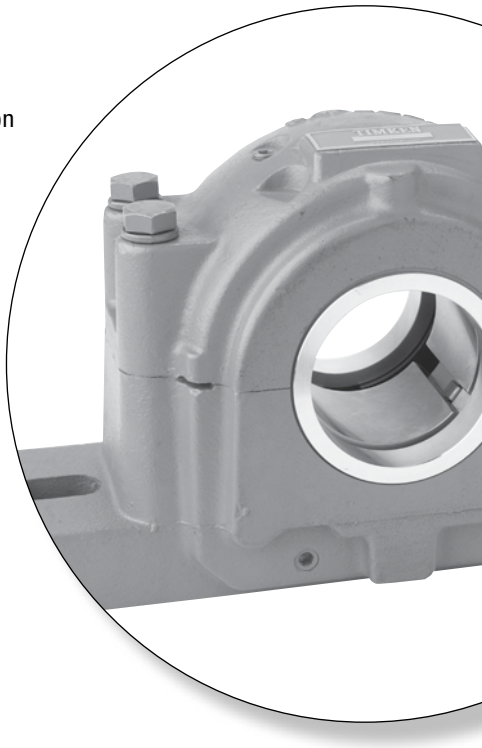

Spherical roller bearing pillow blocks combine rugged cast-iron or steel housings with high-capacity bearings to meet the toughest demands of industry. Each pillow block contains an advanced-design spherical roller bearing with improved geometry and raceway finish for maximized load capacity and service life. Integrated housing and bearing features enhance unit lubrication characteristics. Multiple sealing options protect against contamination.

SAF HOUSED UNIT NOMENCLATURE

SAF two- or four-bolt pillow block, cast iron
SAFD two- or four-bolt pillow block, ductile iron
SAFS two- or four-bolt pillow block, cast steel
SDAF four-bolt heavy-duty-type pillow block, cast iron
SDAFD four-bolt heavy-duty-type pillow block, ductile iron
SDAFS four-bolt heavy-duty pillow block, cast steel
FSAF four-bolt pillow block, cast iron (only when an option)
FSAFD four-bolt pillow block, ductile iron (only when an option)
FSAFS four-bolt pillow block, cast steel (only when an option)

To indicate shaft size and is required for non-standard shaft sizes and pillow block units of 8 7/16 in. shaft size or larger.

SDAF **23152** **K** – **9 1/2** **FXOP**

Number indicates basic spherical bearing series. See product data charts for spherical bearing number.

K indicated on adapter-type mounting arrangement (for 230, 231, 232 Series, SDAF231K and SDAF232K Series)
DV DUSTAC™ seals - both sides
DC DUSTAC seals - one side

Indicate construction:
FXOP fixed open
FXCL fixed closed
FLOP float open
FLCL float closed

Fig. D-14. Pillow blocks.

SAF HOUSED UNIT INTRODUCTION

Timken's capabilities in engineering and manufacturing heavy-duty pillow blocks provide important user benefits. In addition, Timken's worldwide sales organization is staffed with experienced engineers who are available for consultation on any pillow block or bearing application. Our expert engineering assistance also is available for applications involving shaft sizes 1016 mm (40 in.) and larger, such as BOF trunnions, bridge blocks and ball mills. If your design calls for shaft sizes or loads not listed in this catalog, contact your Timken engineer for information about availability of special units.

- **Sizes:** 35-300 mm shafts (1 ⅜ up to 11 ⅞ in.). Special shaft sizes up to 1000 mm (39 ⅜ in.) and beyond.
- **Applications:** Conveyors, ball mills, casters, rolling mills, heavy movable structures.
- **Features:** Split construction for convenient assembly and disassembly. These units include pry tool slots and the exclusive Pry-Lug fulcrum, which simplifies bearing inspection, service and replacement.
- **Benefits:** Caps can be removed easily and quickly without damage to the bearing or housing.

DESIGN AND CONSTRUCTION

Timken supplies pillow blocks equipped with either tapered bore bearings with adapters for mounting on straight shafts or cylindrical bore bearings for assembly on shouldered shafts.

Timken uses a system of doweling caps and bases together at an early stage of manufacturing, so that they remain a single unit during machining. They are not interchangeable as separate parts and become precisely mated components, helping to ensure a precise fit. Timken manufactures pillow blocks in two styles: SAF and SDAF. The larger SDAF block is suggested for extreme-duty applications.

Standard caps and bases are made from high-grade, stress-relieved cast iron. They also are available in cast steel.

All Timken® split pillow blocks are designed for four-bolt mounting. Certain smaller sizes are normally furnished for two-bolt mounting. These assemblies are indicated in the following tables and can be ordered with an optional four-bolt base.

Four cap bolts are used in most Timken pillow blocks in order to equalize the pressure between the cap and the base, helping to prevent lubricant loss.

The illustration below shows all parts of a pillow block assembly that are described throughout this section.

Fig. D-15.

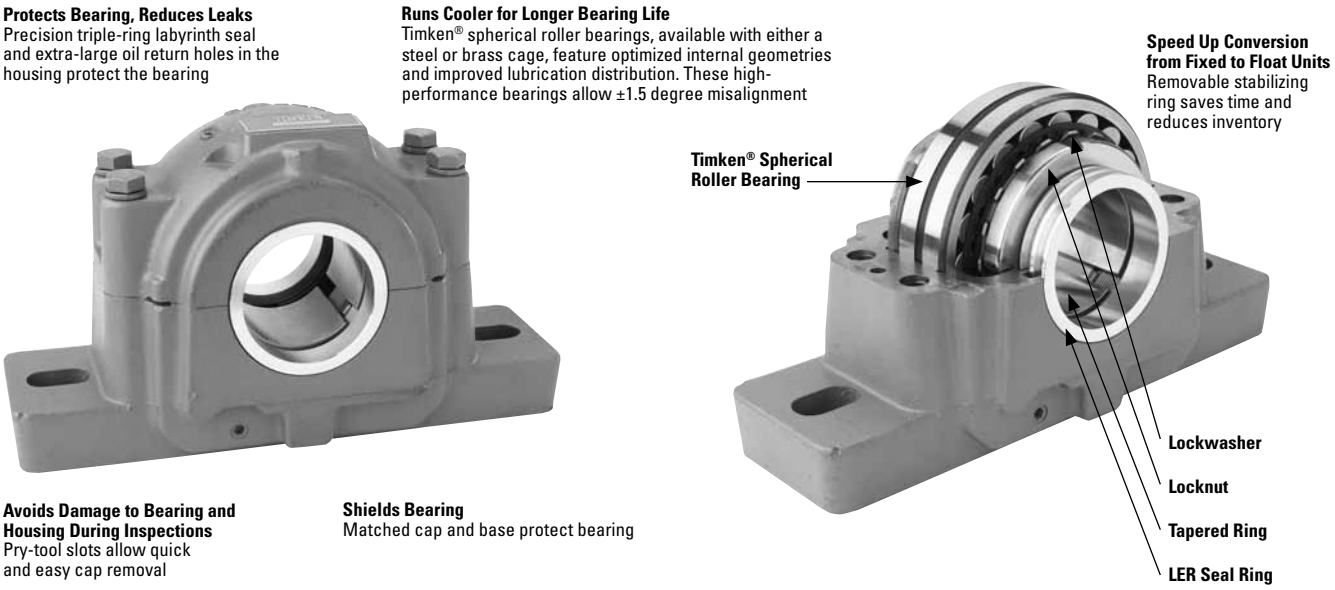

Fig. D-16. SAF housed unit components and features.

MOUNTING

ADAPTER VERSUS STRAIGHT BORE

Usually a spherical roller bearing pillow block assembly is mounted on a straight shaft using a tapered bore bearing and adapter assembly. Standard commercial shafting can be used without additional machining. (Suggested inch shaft diameters are shown in table D-20 on page D-76.) Adapter mount also permits maximum flexibility in the axial positioning of the bearing on the shaft and will accommodate light locational thrust loads. Timken pillow blocks for tapered bore and adapter-mounted bearings are available in series 225, 226, 230, 231K and 232K.

Adapter-mounted spherical roller bearings require the correct removal of diametral clearance from the bearing to prevent relative rotation between inner race and sleeve or shaft. For proper shaft mounting of adapter-type spherical roller bearings, see page D-7.

When application conditions produce heavy thrust loads, or a need exists for exact axial location or a positive shaft interference fit, a direct straight bore mounting may be the best option. This requires a shouldered shaft, machined for proper fit, and a straight bore bearing. Timken pillow block assemblies for straight bore applications are available in series 222, 223, 231 and 232.

Suggested fits for shafts in cylindrical bore spherical roller bearings are shown in the engineering section of this catalog in table D-4 on page D-9. For applications involving heavy shock, vibration, unbalanced rotating loads or other non-standard conditions, consult your Timken engineer.

FIXED AND FLOAT PILLOW BLOCKS

Any style of Timken split pillow blocks can be easily installed at either the float or fixed position on the shaft. For the fixed position, a stabilizing ring is added between the bearing outer-face ring and the housing shoulder to positively locate the shaft and prevent axial movement.

Some applications require centering of the bearing in its housing. To accomplish this, two special-width stabilizing rings can be ordered.

In the float position, the ring is not used, allowing the bearing to move axially (a maximum of $^3/_8$ in.) to compensate for thermal expansion or contraction of the shaft.

Pillow blocks ordered by the numbers in the dimension tables are fixed units. To order float units, specify by adding suffix float or FL to the pillow block number.

CLOSED-END INSTALLATIONS

In some applications, the shaft end is designed to terminate inside the pillow block. For this design, positive fitting end-cap inserts are available to help seal out contaminants and retain lubricant. Timken heavy-duty end plugs include O-rings for positive sealing.

Designers and installers need to make sure the shaft end does not contact the closure. A minimum of $^1/_8$ in. clearance at maximum thermal expansion is suggested between the end of the shaft and the closure. Dimension Y in the tables defines the maximum permissible length of the shaft from the centerline of the pillow block housing. If end closure is desired, specify by adding CL (one end closed) to the pillow block assembly number.

NOTE

Failure to employ proper mounting procedures can cause heating and reduced bearing performance.

LUBRICATION

Timken pillow block housings are designed for grease and oil-bath lubrication. They also can be modified easily to accommodate circulating oil- or oil/air-mist systems. Grease fittings or sight gages are available upon request.

A lubrication groove and oil holes are provided in the bearing outer ring. This feature, designated by adding suffix W33 to the bearing number, should be specified whenever re-ordering bearings for pillow blocks. In most cases, the fresh lubricant is fed directly to the center of the bearing between the rows of rollers and distributed to the rest of the bearing. This helps ensure the used lubricant is purged from the bearing.

SEALS

Precision triple-ring labyrinth seals are supplied with all Timken split pillow blocks to help exclude foreign matter and retain lubricants. The pillow block base includes extra-large oil return holes at the bottom of the seal grooves to help prevent leakage past the seals.

For extremely contaminated or abrasive environments, the DUSTAC™ seal offers protection against concentrations of dust or abrasive material that a labyrinth seal cannot keep out. See page D-80 for further information on DUSTAC.

LOAD RATINGS AND LIFE

Load ratings for the spherical roller bearings that are used in pillow blocks are found in the dimension tables on pages D-37 through D-43. Life calculation formulas are found in the Engineering Manual (order no. 10424) on page 48 available on www.timken.com.

In addition to individual bearing selection, the ability of the pillow block to carry the operating load should be considered.

It should be noted that the load rating figures supplied in this catalog are applicable only when the load direction is generally toward the base of the pillow block. If the pillow block must be mounted so the load can be applied in any other direction, consult your Timken engineer.

INCH TAPERED BORE MOUNTING SAF225 AND SAF226 SERIES

- The basic number for ordering complete pillow block assemblies is listed in the table below.
- Each assembly includes the housing cap and base, cap bolts, bearing, bearing adapter, locknut and lockwasher, stabilizing ring and triple-ring seals.
- If only the pillow block housing is desired, use the numbers listed in column headed Housing Only. These units include cap, base, cap bolts, triple-ring seals and stabilizing ring.
- Assemblies and pillow blocks described on this page constitute a fixed unit. To order float units, specify the part number plus the suffix float or FL.
- Assemblies shown are furnished in cast iron. If cast steel is desired, add the letter S to the alpha prefix (e.g., SAFS 22515).
- Four-bolt bases are standard on all assemblies unless as noted.
- If one end closed assembly is required, specify CL in assembly number when ordering.

Pillow Block Assembly[1]	Shaft Dia. S-1[2]	A	B	C	D	E		F	H
						Max.	Min.		
	in.	in.	in.	in.	in.	in.	in.	in.	in.
SERIES SAF225									
SAF22509	1 3/8 **1 7/16** 1 1/2	**2 1/4**	**8 1/4**	**2 3/8**	**13/16**	**7**	**6 1/4**	–	**4 3/8**
SAF22510	1 5/8 **1 11/16** 1 3/4	**2 1/2**	**8 1/4**	**2 3/8**	**15/16**	**7**	**6 1/2**	–	**4 3/4**
SAF22511	1 7/8 **1 15/16** 2	**2 3/4**	**9 5/8**	**2 3/4**	**15/16**	**7 7/8**	**7 3/8**	–	**5 11/32**
SAF22513	2 1/8 **2 3/16** 2 1/4	**3**	**11**	**3 1/8**	**1**	**9 1/2**	**8 1/8**	–	**5 25/32**
SAF22515	2 3/8 **2 7/16** 2 1/2	**3 1/4**	**11 1/4**	**3 1/8**	**1 1/8**	**9 5/8**	**8 5/8**	–	**6 3/8**
FSAF22515	2 3/8 **2 7/16** 2 1/2	**3 1/4**	**11 1/4**	**3 1/8**	**1 1/8**	**9 5/8**	**8 5/8**	**1 7/8**	**6 3/8**
SAF22516	2 5/8 **2 11/16** 2 3/4	**3 1/2**	**13**	**3 1/2**	**1 3/16**	**11**	**9 5/8**	–	**6 7/8**
FSAF22516	2 5/8 **2 11/16** 2 3/4	**3 1/2**	**13**	**3 1/2**	**1 3/16**	**11**	**9 5/8**	**2 1/8**	**6 7/8**
SAF22517	2 13/16 2 7/8 **2 15/16** 3	**3 3/4**	**13**	**3 1/2**	**1 1/4**	**11**	**9 7/8**	–	**7 1/4**
FSAF22517	2 13/16 2 7/8 **2 15/16** 3	**3 3/4**	**13**	**3 1/2**	**1 1/4**	**11**	**9 7/8**	**2 1/8**	**7 1/4**

[1]Bold shaft sizes are standard. When ordering non-standard pillow block assemblies specify the shaft size.
[2]See page D-76, table D-20 for suggested shaft diameter S-1 tolerances.
[3]Includes sleeve, locknut and lockwasher. Add shaft size to order.
[4]Housing Only includes cap, base, cap bolts, triple-ring seals and stabilizing ring as required. When ordering non-standard housing only, specify the shaft size.
[5]Stabilizing ring used for fixed (FX) block; do not use for float (FL) mounting.
NOTE: Speed ratings are found in the dimension tables on pages D-37 through D-43.

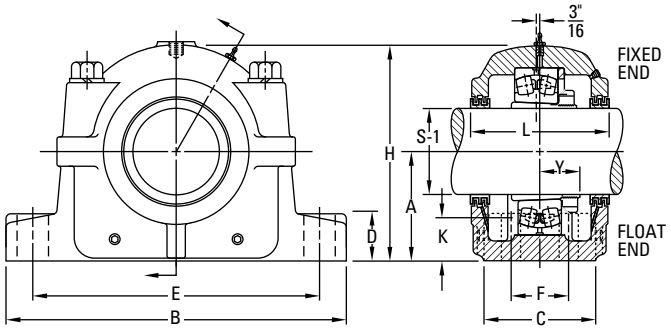

K Oil Level	L	Y	Base Bolts Required No.	Base Bolts Required Size	Bearing No.	Adapter Assembly No.[3]	Housing Only[4]	Stabilizing Ring 1 Req'd[5]	Triple Seal 2 Req'd	Assembly Wt.
in.	in.	in.		in.						lbs.
31/32	3 5/8	1 3/32	2	1/2	22209K	SNW-09 x 1 3/8 **SNW-09 x 1 7/16** SNW-09 x 1 1/2	SAF509	SR-9-9	LER 16 **LER 17** LER 18	12
1 3/32	3 5/8	1 3/32	2	1/2	22210K	SNW-10 x 1 5/8 **SNW-10 x 1 11/16** SNW-10 x 1 3/4	SAF510	SR-10-0	LER 19 **LER 20** LER 21	13
1 3/16	3 3/4	1 3/16	2	1/2	22211K	SNW-11 x 1 7/8 **SNW-11 x 1 15/16** SNW-11 x 2	SAF 511	SR-11-0	LER 23 **LER 24** LER 25	16
1 1/8	4 5/16	1 7/32	2	1/2	22213K	SNW-13 x 2 1/8 **SNW-13 x 2 3/16** SNW-13 x 2 1/4	SAF 513	SR-13-0	LER 28 **LER 29** LER 30	19.5
1 1/4	4 3/4	1 9/32	2	5/8	22215K	SNW-15 x 2 3/8 **SNW-15 x 2 7/16** SNW-15 x 2 1/2	SAF515	SR-15-0	LER 35 **LER 37** LER 39	30
1 1/4	4 3/4	1 9/32	4	1/2	22215K	SNW-15 x 2 3/8 **SNW-15 x 2 7/16** SNW-15 x 2 1/2	FSAF515	SR-15-0	LER 35 **LER 37** LER 39	30
1 11/32	4 7/8	1 21/64	2	3/4	22216K	SNW-16 x 2 5/8 **SNW-16 x 2 11/16** SNW-16 x 2 3/4	SAF516	SR-16-13	LER 41 **LER 44** LER 45	37
1 11/32	4 7/8	1 21/64	4	5/8	22216K	SNW-16 x 2 5/8 **SNW-16 x 2 11/16** SNW-16 x 2 3/4	FSAF516	SR-16-13	LER 41 **LER 44** LER 45	37
1 7/16	4 15/16	1 27/64	2	3/4	22217K	SNW-17 x 2 13/16 SNW-17 x 2 7/8 **SNW-17 x 2 15/16** SNW-17 x 3	SAF517	SR-17-14	LER 51 LER 52 **LER 53** LER 54	40
1 7/16	4 15/16	1 27/64	4	5/8	22217K	SNW-17 x 2 13/16 SNW-17 x 2 7/8 **SNW-17 x 2 15/16** SNW-17 x 3	FSAF517	SR-17-14	LER 51 LER 52 **LER 53** LER 54	40

(1)Bold shaft sizes are standard. When ordering non-standard pillow block assemblies specify the shaft size.
(2)See page D-76, table D-20 for suggested shaft diameter S-1 tolerances.
(3)Includes sleeve, locknut and lockwasher. Add shaft size to order.
(4)Housing Only includes cap, base, cap bolts, triple-ring seals and stabilizing ring as required. When ordering non-standard housing only, specify the shaft size.
(5)Stabilizing ring used for fixed (FX) block; do not use for float (FL) mounting.
NOTE: Speed ratings are found in the dimension tables on pages D-37 through D-43.

Continued on next page.

INCH TAPERED BORE MOUNTING SAF225 AND SAF226 SERIES – *continued*

- The basic number for ordering complete pillow block assemblies is listed in the table below.
- Each assembly includes the housing cap and base, cap bolts, bearing, bearing adapter, locknut and lockwasher, stabilizing ring and triple-ring seals.
- If only the pillow block housing is desired, use the numbers listed in column headed Housing Only. These units include cap, base, cap bolts, triple-ring seals and stabilizing ring.
- Assemblies and pillow blocks described on this page constitute a fixed unit. To order float units, specify the part number plus the suffix float or FL.
- Assemblies shown are furnished in cast iron. If cast steel is desired, add the letter S to the alpha prefix (e.g., SAFS 22515).
- Four-bolt bases are standard on all assemblies unless as noted.
- If one end closed assembly is required, specify CL in assembly number when ordering.

Continued from previous page.

Pillow Block Assembly[1]	Shaft Dia. S-1[2]	A	B	C	D	E		F	H
						Max.	Min.		
	in.	in.	in.	in.	in.	in.	in.	in.	in.
	3 1/16								
	3 1/8								
SAF22518	**3 3/16**	**4**	**13 3/4**	**3 7/8**	**1 1/2**	**11 5/8**	**10 3/8**	–	**7 3/4**
	3 1/4								
	3 1/16								
	3 1/8								
FSAF22518	**3 3/16**	**4**	**13 3/4**	**3 7/8**	**1 1/2**	**11 5/8**	**10 3/8**	**2 1/8**	**7 3/4**
	3 1/4								
	3 3/8								
SAF22520	**3 7/16**	**4 1/2**	**15 1/4**	**4 3/8**	**1 3/4**	**13 1/8**	**11 5/8**	–	**8 11/16**
	3 1/2								
	3 3/8								
FSAF22520	**3 7/16**	**4 1/2**	**15 1/4**	**4 3/8**	**1 3/4**	**13 1/8**	**11 5/8**	**2 3/8**	**8 11/16**
	3 1/2								
	3 13/16								
	3 7/8								
SAF22522	**3 15/16**	**4 15/16**	**16 1/2**	**4 3/4**	**2**	**14 1/2**	**12 5/8**	**2 3/4**	**9 9/16**
	4								
	4 1/16								
	4 1/8								
SAF22524	**4 3/16**	**5 1/4**	**16 1/2**	**4 3/4**	**2 1/8**	**14 1/2**	**13 1/4**	**2 3/4**	**10 1/4**
	4 1/4								
	4 5/16								
	4 3/8								
SAF22526	**4 7/16**	**6**	**18 3/8**	**5 1/8**	**2 3/8**	**16**	**14 5/8**	**3 1/4**	**11 9/16**
	4 1/2								
	4 13/16								
	4 7/8								
SAF22528	**4 15/16**	**6**	**20 1/8**	**5 7/8**	**2 3/8**	**17 1/8**	**16**	**3 3/8**	**11 3/4**
	5								
	5 1/8								
SAF22530	**5 3/16**	**6 5/16**	**21 1/4**	**6 1/4**	**2 1/2**	**18 1/4**	**17**	**3 3/4**	**12 1/2**
	5 1/4								

[1]Bold shaft sizes are standard. When ordering non-standard pillow block assemblies specify the shaft size.
[2]See page D-76, table D-20 for suggested shaft diameter S-1 tolerances.
[3]Includes sleeve, locknut and lockwasher. Add shaft size to order.
[4]Housing Only includes cap, base, cap bolts, triple-ring seals and stabilizing ring as required. When ordering non-standard housing only, specify the shaft size.
[5]Stabilizing ring used for fixed (FX) block; do not use for float (FL) mounting.
NOTE: Speed ratings are found in the dimension tables on pages D-37 through D-43.

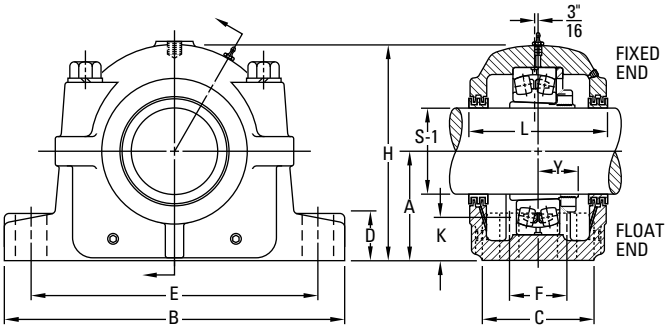

K Oil Level	L	Y	Base Bolts Required No.	Base Bolts Required Size	Bearing No.	Adapter Assembly No.(3)	Housing Only(4)	Stabilizing Ring 1 Req'd(5)	Triple Seal 2 Req'd	Assembly Wt.
in.	in.	in.		in.						lbs.
						SNW-18 x 3 1/16			LER 67	
						SNW-18 x 3 1/8			LER 68	
1 17/32	**6 1/4**	**1 37/64**	**2**	**3/4**	**22218K**	**SNW-18 x 3 3/16**	**SAF518**	**SR-18-15**	**LER 69**	**49**
						SNW-18 x 3 1/4			LER 70	
						SNW-18 x 3 1/16			LER 67	
						SNW-18 x 3 1/8			LER 68	
1 17/32	**6 1/4**	**1 37/64**	**4**	**5/8**	**22218K**	**SNW-18 x 3 3/16**	**FSAF518**	**SR-18-15**	**LER 69**	**49**
						SNW-18 x 3 1/4			LER 70	
						SNW-20 x 3 3/8			LER 101	
1 3/4	**6**	**1 49/64**	**2**	**7/8**	**22220K**	**SNW-20 x 3 7/16**	**SAF520**	**SR-20-17**	**LER 102**	**65**
						SNW-20 x 3 1/2			LER 103	
						SNW-20 x 3 3/8			LER 101	
1 3/4	**6**	**1 49/64**	**4**	**3/4**	**22220K**	**SNW-20 x 3 7/16**	**FSAF520**	**SR-20-17**	**LER 102**	**65**
						SNW-20 x 3 1/2			LER 103	
						SNW-22 x 3 13/16			LER 107	
						SNW-22 x 3 7/8			LER 108	
1 7/8	**6 3/8**	**1 61/64**	**4**	**3/4**	**22222K**	**SNW-22 x 3 15/16**	**SAF522**	**SR-22-19**	**LER 109**	**81**
						SNW-22 x 4			LER 110	
						SNW-24 x 4 1/16			LER 111	
						SNW-24 x 4 1/8			LER 112	
1 15/16	**7 3/8**	**2 3/32**	**4**	**3/4**	**22224K**	**SNW-24 x 4 3/16**	**SAF524**	**SR-24-20**	**LER 113**	**94**
						SNW-24 x 4 1/4			LER 114	
						SNW-26 x 4 5/16			LER 115	
						SNW-26 x 4 3/8			LER 115	
2 7/16	**8**	**2 17/64**	**4**	**7/8**	**22226K**	**SNW-26 x 4 7/16**	**SAF526**	**SR-26-0**	**LER 117**	**137**
						SNW-26 x 4 1/2			LER 118	
						SNW-28 x 4 13/16			LER 120	
						SNW-28 x 4 7/8			LER 121	
2 1/8	**7 3/4**	**2 13/32**	**4**	**1**	**22228K**	**SNW-28 x 4 15/16**	**SAF528**	**SR-28-0**	**LER 122**	**159**
						SNW-28 x 5			LER 123	
						SNW-30 x 5 1/8			LER 124	
2 3/16	**8 3/8**	**2 37/64**	**4**	**1**	**22230K**	**SNW-30 x 5 3/16**	**SAF530**	**SR-30-0**	**LER 125**	**189**
						SNW-30 x 5 1/4			LER 126	

(1)Bold shaft sizes are standard. When ordering non-standard pillow block assemblies specify the shaft size.
(2)See page D-76, table D-20 for suggested shaft diameter S-1 tolerances.
(3)Includes sleeve, locknut and lockwasher. Add shaft size to order.
(4)Housing Only includes cap, base, cap bolts, triple-ring seals and stabilizing ring as required. When ordering non-standard housing only, specify the shaft size.
(5)Stabilizing ring used for fixed (FX) block; do not use for float (FL) mounting.
NOTE: Speed ratings are found in the dimension tables on pages D-37 through D-43.

Continued on next page.

INCH TAPERED BORE MOUNTING SAF225 AND SAF226 SERIES – *continued*

- The basic number for ordering complete pillow block assemblies is listed in the table below.
- Each assembly includes the housing cap and base, cap bolts, bearing, bearing adapter, locknut and lockwasher, stabilizing ring and triple-ring seals.
- If only the pillow block housing is desired, use the numbers listed in column headed Housing Only. These units include cap, base, cap bolts, triple-ring seals and stabilizing ring.
- Assemblies and pillow blocks described on this page constitute a fixed unit. To order float units, specify the part number plus the suffix float or FL.
- Assemblies shown are furnished in cast iron. If cast steel is desired, add the letter S to the alpha prefix (e.g., SAFS 22515).
- Four-bolt bases are standard on all assemblies unless as noted.
- If one end closed assembly is required, specify CL in assembly number when ordering.

Continued from previous page.

Pillow Block Assembly[1]	Shaft Dia. S-1[2]	A	B	C	D	E		F	H
						Max.	Min.		
	in.	in.	in.	in.	in.	in.	in.	in.	in.
SAF22532	5 3/8 **5 7/16** 5 1/2	**6 11/16**	**22**	**6 1/4**	**2 5/8**	**19 1/4**	**17 3/8**	**3 3/4**	**13 5/16**
SAF22534	5 13/16 5 7/8 **5 15/16** 6	**7 1/16**	**24 3/4**	**6 3/4**	**2 3/4**	**21 5/8**	**19 3/8**	**4 1/4**	**14 9/16**
SAF22536	6 5/16 6 3/8 **6 7/16** 6 1/2	**7 1/2**	**26 3/4**	**7 1/8**	**3**	**23 5/8**	**20 7/8**	**4 5/8**	**15 1/2**
SAF22538	6 13/16 6 7/8 **6 15/16** 7	**7 7/8**	**28**	**7 1/2**	**3 1/8**	**24 3/8**	**21 5/8**	**4 1/2**	**15 11/16**
SAF22540	7 1/8 **7 3/16** 7 1/4	**8 1/4**	**29 1/2**	**8**	**3 3/8**	**25**	**22 1/2**	**5**	**17 3/16**
SAF22544	7 13/16 7 7/8 **7 15/16** 8	**9 1/2**	**32 3/4**	**8 3/4**	**3 3/4**	**27 7/8**	**24 3/4**	**5 1/4**	**19 5/8**
SERIES SAF226									
SAF22615	2 3/8 **2 7/16** 2 1/2	**4**	**13 3/4**	**3 7/8**	**1 5/8**	**11 5/8**	**10 3/8**	**2 1/8**	**7 9/16**
SAF22616	2 5/8 **2 11/16** 2 3/4	**4 1/4**	**14 1/4**	**3 7/8**	**1 3/4**	**12 5/8**	**10 5/8**	**2 1/8**	**8 1/4**

[1]Bold shaft sizes are standard. When ordering non-standard pillow block assemblies specify the shaft size.
[2]See page D-76, table D-20 for suggested shaft diameter S-1 tolerances.
[3]Includes sleeve, locknut and lockwasher. Add shaft size to order.
[4]Housing Only includes cap, base, cap bolts, triple-ring seals and stabilizing ring as required. When ordering non-standard housing only, specify the shaft size.
[5]Stabilizing ring used for fixed (FX) block; do not use for float (FL) mounting.
NOTE: Speed ratings are found in the dimension tables on pages D-37 through D-43.

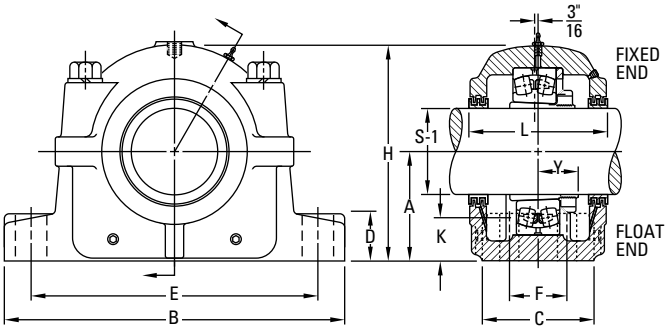

K Oil Level	L	Y	Base Bolts Required No.	Base Bolts Required Size	Bearing No.	Adapter Assembly No.[3]	Housing Only[4]	Stabilizing Ring 1 Req'd[5]	Triple Seal 2 Req'd	Assembly Wt.
in.	in.	in.		in.						lbs.
						SNW-32 x 5 3/8			LER 129	
2 3/16	**8 3/4**	**2 49/64**	**4**	**1**	**22232K**	**SNW-32 x 5 7/16**	**SAF532**	**SR-32-0**	**LER 130**	**225**
						SNW-32 x 5 1/2			LER 131	
						SNW-34 x 5 13/16			LER 138	
						SNW-34 x 5 7/8			LER 139	
2 5/16	**9 3/8**	**2 59/64**	**4**	**1**	**22234K**	**SNW-34 x 5 15/16**	**SAF534**	**SR-34-0**	**LER 140**	**300**
						SNW-34 x 6			LER 141	
						SNW-36 x 6 5/16			LER 146	
						SNW-36 x 6 3/8			LER 147	
2 9/16	**9 11/16**	**2 61/64**	**4**	**1**	**22236K**	**SNW-36 x 6 7/16**	**SAF536**	**SR-36-30**	**LER 148**	**330**
						SNW-36 x 6 1/2			LER 149	
						SNW-38 x 6 13/16			LER 153	
						SNW-38 x 6 7/8			LER 154	
2 5/8	**10 3/4**	**3 7/64**	**4**	**1 1/4**	**22238K**	**SNW-38 x 6 15/16**	**SAF538**	**SR-38-32**	**LER 155**	**375**
						SNW-38 x 7			LER 156	
						SNW-40 x 7 1/8			LER 158	
2 11/16	**10 13/16**	**3 9/32**	**4**	**1 1/4**	**22240K**	**SNW-40 x 7 3/16**	**SAF540**	**SR-40-34**	**LER 159**	**445**
						SNW-40 x 7 1/4			LER 160	
						SNW-44 x 7 13/16			LER 165	
						SNW-44 x 7 7/8			LER 166	
3 3/8	**11 1/2**	**3 17/32**	**4**	**1 1/2**	**22244K**	**SNW-44 x 7 15/16**	**SAF544**	**SR-44-38**	**LER 167**	**615**
						SNW-44 x 8			LER 168	
						SNW-115 x 2 3/8			LER 36	
1 19/32	**5 7/8**	**1 7/8**	**2, 4**	**3/4, 5/8**	**22315K**	**SNW-115 x 2 7/16**	**SAF 615**	**SR-18-15**	**LER 37**	**52**
						SNW-115 x 2 1/2			LER 38	
						SNW-116 x 2 5/8			LER 43	
1 11/16	**6 1/2**	**1 15/16**	**2, 4**	**3/4, 5/8**	**22316K**	**SNW-116 x 2 11/16**	**SAF 616**	**SR-19-16**	**LER 44**	**71**
						SNW-116 x 2 3/4			LER 45	

[1]Bold shaft sizes are standard. When ordering non-standard pillow block assemblies specify the shaft size.
[2]See page D-76, table D-20 for suggested shaft diameter S-1 tolerances.
[3]Includes sleeve, locknut and lockwasher. Add shaft size to order.
[4]Housing Only includes cap, base, cap bolts, triple-ring seals and stabilizing ring as required. When ordering non-standard housing only, specify the shaft size.
[5]Stabilizing ring used for fixed (FX) block; do not use for float (FL) mounting.
NOTE: Speed ratings are found in the dimension tables on pages D-37 through D-43.

Continued on next page.

INCH TAPERED BORE MOUNTING SAF225 AND SAF226 SERIES – *continued*

- The basic number for ordering complete pillow block assemblies is listed in the table below.
- Each assembly includes the housing cap and base, cap bolts, bearing, bearing adapter, locknut and lockwasher, stabilizing ring and triple-ring seals.
- If only the pillow block housing is desired, use the numbers listed in column headed Housing Only. These units include cap, base, cap bolts, triple-ring seals and stabilizing ring.
- Assemblies and pillow blocks described on this page constitute a fixed unit. To order float units, specify the part number plus the suffix float or FL.
- Assemblies shown are furnished in cast iron. If cast steel is desired, add the letter S to the alpha prefix (e.g., SAFS 22515).
- Four-bolt bases are standard on all assemblies unless as noted.
- If one end closed assembly is required, specify CL in assembly number when ordering.

Continued from previous page.

Pillow Block Assembly[1]	Shaft Dia. S-1[2]	A	B	C	D	E		F	H
						Max.	Min.		
	in.	in.	in.	in.	in.	in.	in.	in.	in.
	2 13/16								
	2 7/8								
SAF22617	**2 15/16**	**4 1/2**	**15 1/4**	**4 3/8**	**1 3/4**	**13 1/8**	**11 5/8**	–	**8 11/16**
	3								
	2 13/16								
	2 7/8								
FSAF22617	**2 15/16**	**4 1/2**	**15 1/4**	**4 3/8**	**1 3/4**	**13 1/8**	**11 5/8**	**2 3/8**	**8 11/16**
	3								
	3 1/16								
	3 1/8								
SAF22618	**3 3/16**	**4 3/4**	**15 1/2**	**4 3/8**	**2**	**13 1/2**	**12**	**2 1/4**	**9 3/16**
	3 1/4								
	3 5/16								
	3 3/8								
SAF22620	**3 7/16**	**5 1/4**	**16 1/2**	**4 3/4**	**2 1/8**	**14 1/2**	**13 1/4**	**2 3/4**	**10 1/4**
	3 1/2								
	3 13/16								
	3 7/8								
SAF22622	**3 15/16**	**6**	**18 3/8**	**5 1/8**	**2 3/8**	**16**	**14 5/8**	**3 1/4**	**11 9/16**
	4								
	4 1/16								
	4 1/8								
SAF22624	**4 3/16**	**6 5/16**	**21 1/4**	**6 1/4**	**2 1/2**	**18 1/4**	**17**	**3 3/4**	**12 1/2**
	4 1/4								
	4 5/16								
	4 3/8								
SAF22626	**4 7/16**	**6 11/16**	**22**	**6 1/4**	**2 5/8**	**19 1/4**	**17 3/8**	**3 3/4**	**13 5/16**
	4 1/2								
	4 13/16								
	4 7/8								
SAF22628	**4 15/16**	**7 1/16**	**24 3/4**	**6 3/4**	**2 3/4**	**21 5/8**	**19 3/8**	**4 1/4**	**14 9/16**
	5								

[1]Bold shaft sizes are standard. When ordering non-standard pillow block assemblies specify the shaft size.
[2]See page D-76, table D-20 for suggested shaft diameter S-1 tolerances.
[3]Includes sleeve, locknut and lockwasher. Add shaft size to order.
[4]Housing Only includes cap, base, cap bolts, triple-ring seals and stabilizing ring as required. When ordering non-standard housing only, specify the shaft size.
[5]Stabilizing ring used for fixed (FX) block; do not use for float (FL) mounting.
NOTE: Speed ratings are found in the dimension tables on pages D-37 through D-43.

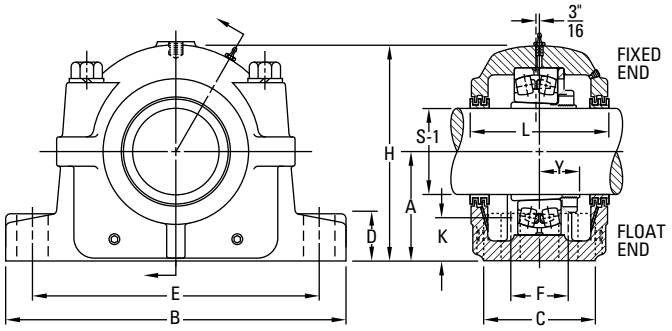

K Oil Level	L	Y	Base Bolts Required No.	Base Bolts Required Size	Bearing No.	Adapter Assembly No.[3]	Housing Only[4]	Stabilizing Ring 1 Req'd[5]	Triple Seal 2 Req'd	Assembly Wt.
in.	in.	in.		in.						lbs.
						SNW-117 x 2 13/16			LER 182	
						SNW-117 x 2 7/8			LER 183	
1 13/16	**6 5/8**	**1 57/64**	**2**	**7/8**	**22317K**	**SNW-117 x 2 15/16**	**SAF617**	**SR-20-17**	**LER 184**	**81**
						SNW-117 x 3			LER 185	
						SNW-117 x 2 13/16			LER 182	
						SNW-117 x 2 7/8			LER 183	
1 13/16	**6 5/8**	**1 57/64**	**4**	**3/4**	**22317K**	**SNW-117 x 2 15/16**	**FSAF617**	**SR-20-17**	**LER 184**	**81**
						SNW-117 x 3			LER 185	
						SNW-118 x 3 1/16			LER 186	
						SNW-118 x 3 1/8			LER 187	
2	**7**	**2 3/64**	**4**	**3/4**	**22318K**	**SNW-118 x 3 3/16**	**SAF618**	**SR-21-18**	**LER 188**	**90**
						SNW-118 x 3 1/4			LER 189	
						SNW-120 x 3 5/16			LER 100	
						SNW-120 x 3 3/8			LER 101	
2 1/8	**7 3/8**	**2 19/64**	**4**	**3/4**	**22320K**	**SNW-120 x 3 7/16**	**SAF620**	**SR-24-20**	**LER 102**	**113**
						SNW-120 x 3 1/2			LER 103	
						SNW-122 x 3 13/16			LER 107	
						SNW-122 x 3 7/8			LER 108	
2 1/2	**8**	**2 31/64**	**4**	**7/8**	**22322K**	**SNW-122 x 3 15/16**	**SAF622**	**SR-0-22**	**LER 109**	**151**
						SNW-122 x 4			LER 110	
						SNW-124 x 4 1/16			LER 111	
						SNW-124 x 4 1/8			LER 112	
2 9/16	**8 3/8**	**2 41/64**	**4**	**1**	**22324K**	**SNW-124 x 4 3/16**	**SAF624**	**SR-0-24**	**LER 113**	**201**
						SNW-124 x 4 1/4			LER 114	
						SNW-126 x 4 5/16			LER 115	
						SNW-126 x 4 3/8			LER 116	
2 5/8	**8 3/4**	**2 27/32**	**4**	**1**	**22326K**	**SNW-126 x 4 7/16**	**SAF626**	**SR-0-26**	**LER 117**	**245**
						SNW-126 x 4 1/2			LER 118	
						SNW-126 x 4 9/16			LER 120	
						SNW-128 x 4 13/16			LER 121	
2 11/16	**9 3/8**	**3 5/64**	**4**	**1**	**22328K**	**SNW-128 x 4 7/8**	**SAF628**	**SR-0-28**	**LER 122**	**310**
						SNW-128 x 4 15/16			LER 123	

(1)Bold shaft sizes are standard. When ordering non-standard pillow block assemblies specify the shaft size.
(2)See page D-76, table D-20 for suggested shaft diameter S-1 tolerances.
(3)Includes sleeve, locknut and lockwasher. Add shaft size to order.
(4)Housing Only includes cap, base, cap bolts, triple-ring seals and stabilizing ring as required. When ordering non-standard housing only, specify the shaft size.
(5)Stabilizing ring used for fixed (FX) block; do not use for float (FL) mounting.
NOTE: Speed ratings are found in the dimension tables on pages D-37 through D-43.

Continued on next page.

INCH TAPERED BORE MOUNTING SAF225 AND SAF226 SERIES – *continued*

- The basic number for ordering complete pillow block assemblies is listed in the table below.
- Each assembly includes the housing cap and base, cap bolts, bearing, bearing adapter, locknut and lockwasher, stabilizing ring and triple-ring seals.
- If only the pillow block housing is desired, use the numbers listed in column headed Housing Only. These units include cap, base, cap bolts, triple-ring seals and stabilizing ring.
- Assemblies and pillow blocks described on this page constitute a fixed unit. To order float units, specify the part number plus the suffix float or FL.
- Assemblies shown are furnished in cast iron. If cast steel is desired, add the letter S to the alpha prefix (e.g., SAFS 22515).
- Four-bolt bases are standard on all assemblies unless as noted.
- If one end closed assembly is required, specify CL in assembly number when ordering.

Continued from previous page.

Pillow Block Assembly[1]	Shaft Dia. S-1[2]	A	B	C	D	E		F	H
						Max.	Min.		
	in.	in.	in.	in.	in.	in.	in.	in.	in.
SAF22630	5 1/8 **5 3/16** 5 1/4	**7 1/2**	**26 3/4**	**7 1/8**	**3**	**23 5/8**	**20 7/8**	**4 5/8**	**15 1/2**
SAF22632	5 3/8 **5 7/16** 5 1/2	**7 7/8**	**28**	**7 1/2**	**3 1/8**	**24 3/8**	**21 5/8**	**4 1/2**	**15 11/16**
SAF22634	5 13/16 5 7/8 **5 15/16** 6	**8 1/4**	**29 1/2**	**8**	**3 3/8**	**25**	**22 1/2**	**5**	**17 3/16**
SAF22636	**6 7/16**	**8 7/8**	**31 1/4**	**8 1/4**	**3 1/2**	**26 5/8**	**24**	**5 1/4**	**18 1/2**
SAF22638	6 13/16 6 7/8 **6 15/16** 7	**9 1/2**	**32 3/4**	**8 3/4**	**3 3/4**	**27 7/8**	**24 3/4**	**5 1/4**	**19 5/8**
SAF22640	7 1/8 **7 3/16** 7 1/4	**9 7/8**	**34 1/4**	**9**	**4**	**29 1/2**	**26 1/4**	**5 1/2**	**20 3/16**

[1]Bold shaft sizes are standard. When ordering non standard pillow block assemblies specify the shaft size.
[2]See page D-76, table D-20 for suggested shaft diameter S-1 tolerances.
[3]Includes sleeve, locknut and lockwasher. Add shaft size to order.
[4]Housing Only includes cap, base, cap bolts, triple-ring seals and stabilizing ring as required. When ordering non-standard housing only, specify the shaft size.
[5]Stabiling ring used for fixed (FX) block; do not use for float (FL) mounting.
NOTE: Speed ratings are found in the dimension tables on pages D-37 through D-43.

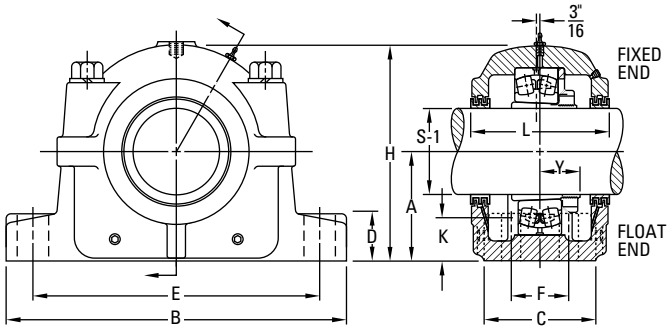

K Oil Level	L	Y	Base Bolts Required No.	Base Bolts Required Size	Bearing No.	Adapter Assembly No.[3]	Housing Only[4]	Stabilizing Ring 1 Req'd[5]	Triple Seal 2 Req'd	Assembly Wt.
in.	in.	in.		in.						lbs.
2 7/8	**9 11/16**	**3 17/64**	**4**	**1**	**22330K**	SNW-130 x 5 1/8 **SNW-130 x 5 3/16** SNW-130 x 5 1/4	**SAF630**	**SR-36-30**	LER 124 **LER 125** LER 126	**350**
2 15/16	**10 3/4**	**3 7/16**	**4**	**1 1/4**	**22332K**	SNW-132 x 5 3/8 **SNW-132 x 5 7/16** SNW-132 x 5 1/2	**SAF632**	**SR-38-32**	LER 129 **LER 130** LER 131	**420**
3 1/16	**10 13/16**	**3 19/32**	**4**	**1 1/4**	**22334K**	SNW-134 x 5 13/16 SNW-134 x 5 7/8 **SNW-134 x 5 15/16** SNW-134 x 6	**SAF634**	**SR-40-34**	LER 138 LER 139 **LER 140** LER 141	**485**
3 3/8	**11 1/4**	**3 47/64**	**4**	**1 1/4**	**22336K**	**SNW-136 x 6 7/16**	**SAF636**	**SR-0-36**	**LER 148**	**545**
3 11/16	**11 1/2**	**3 57/64**	**4**	**1 1/2**	**22338K**	SNW-138 x 6 13/16 SNW-138 x 6 7/8 **SNW-138 x 6 15/16** SNW-138 x 7	**SAF638**	**SR-44-38**	LER 153 LER 154 **LER 155** LER 156	**655**
3 3/4	**12 1/4**	**4 5/64**	**4**	**1 1/2**	**22340K**	SNW-140 x 7 1/8 **SNW-140 x 7 3/16** SNW-140 x 7 1/4	**SAF640**	**SR-0-40**	LER 158 **LER 159** LER 160	**725**

(1)Bold shaft sizes are standard. When ordering non-standard pillow block assemblies specify the shaft size.
(2)See page D-76, table D-20 for suggested shaft diameter S-1 tolerances.
(3)Includes sleeve, locknut and lockwasher. Add shaft size to order.
(4)Housing Only includes cap, base, cap bolts, triple-ring seals and stabilizing ring as required. When ordering non-standard housing only, specify the shaft size.
(5)Stabilizing ring used for fixed (FX) block; do not use for float (FL) mounting.
NOTE: Speed ratings are found in the dimension tables on pages D-37 through D-43.

INCH TAPERED BORE MOUNTING SDAF225 AND SDAF226 SERIES

- Each assembly includes the housing cap and base, cap bolts, bearing, bearing adapter, locknut and lockwasher, stabilizing ring and triple-ring seals.
- To order pillow block housing only, use the number listed in the Housing Only column. These units include cap, base, cap bolts, triple-ring seals and stabilizing ring.
- Assemblies and pillow blocks described on this page constitute fixed units.
- To order float units, specify the part number plus the suffix float or FL.
- Assemblies shown are furnished in cast iron. If cast steel is desired, add the letter S to the alpha prefix (e.g., SDAFS 22515).

Pillow Block Assembly[1]	Shaft Dia. S-1[2]	A	B	C	D	E		F	H
						Max.	Min.		
	in.	in.	in.	in.	in.	in.	in.	in.	in.
SERIES SDAF225									
SDAF22520	3 3/8 **3 7/16** 3 1/2	**4 1/2**	**15 1/4**	**6**	**1 7/8**	**13 1/8**	**11 5/8**	**3 3/8**	**8 15/16**
SDAF22522	3 13/16 3 7/8 **3 15/16** 4	**4 15/16**	**16 1/2**	**6 3/4**	**2 1/8**	**14 1/2**	**12 5/8**	**4**	**9 7/8**
SDAF22524	4 1/16 4 1/8 **4 3/16** 4 1/4	**5 1/4**	**16 1/2**	**6 7/8**	**2 1/4**	**14 1/2**	**13 1/4**	**4 1/8**	**10 1/2**
SDAF22526	4 5/16 4 3/8 **4 7/16** 4 1/2	**6**	**18 3/8**	**7 1/2**	**2 3/8**	**16**	**14 5/8**	**4 1/2**	**11 7/8**
SDAF22528	4 13/16 4 7/8 **4 15/16** 5	**6**	**20 1/8**	**7 1/2**	**2 3/8**	**17 1/8**	**16**	**4 1/2**	**12 1/16**
SDAF22530	5 1/8 **5 3/16** 5 1/4	**6 5/16**	**21 1/4**	**7 7/8**	**2 1/2**	**18 1/4**	**17**	**4 3/4**	**12 13/16**
SDAF22532	5 3/8 **5 7/16** 5 1/2	**6 11/16**	**22**	**8 1/4**	**2 1/2**	**19 1/4**	**17 3/8**	**5**	**13 11/16**
SDAF22534	**5 15/16**	**7 1/16**	**24 3/4**	**9**	**2 1/2**	**21 5/8**	**19 3/8**	**5 1/2**	**14 1/4**
SDAF22536	6 5/16 6 3/8 **6 7/16** 6 1/2	**7 1/2**	**26 3/4**	**9 3/8**	**2 3/4**	**23 5/8**	**20 7/8**	**5 7/8**	**15 3/16**
SDAF22538	**6 15/16**	**7 7/8**	**27 5/8**	**10**	**3**	**23 1/2**	**21 1/2**	**6 1/4**	**16 1/4**
SDAF22540	**7 3/16**	**8 1/4**	**28 3/4**	**10 1/2**	**3 1/4**	**25**	**23**	**6 3/4**	**17 1/8**
SDAF22544	**7 15/16**	**9 1/2**	**32**	**11 1/4**	**3 1/2**	**27 7/8**	**25 5/8**	**7 1/4**	**19 1/4**

[1]Bold shaft sizes are standard. When ordering non-standard pillow block assemblies, specify the shaft size.
[2]See page D-76, table D-20 for suggested shaft diameter S-1 tolerances.
[3]Includes sleeve, locknut and lockwasher. Add shaft size to order.
[4]Housing Only includes cap, base, cap bolts, triple-ring seals and stabilizing ring as required. When ordering non-standard housing only specify the shaft size.
[5]Stabilizing ring used for fixed (FX) block; do not use for float (FL) mounting.
NOTE: Speed ratings are found in the dimension tables on pages D-37 through D-43.

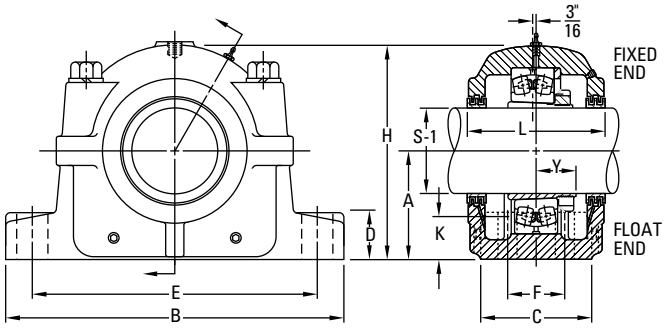

K Oil Level	L	Y	Base Bolts Required No.	Base Bolts Required Size	Bearing No.	Adapter Assembly No.[3]	Housing Only[4]	Stabilizing Ring 1 Req'd[5]	Triple Seal 2 Req'd	Assembly Wt.
in.	in.	in.		in.						lbs.
						SNW-20 x 3 3/8			LER 74	
1 3/4	**6 3/4**	**1 49/64**	**4**	**3/4**	**22220K**	**SNW-20 x 3 7/16**	**SDAF520**	**SR-20-17**	**LER 75**	**81**
						SNW-20 x 3 1/2			LER 76	
						SNW-22 x 3 13/16			LER 91	
						SNW-22 x 3 7/8			LER 92	
1 7/8	**7 1/4**	**1 61/64**	**4**	**7/8**	**22222K**	**SNW-22 x 3 15/16**	**SDAF522**	**SR-22-19**	**LER 93**	**94**
						SNW-22 x 4			LER 94	
						SNW-24 x 4 1/16			LER 111	
						SNW-24 x 4 1/8			LER 112	
1 15/16	**7 3/8**	**2 3/32**	**4**	**7/8**	**22224K**	**SNW-24 x 4 3/16**	**SDAF524**	**SR-24-20**	**LER 113**	**137**
						SNW-24 x 4 1/4			LER 114	
						SNW-26 x 4 5/16			LER 115	
						SNW-26 x 4 3/8			LER 116	
2 7/16	**8**	**2 17/64**	**4**	**1**	**22226K**	**SNW-26 x 4 7/16**	**SDAF526**	**SR-26-0**	**LER 117**	**159**
						SNW-26 x 4 1/2			LER 118	
						SNW-28 x 4 13/16			LER 120	
						SNW-28 x 4 7/8			LER 121	
2 1/8	**7 13/16**	**2 13/32**	**4**	**1 1/8**	**22228K**	**SNW-28 x 4 15/16**	**SDAF528**	**SR-28-0**	**LER 122**	**189**
						SNW-28 x 5			LER 123	
						SNW-30 x 5 1/8			LER 124	
2 3/16	**8 3/8**	**2 37/64**	**4**	**1 1/8**	**22230K**	**SNW-30 x 5 3/16**	**SDAF530**	**SR-30-0**	**LER 125**	**225**
						SNW-30 x 5 1/4			LER 126	
						SNW-32 x 5 3/8			LER 129	
2 3/16	**8 3/4**	**2 49/64**	**4**	**1 1/8**	**22232K**	**SNW-32 x 5 7/16**	**SDAF532**	**SR-32-0**	**LER 130**	**300**
						SNW-32 x 5 1/2			LER 131	
2 5/16	**9 5/8**	**2 59/64**	**4**	**1 1/4**	**22234K**	**SNW-34 x 5 15/16**	**SDAF534**	**SR-34-0**	**LER 140**	**310**
						SNW-36 x 6 5/16			LER 146	
						SNW-36 x 6 3/8			LER 147	
2 9/16	**10**	**2 61/64**	**4**	**1 1/4**	**22236K**	**SNW-36 x 6 7/16**	**SDAF536**	**SR-36-30**	**LER 148**	**350**
						SNW-36 x 6 1/2			LER 149	
2 5/8	**10 5/8**	**3 7/64**	**4**	**1 3/8**	**22238K**	**SNW-38 x 6 15/16**	**SDAF538**	**SR-38-32**	**LER 224**	**420**
2 11/16	**11 1/8**	**3 9/32**	**4**	**1 3/8**	**22240K**	**SNW-40 x 7 3/16**	**SDAF540**	**SR-40-34**	**LER 228**	**545**
3 3/8	**11 7/8**	**3 17/32**	**4**	**1 1/2**	**22244K**	**SNW-44 x 7 15/16**	**SDAF544**	**SR-44-38**	**LER 236**	**665**

(1)Bold shaft sizes are standard. When ordering non-standard pillow block assemblies, specify the shaft size.
(2)See page D-76, table D-20 for suggested shaft diameter S-1 tolerances.
(3)Includes sleeve, locknut and lockwasher. Add shaft size to order.
(4)Housing Only includes cap, base, cap bolts, triple-ring seals and stabilizing ring as required. When ordering non-standard housing only specify the shaft size.
(5)Stabilizing ring used for fixed (FX) block; do not use for float (FL) mounting.
NOTE: Speed ratings are found in the dimension tables on pages D-37 through D-43.

Continued on next page.

INCH TAPERED BORE MOUNTING SDAF225 AND SDAF226 SERIES – *continued*

- Each assembly includes the housing cap and base, cap bolts, bearing, bearing adapter, locknut and lockwasher, stabilizing ring and triple-ring seals.
- To order pillow block housing only, use the number listed in the Housing Only column. These units include cap, base, cap bolts, triple-ring seals and stabilizing ring.
- Assemblies and pillow blocks described on this page constitute fixed units.
- To order float units, specify the part number plus the suffix float or FL.
- Assemblies shown are furnished in cast iron. If cast steel is desired, add the letter S to the alpha prefix (e.g., SAFS 22515).

Continued from previous page.

Pillow Block Assembly[1]	Shaft Dia. S-1[2]	A	B	C	D	E Max.	E Min.	F	H
	in.	in.	in.	in.	in.	in.	in.	in.	in.
SERIES SDAF226									
SDAF22617	2 7/8 **2 15/16** 3	**4 1/2**	**15 1/4**	**6**	**1 7/8**	**13 1/8**	**11 5/8**	**3 3/8**	**8 15/16**
SDAF22618	3 1/16 3 1/8 **3 3/16** 3 1/4	**4 3/4**	**15 1/2**	**6 1/8**	**2**	**13 1/2**	**12**	**3 5/8**	**9 7/16**
SDAF22620	3 5/16 3 3/8 **3 7/16** 3 1/2	**5 1/4**	**16 1/2**	**6 7/8**	**2 1/4**	**14 1/2**	**13 1/4**	**4 1/8**	**10 1/2**
SDAF22622	3 13/16 3 7/8 **3 15/16** 4	**6**	**18 3/8**	**7 1/2**	**2 3/8**	**16**	**14 5/8**	**4 1/2**	**11 7/8**
SDAF22624	4 1/16 4 1/8 **4 3/16** 4 1/4	**6 5/16**	**21 1/4**	**7 7/8**	**2 1/2**	**18 1/4**	**17**	**4 3/4**	**12 13/16**
SDAF22626	4 5/16 4 3/8 **4 7/16** 4 1/2 4 9/16	**6 11/16**	**22**	**8 1/4**	**2 1/2**	**19 1/4**	**17 3/8**	**5**	**13 11/16**
SDAF22628	**4 15/16**	**7 1/16**	**24 3/4**	**9**	**2 1/2**	**21 5/8**	**19 3/8**	**5 1/2**	**14 1/4**
SDAF22630	5 1/8 **5 3/16** 5 1/4 5 3/8 5 5/16	**7 1/2**	**26 3/4**	**9 3/8**	**2 3/4**	**23 5/8**	**20 7/8**	**5 7/8**	**15 3/16**
SDAF22632	**5 7/16**	**7 7/8**	**27 5/8**	**10**	**3**	**23 1/2**	**21 1/2**	**6 1/4**	**16 1/4**
SDAF22634	**5 15/16**	**8 1/4**	**28 3/4**	**10 1/2**	**3 1/4**	**25**	**23**	**6 3/4**	**17 1/8**
SDAF22636	**6 7/16**	**8 7/8**	**30 1/2**	**10 3/4**	**3 1/4**	**26 3/8**	**24 1/8**	**6 7/8**	**17 15/16**
SDAF22638	**6 15/16**	**9 1/2**	**32**	**11 1/4**	**3 1/2**	**27 7/8**	**25 5/8**	**7 1/4**	**19 1/4**
SDAF22640	**7 3/16**	**9 7/8**	**33 1/2**	**11 3/4**	**3 1/2**	**29 1/4**	**26 5/8**	**7 5/8**	**19 15/16**

[1]Bold shaft sizes are standard. When ordering non-standard pillow block assemblies, specify the shaft size.
[2]See page D-76, table D-20 for suggested shaft diameter S-1 tolerances.
[3]Includes sleeve, locknut and lockwasher. Add shaft size to order.
[4]Housing Only includes cap, base, cap bolts, triple-ring seals and stabilizing ring as required. When ordering non-standard housing only specify the shaft size.
[5]Stabilizing ring used for fixed (FX) block; do not use for float (FL) mounting.
NOTE: Speed ratings are found in the dimension tables on pages D-37 through D-43.

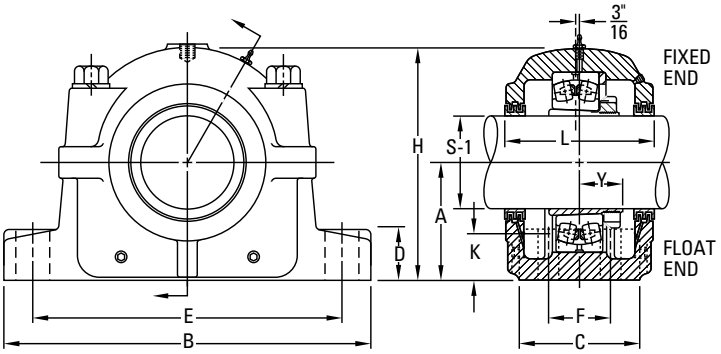

K Oil Level	L	Y	Base Bolts Required No.	Base Bolts Required Size	Bearing No.	Adapter Assembly No.[3]	Housing Only[4]	Stabilizing Ring 1 Req'd[5]	Triple Seal 2 Req'd	Assembly Wt.
in.	in.	in.		in.						lbs.
						SNW-117 x 2 7/8			LER 58	
1 13/16	**6 3/4**	**1 57/64**	**4**	**3/4**	**22317K**	**SNW-117 x 2 15/16**	**SDAF617**	**SR-20-17**	**LER 59**	**94**
						SNW-117 x 3			LER 60	
						SNW-118 x 3 1/16			LER 67	
						SNW-118 x 3 1/8			LER 68	
2	**6 7/8**	**2 3/64**	**4**	**3/4**	**22318K**	**SNW-118 x 3 3/16**	**SDAF618**	**SR-21-18**	**LER 69**	**137**
						SNW-118 x 3 1/4			LER 70	
						SNW-120 x 3 5/16			LER 73	
						SNW-120 x 3 3/8			LER 74	
2 1/8	**7 3/8**	**2 19/64**	**4**	**7/8**	**22320K**	**SNW-120 x 3 7/16**	**SDAF620**	**SR-24-20**	**LER 75**	**159**
						SNW-120 x 3 1/2			LER 76	
						SNW-122 x 3 13/16			LER 91	
						SNW-122 x 3 7/8			LER 92	
2 1/2	**8**	**2 31/64**	**4**	**1**	**22322K**	**SNW-122 x 3 15/16**	**SDAF622**	**SR-0-22**	**LER 93**	**189**
						SNW-122 x 4			LER 94	
						SNW-124 x 4 1/16			LER 111	
						SNW-124 x 4 1/8			LER 112	
2 9/16	**8 3/8**	**2 41/64**	**4**	**1 1/8**	**22324K**	**SNW-124 x 4 3/16**	**SDAF624**	**SR-0-24**	**LER 113**	**225**
						SNW-124 x 4 1/4			LER 114	
						SNW-126 x 4 5/16			LER 115	
						SNW-126 x 4 3/8			LER 116	
2 5/8	**8 3/4**	**2 27/64**	**4**	**1 1/8**	**22326K**	**SNW-126 x 4 7/16**	**SDAF626**	**SR-0-26**	**LER 117**	**300**
						SNW-126 x 4 1/2			LER 118	
						SNW-126 x 4 9/16			LER 119	
2 11/16	**9 5/8**	**3 5/64**	**4**	**1 1/8**	**22328K**	**SNW-128 x 4 15/16**	**SDAF628**	**SR-0-28**	**LER 122**	**310**
						SNW-130 x 5 1/8			LER 124	
2 7/8	**9 3/4**	**3 17/64**	**4**	**1 1/4**	**22330K**	**SNW-130 x 5 3/16**	**SDAF630**	**SR-36-30**	**LER 125**	**395**
						SNW-130 x 5 1/4			LER 126	
						SNW-130 x 5 5/16			LER 128	
						SNW-130 x 5 3/8			LER 127	
2 15/16	**10 5/8**	**3 7/16**	**4**	**1 3/8**	**22332K**	**SNW-132 x 5 7/16**	**SDAF632**	**SR-38-32**	**LER 211**	**420**
3 1/16	**11 1/8**	**3 19/32**	**4**	**1 3/8**	**22334K**	**SNW-134 x 5 15/16**	**SDAF634**	**SR-40-34**	**LER 215**	**525**
3 7/8	**11 3/8**	**3 47/64**	**4**	**1 1/2**	**22336K**	**SNW-136 x 6 7/16**	**SDAF636**	**SR-0-36**	**LER 220**	**645**
3 11/16	**11 13/16**	**4 57/64**	**4**	**1 1/2**	**22338K**	**SNW-138 x 6 15/16**	**SDAF638**	**SR-44-38**	**LER 224**	**705**
3 3/4	**12 1/4**	**4 5/64**	**4**	**1 5/8**	**22340K**	**SNW-140 x 7 3/16**	**SDAF640**	**SR-0-40**	**LER 228**	**825**

(1)Bold shaft sizes are standard. When ordering non-standard pillow block assemblies, specify the shaft size.
(2)See page D-76, table D-20 for suggested shaft diameter S-1 tolerances.
(3)Includes sleeve, locknut and lockwasher. Add shaft size to order.
(4)Housing Only includes cap, base, cap bolts, triple-ring seals and stabilizing ring as required. When ordering non-standard housing only specify the shaft size.
(5)Stabilizing ring used for fixed (FX) block; do not use for float (FL) mounting.
NOTE: Speed ratings are found in the dimension tables on pages D-37 through D-43.

INCH TAPERED BORE MOUNTING SAF230K, SDAF230K SERIES

- Each assembly includes the housing cap and base, cap bolts, bearing, bearing adapter, locknut and lockwasher, stabilizing ring and triple-ring seals.
- If only the pillow block is desired, use the numbers listed in the Housing Only column. These units include cap and base, cap bolts, triple-ring seals and stabilizing ring.
- Assembly and pillow blocks described on this page constitute fixed units.
- To order float units, specify the part number plus the suffix float or FL.
- All assemblies shown are furnished in cast iron. If cast steel is desired, add the letter S to the alpha prefix (e.g., SAFS 23024).
- Please note that for applications SAF23048 and larger, the shaft size must be included in the part description when ordering (e.g., SAF23048-8 15/16).
- Two stabilizing rings are supplied with housings SAF048 through SAF056 and SDAF060K through SDAF076K. For fixed applications both rings must be used. Do not use stabilizing rings for float mounting.

Pillow Block Assembly[1]	Shaft Dia. S-1[2]	A	B	C	D	E		F	H	K
						Max.	Min.			Oil Level
	in.	in.	in.	in.	in.	in.	in.	in.	in.	in.
SERIES SAF230K										
SAF23024K	4 1/16 4 1/8 **4 3/16** 4 1/4	**4 1/2**	**15 1/4**	**4 3/8**	**1 3/4**	**13 1/8**	**11 5/8**	**2 3/8**	**8 11/16**	**1 9/16**
SAF23026K	4 5/16 4 3/8 **4 7/16** 4 1/2	**4 15/16**	**16 1/2**	**4 3/4**	**2**	**14 1/2**	**12 5/8**	**2 3/4**	**9 9/16**	**1 11/16**
SAF23028K	4 13/16 4 7/8 **4 15/16** 5	**5 1/4**	**16 1/2**	**4 3/4**	**2 1/8**	**14 1/2**	**13 1/4**	**2 3/4**	**10 1/4**	**1 13/16**
SAF23030K	5 1/8 **5 3/16** 5 1/4	**6**	**18 3/8**	**5 1/8**	**2 3/8**	**16**	**14 5/8**	**3 1/4**	**11 9/16**	**2 5/16**
SAF23032K	5 3/8 **5 7/16** 5 1/2	**6**	**18 3/8**	**5 1/8**	**2 3/8**	**16**	**14 5/8**	**3 1/4**	**11 9/16**	**2 1/16**
SAF23034K	5 13/16 5 7/8 **5 15/16** 6	**6**	**20 1/8**	**5 7/8**	**2 3/8**	**17 1/8**	**16**	**3 3/8**	**11 3/4**	**1 3/4**
SAF23036K	6 5/16 6 3/8 **6 7/16** 6 1/2	**6 11/16**	**22**	**6 1/4**	**2 5/8**	**19 1/4**	**17 3/8**	**3 3/4**	**13 5/16**	**2 3/16**
SAF23038K	6 13/16 6 7/8 **6 15/16** 7	**6 11/16**	**22**	**6 1/4**	**2 5/8**	**19 1/4**	**17 3/8**	**3 3/4**	**13 5/16**	**1 15/16**
SAF23040K	7 1/8 **7 3/16** 7 1/4	**7 1/16**	**24 3/4**	**6 3/4**	**2 3/4**	**21 5/8**	**19 3/8**	**4 1/4**	**14 9/16**	**2 13/16**
SAF23044K	7 13/16 7 7/8 **7 15/16** 8	**7 7/8**	**28**	**7 1/2**	**3 1/8**	**24 3/8**	**21 5/8**	**4 1/2**	**15 11/16**	**2 3/8**

[1]Bold shaft sizes are standard. When ordering non-standard pillow block assemblies, specify shaft size.
[2]See page D-76, table D-20 for suggested shaft diameter S-1 tolerances.
[3]Includes sleeve, locknut and lockwasher. Add shaft size to order.
[4]Housing Only includes cap, base, cap bolts, triple-ring seals and stabilizing ring as required. When ordering non-standard housing only specify the shaft size.
[5]Stabilizing ring used for fixed (FX) block; do not use for float (FL) mounting.
NOTE: Speed ratings are found in the dimension tables on pages D-37 through D-43.

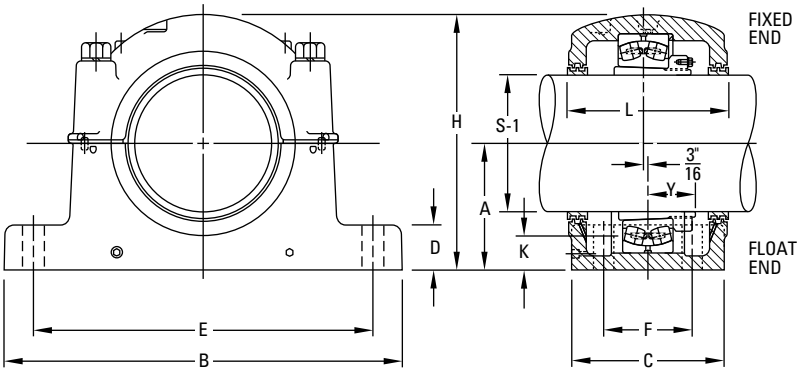

L	Y	Base Bolts 4 Req'd	Bearing No.	Adapter Assembly No.[3]	Housing Only[4]	Stabilizing Ring 1 Req'd[5]	Triple Seal 2 Req'd	Assembly Wt.
in.	in.	in.						lbs.
				SNW-3024 x 4 1/16			LER 111	
				SNW-3024 x 4 1/8			LER 112	
6	**1 55/64**	**3/4**	**23024K**	**SNW-3024 x 4 3/16**	**SAF024K**	**SR-20-17**	**LER 113**	**60**
				SNW-3024 x 4 1/4			LER 114	
				SNW-3026 x 4 5/16			LER 115	
				SNW-3026 x 4 3/8			LER 116	
6 3/8	**2 1/32**	**3/4**	**23026K**	**SNW-3026 x 4 7/16**	**SAF026K**	**SR-22-19**	**LER 117**	**76**
				SNW-3026 x 4 1/2			LER 118	
				SNW-3028 x 4 13/16			LER 120	
				SNW-3028 x 4 7/8			LER 121	
7 3/8	**2 1/8**	**3/4**	**23028K**	**SNW-3028 x 4 15/16**	**SAF028K**	**SR- 0-20**	**LER 122**	**90**
				SNW-3028 x 5			LER 123	
				SNW-3030 x 5 1/8			LER 124	
8	**2 13/64**	**7/8**	**23030K**	**SNW-3030 x 5 3/16**	**SAF030K**	**SR- 0-21**	**LER 125**	**125**
				SNW-3030 x 5 1/4			LER 126	
				SNW-3032 x 5 3/8			LER 129	
8	**2 11/32**	**7/8**	**23032K**	**SNW-3032 x 5 7/16**	**SAF032K**	**SR- 0-22**	**LER 130**	**132**
				SNW-3032 x 5 1/2			LER 131	
				SNW-3034 x 5 13/16			LER 138	
				SNW-3034 x 5 7/8			LER 139	
7 3/4	**2 33/64**	**1**	**23034K**	**SNW-3034 x 5 15/16**	**SAF034K**	**SR- 0-24**	**LER 140**	**154**
				SNW-3034 x 6			LER 141	
				SNW-3036 x 6 5/16			LER 146	
				SNW-3036 x 6 3/8			LER 147	
8 3/4	**2 11/16**	**1**	**23036K**	**SNW-3036 x 6 7/16**	**SAF036K**	**SR- 0-26**	**LER 148**	**212**
				SNW-3036 x 6 1/2			LER 149	
				SNW-3038 x 6 13/16			LER 153	
				SNW-3038 x 6 7/8			LER 154	
8 3/4	**2 47/64**	**1**	**23038K**	**SNW-3038 x 6 15/16**	**SAF038K**	**SR-32- 0**	**LER 155**	**220**
				SNW-3038 x 7			LER 156	
				SNW-3040 x 7 1/8			LER 158	
9 3/8	**2 15/16**	**1**	**23040K**	**SNW-3040 x 7 3/16**	**SAF040K**	**SR-34- 0**	**LER 159**	**295**
				SNW-3040 x 7 1/4			LER 160	
				SNW-3044 x 7 13/16			LER 165	
				SNW-3044 x 7 7/8			LER 166	
10 3/4	**3 5/32**	**1 1/4**	**23044K**	**SNW-3044 x 7 15/16**	**SAF044K**	**SR-38-32**	**LER 167**	**370**
				SNW-3044 x 8			LER 168	

[1]Bold shaft sizes are standard. When ordering non-standard pillow block assemblies, specify shaft size.
[2]See page D-76, table D-20 for suggested shaft diameter S-1 tolerances.
[3]Includes sleeve, locknut and lockwasher. Add shaft size to order.
[4]Housing Only includes cap, base, cap bolts, triple-ring seals and stabilizing ring as required. When ordering non-standard housing only specify the shaft size.
[5]Stabilizing ring used for fixed (FX) block; do not use for float (FL) mounting.
NOTE: Speed ratings are found in the dimension tables on pages D-37 through D-43.

Continued on next page.

INCH TAPERED BORE MOUNTING SAF230K, SDAF230K SERIES – *continued*

- Each assembly includes the housing cap and base, cap bolts, bearing, bearing adapter, locknut and lockwasher, stabilizing ring and triple-ring seals.
- If only the pillow block is desired, use the numbers listed in the Housing Only column. These units include cap and base, cap bolts, triple-ring seals and stabilizing ring.
- Assembly and pillow blocks described on this page constitute fixed units.
- To order float units, specify the part number plus the suffix float or FL.
- All assemblies shown are furnished in cast iron. If cast steel is desired, add the letter S to the alpha prefix (e.g., SAFS 23024).
- Please note that for applications SAF23048 and larger, the shaft size must be included in the part description when ordering (e.g., SAF23048-8 15/16).
- Two stabilizing rings are supplied with housings SAF048 through SAF056 and SDAF060K through SDAF076K. For fixed applications both rings must be used. Do not use stabilizing rings for float mounting.

Continued from previous page.

Pillow Block Assembly[1]	Shaft Dia. S-1[2]	A	B	C	D	E		F	H	K
						Max.	Min.			Oil Level
	in.	in.	in.	in.	in.	in.	in.	in.	in.	in.
SAF23048K-8 7/16	8 7/16	8 1/4	29 1/2	8	3 3/8	25	22 1/2	5	17 3/16	2 1/4
SAF23048K-8 1/2	8 1/2	8 1/4	29 1/2	8	3 3/8	25	22 1/2	5	17 3/16	2 1/4
SAF23048K-8 15/16	8 15/16	8 1/4	29 1/2	8	3 3/8	25	22 1/2	5	17 3/16	2 1/4
SAF23048K-9	9	8 1/4	29 1/2	8	3 3/8	25	22 1/2	5	17 3/16	2 1/4
SAF23052K-9 7/16	9 7/16	9 1/2	32 3/4	8 3/4	3 3/4	27 7/8	24 3/4	5 1/4	19 7/16	2 15/16
SAF23052K-9 1/2	9 1/2	9 1/2	32 3/4	8 3/4	3 3/4	27 7/8	24 3/4	5 1/4	19 7/16	2 15/16
SAF23056K-9 15/16	9 15/16	9 7/8	34 1/4	9	4	29 1/2	26 1/4	5 1/2	20 3/16	2 15/16
SAF23056K-10	10	9 7/8	34 1/4	9	4	29 1/2	26 1/4	5 1/2	20 3/16	2 15/16
SAF23056K-10 7/16	10 7/16	9 7/8	34 1/4	9	4	29 1/2	26 1/4	5 1/2	20 3/16	2 15/16
SAF23056K-10 1/2	10 1/2	9 7/8	34 1/4	9	4	29 1/2	26 1/4	5 1/2	20 3/16	2 15/16
SERIES SDAF230K										
SDAF23060K-10 15/16	10 15/16	12	38 1/4	14 3/4	3 1/2	33 1/2	32 3/4	9	23 7/16	4 7/16
SDAF23060K-11	11	12	38 1/4	14 3/4	3 1/2	33 1/2	32 3/4	9	23 7/16	4 7/16
SDAF23064K-11 7/16	11 7/16	12	38 1/4	14 3/4	3 1/2	33 1/2	32 3/4	9	23 7/16	4 1/16
SDAF23064K-11 1/2	11 1/2	12	38 1/4	14 3/4	3 1/2	33 1/2	32 3/4	9	23 7/16	4 1/16
SDAF23064K-11 15/16	11 15/16	12	38 1/4	14 3/4	3 1/2	33 1/2	32 3/4	9	23 7/16	4 1/16
SDAF23064K-12	12	12	38 1/4	14 3/4	3 1/2	33 1/2	32 3/4	9	23 7/16	4 1/16
SDAF23068K-12 7/16	12 7/16	12	39	15 1/4	4 3/16	33 1/2	32	10	24	3 7/16
SDAF23068K-12 1/2	12 1/2	12	39	15 1/4	4 3/16	33 1/2	32	10	24	3 7/16
SDAF23072K-12 15/16	12 15/16	12 13/16	41 3/4	15 3/4	4 1/2	36 1/2	35	10 1/2	26	3 7/8
SDAF23072K-13	13	12 13/16	41 3/4	15 3/4	4 1/2	36 1/2	35	10 1/2	26	3 7/8
SDAF23072K-13 7/16	13 7/16	12 13/16	41 3/4	15 3/4	4 1/2	36 1/2	35	10 1/2	26	3 7/8
SDAF23072K-13 1/2	13 1/2	12 13/16	41 3/4	15 3/4	4 1/2	36 1/2	35	10 1/2	26	3 7/8
SDAF23076K-13 15/16	13 15/16	12 13/16	41 3/4	15 3/4	4 1/2	36 1/2	35	10 1/2	26	3 7/16
SDAF23076K-14	14	12 13/16	41 3/4	15 3/4	4 1/2	36 1/2	35	10 1/2	26	3 7/16
SDAF23080K-15	15	14 1/2	46	17 1/8	5 1/4	40 3/4	39 1/4	11	29	4 7/16
SDAF23084K-15 3/4	15 3/4	14 1/2	46	17 1/8	5 1/4	40 3/4	39 1/4	11	29	4 1/16
SDAF23088K-16 1/2	16 1/2	15 1/2	48 3/4	18 3/4	5 1/2	43 1/2	41 3/4	12 1/4	30 1/2	4 1/2
SDAF23092K-17	17	15 1/2	48 3/4	18 3/4	5 1/2	43 1/2	41 3/4	12 1/4	30 1/2	4
SDAF23096K-18	18	17	53	21	5 1/2	46 1/8	44 3/8	14 1/2	33 3/4	5 1/8
SDAF230/530K-18 1/2	18 1/2	17	53	21	5 1/2	46 1/8	44 3/8	14 1/2	33 3/4	4 3/4
SDAF230/530K-19 1/2	19 1/2	18	54 1/4	21 5/8	5 3/4	48 7/8	47 1/8	15	35 3/4	4 13/16

[1]Bold shaft sizes are standard. When ordering non-standard pillow block assemblies, specify shaft size.
[2]See page D-76, table D-20 for suggested shaft diameter S-1 tolerances.
[3]Includes sleeve, locknut and lockwasher. Add shaft size to order.
[4]Housing Only includes cap, base, cap bolts, triple-ring seals and stabilizing ring as required. When ordering non-standard housing only specify the shaft size.
[5]Stabilizing ring used for fixed (FX) block; do not use for float (FL) mounting.
NOTE: Speed ratings are found in the dimension tables on pages D-37 through D-43.

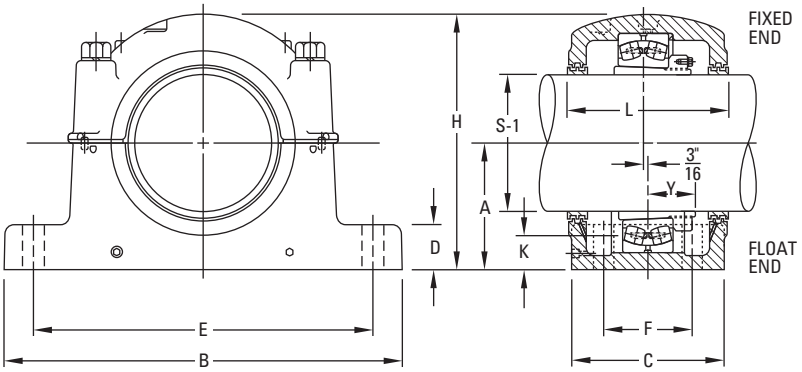

L	Y	Base Bolts 4 Req'd	Bearing No.	Adapter Assembly No.[3]	Housing Only[4]	Stabilizing Ring 1 Req'd[5]	Triple Seal 2 Req'd	Assembly Wt.
in.	in.	in.						lbs.
11 1/8	3 17/32	1 1/4	23048K	SNP-3048 x 8 7/16	SAF048K-8 7/16	A8897	LER 526	430
11 1/8	3 17/32	1 1/4	23048K	SNP-3048 x 8 1/2	SAF048K-8 1/2	A8897	LER 527	428
11 1/8	3 17/32	1 1/4	23048K	SNP-3048 x 8 15/16	SAF048K-8 15/16	A8897	LER 529	422
11 1/8	3 17/32	1 1/4	23048K	SNP-3048 x 9	SAF048K-9	A8897	LER 530	420
11 7/8	3 53/64	1 1/2	23052K	SNP-3052 x 9 7/16	SAF052K-9 7/16	A8898	LER 178-1	587
11 7/8	3 53/64	1 1/2	23052K	SNP-3052 x 9 1/2	SAF052K-9 1/2	A8898	LER 178	585
12 1/16	3 61/64	1 1/2	23056K	SNP-3056 x 10	SAF056K-9 15/16	A8819	ER 751	640
12 1/16	3 61/64	1 1/2	23056K	SNP-3056 x 10 7/16	SAF056K-10	A8819	ER705	635
12 1/16	3 61/64	1 1/2	23056K	SNP-3056 x 10 1/2	SAF056K-10 7/16	A8819	ER 745	625
12 1/16	3 61/64	1 1/2	23056K	SNP-3056 x 9 15/16	SAF056K-10 1/2	A8819	ER 710	620
15 1/2	4 9/32	1 5/8	23060K	SNP-3060 x 10 15/16	SDAF060K-10 15/16	A8967	ER 858	1175
15 1/2	4 9/32	1 5/8	23060K	SNP-3060 x 11	SDAF060K-11	A8967	ER 825	1174
15 1/2	4 7/16	1 5/8	23064K	SNP-3064 x 11 7/16	SDAF064K-11 7/16	A8968	ER 861-1	1275
15 1/2	4 7/16	1 5/8	23064K	SNP-3064 x 11 1/2	SDAF064K-11 1/2	A8968	ER 832-1	1274
15 1/2	4 7/16	1 5/8	23064K	SNP-3064 x 11 15/16	SDAF064K-11 15/16	A8968	ER 859	1269
15 1/2	4 7/16	1 5/8	23064K	SNP-3064 x 12	SDAF064K-12	A8968	ER 818	1268
15 3/4	4 13/16	1 7/8	23068K	SNP-3068 x 12 7/16	SDAF068K-12 7/16	A8969	ER 865-1	1553
15 3/4	4 13/16	1 7/8	23068K	SNP-3068 x 12 1/2	SDAF068K-12 1/2	A8969	ER 866-1	1552
16 1/4	4 53/64	1 7/8	23072K	SNP-3072 x 12 15/16	SDAF072K-12 15/16	A8970	ER 869-1	1632
16 1/4	4 53/64	1 7/8	23072K	SNP-3072 x 13	SDAF072K-13	A8970	ER 846-1	1630
16 1/4	4 53/64	1 7/8	23072K	SNP-3072 x 13 7/16	SDAF072K-13 7/16	A8970	ER 872	1614
16 1/4	4 53/64	1 7/8	23072K	SNP-3072 x 13 1/2	SDAF072K-13 1/2	A8970	ER 823	1610
16 1/4	5 1/16	1 7/8	23076K	SNP-3076 x 13 15/16	SDAF076K-13 15/16	A8971	ER 875-1	1687
16 1/4	5 1/16	1 7/8	23076K	SNP-3076 x 14	SDAF076K-14	A8971	ER 876-1	1685
17 5/8	5 17/32	4, 2	23080K	SNP-3080 x 15	SDAF080K-15	A8974	ER 847-1	2300
17 5/8	5 9/16	4, 2	23084K	SNP-3084 x 15 3/4	SDAF084K-15 3/4	A8978	ER 969-1	2300
19 1/4	5 3/4	4, 2 1/4	23088K	SNP-3088 x 16 1/2	SDAF3088K-16 1/2	A8979	ER 958	2550
19 1/4	5 7/8	4, 2 1/4	23092K	SNP-3092 x 17	SDAF3092K-17	A8980	ER 838	2850
21 3/4	5 29/32	4, 2 1/4	23096K	SNP-3096 x 18	SDAF3096K-18	A8984	ER 888	4250
21 3/4	6 1/2	4, 2 1/4	230/500K	SNP-30-500 x 18 1/2	SDAF30-500K-18 1/2	A8976	ER 978	4350
22 1/4	6 27/32	4, 2 1/2	230/530/K	SNP-30-530 x 19 1/2	SDAF 30-530K-19 1/2		ER 926	5200

[1]Bold shaft sizes are standard. When ordering non-standard pillow block assemblies, specify shaft size.
[2]See page D-76, table D-20 for suggested shaft diameter S-1 tolerances.
[3]Includes sleeve, locknut and lockwasher. Add shaft size to order.
[4]Housing Only includes cap, base, cap bolts, triple-ring seals and stabilizing ring as required. When ordering non-standard housing only specify the shaft size.
[5]Stabilizing ring used for fixed (FX) block; do not use for float (FL) mounting.
NOTE: Speed ratings are found in the dimension tables on pages D-37 through D-43.

INCH TAPERED BORE MOUNTING SDAF231K AND SDAF232K SERIES

- Each assembly includes the housing cap and base, cap bolts, bearing, bearing adapter, locknut and lockwasher, stabilizing ring and triple-ring seals.
- To order pillow block housing only, use the numbers listed in the Housing Only column. These units include cap and base, cap bolts, triple-ring seals and stabilizing ring.
- Assembly and pillow blocks described on this page constitute fixed units.
- To order float units, specify part number plus suffix float or FL.
- All assemblies shown are furnished in cast iron. If cast steel is desired, add the letter S to the alpha prefix (e.g., SDAFS 23152K).

Pillow Block Assembly	Shaft Dia. S-1[1]	A	B	C	D	E		F	H
						Max.	Min.		
	in.	in.	in.	in.	in.	in.	in.	in.	in.
SERIES SDAF231K									
SDAF23152K	**9 7/16** 9 1/2	**10 1/4**	**35**	**13 1/8**	**3 3/4**	**30 1/2**	**29**	**8 3/4**	**20 7/8**
SDAF23156K	9 15/16 10 **10 7/16** 10 1/2	**12**	**38 1/4**	**14 3/4**	**3 3/8**	**33 1/2**	**32 3/4**	**9**	**23 7/16**
SDAF23160K	**10 15/16**	**12**	**38 1/4**	**14 3/4**	**3 3/8**	**33 1/2**	**32 3/4**	**9**	**23 7/16**
SDAF23164K	11 **11 15/16**	**12 13/16**	**41 3/4**	**15 3/4**	**4 1/2**	**36 1/2**	**35**	**10 1/2**	**25 3/4**
SDAF23168K	**12 7/16**	**14**	**43 3/4**	**17 3/4**	**5**	**38 1/4**	**36 3/4**	**10 3/4**	**27 7/8**
SDAF23172K	**13 7/16** 13 1/2	**14 1/2**	**46**	**17 1/8**	**5 1/4**	**40 3/4**	**39 1/4**	**11**	**28 7/8**
SDAF23176K	**13 15/16** 14	**14 1/2**	**46**	**17 1/8**	**5 1/4**	**40 3/4**	**39 1/4**	**11**	**28 7/8**
SDAF23180K	14 15/16 **15**	**15 1/2**	**48 3/4**	**18 3/4**	**5 1/2**	**43 1/2**	**41 3/4**	**12 1/4**	**30 1/2**
SDAF23184K	**15 3/4**	**17**	**52**	**21**	**5 1/2**	**46 1/8**	**44 3/8**	**14 1/2**	**33 3/4**
SDAF23188K	**16 1/2**	**17**	**52**	**21**	**5 1/2**	**46 1/8**	**44 3/8**	**14 1/2**	**33 3/4**
SDAF23192K	**17**	**18**	**54 1/4**	**21 5/8**	**5 3/4**	**48 7/8**	**47 1/8**	**15**	**35 3/4**
SDAF23196K	**18**	**18**	**54 1/4**	**21 5/8**	**5 3/4**	**48 7/8**	**47 1/8**	**15**	**35 3/4**
SERIES SDAF232K									
SDAF23248K	**8 15/16** 9	**10 1/4**	**35**	**13 1/8**	**3 3/4**	**30 1/2**	**29**	**8 3/4**	**20 7/8**
SDAF23252K	**9 7/16** 9 1/2	**12**	**38 1/4**	**14 3/4**	**3 3/8**	**33 1/2**	**32 3/4**	**9**	**23 7/16**
SDAF23256K	**10 7/16** 10 1/2	**12**	**38 1/4**	**14 3/4**	**3 3/8**	**33 1/2**	**32 3/4**	**9**	**23 7/16**
SDAF23260K	**10 15/16** 11	**12 13/16**	**41 3/4**	**15 3/4**	**4 1/2**	**36 1/2**	**35**	**10 1/2**	**25 3/4**
SDAF23264K	**11 15/16**	**14**	**43 3/4**	**17 3/4**	**5**	**38 1/4**	**36 3/4**	**10 3/4**	**27 7/8**
SDAF23268K	**12 7/16**	**14 1/2**	**46**	**17 1/8**	**5 1/4**	**40 3/4**	**39 1/4**	**11**	**28 7/8**
SDAF23272K	**13 7/16**	**15 1/2**	**48 3/4**	**18 3/4**	**5 1/2**	**43 1/2**	**41 3/4**	**12 1/4**	**30 1/2**
SDAF23276K	**13 15/16**	**15 1/2**	**48 3/4**	**18 3/4**	**5 1/2**	**43 1/2**	**41 3/4**	**12 1/4**	**30 1/2**
SDAF23280K	**14 15/16**	**17**	**52**	**21**	**5 1/2**	**46 1/8**	**44 3/8**	**14 1/2**	**33 3/4**
SDAF23284K	**15 3/4**	**18**	**54 1/4**	**21 5/8**	**5 3/4**	**48 7/8**	**47 1/8**	**15**	**35 3/4**
SDAF23288K	**16 1/2**	**18**	**54 1/4**	**21 5/8**	**5 3/4**	**48 7/8**	**47 1/8**	**15**	**35 3/4**

[1]Bold shaft sizes are standard. When ordering non-standard pillow block assemblies, specify shaft size.
[2]See page D-76, table D-20 for suggested shaft diameter S-1 tolerances.
[3]Includes sleeve, locknut and lockwasher. Add shaft size to order.
[4]Housing Only includes cap, base, cap bolts, triple-ring seals and stabilizing ring as required. When ordering non-standard housing only specify the shaft size.
[5]Stabilizing ring used for fixed (FX) block; do not use for float (FL) mounting.
NOTE: Speed ratings are found in the dimension tables on pages D-37 through D-43.

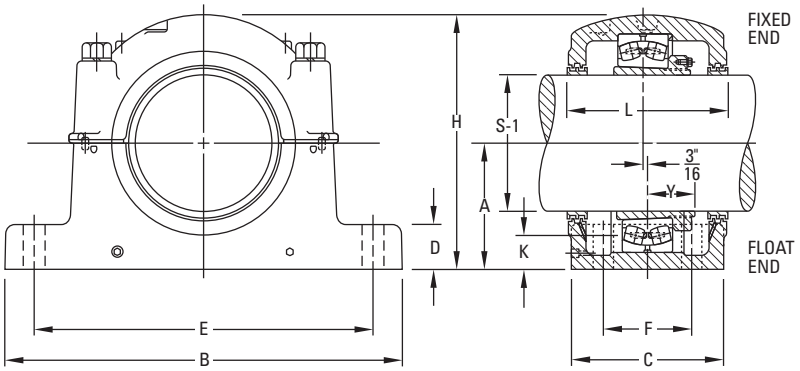

K Oil Level	L	Base Bolts 4 Req'd	Bearing No.	Adapter Assembly No.[3]	Housing Only[4]	Stabilizing Ring 1 Req'd[5]	Triple Seal 2 Req'd	Assembly Wt.
in.	in.	in.						lbs.
3 3/8	**13 3/4**	**1 5/8**	**23152K**	**SNP-3152 x 9 7/16**	**SDAF3152K**	**A5679**	**ER 891**	**1050**
				SNP-3152 x 9 1/2			ER 842	
				SNP-3156 x 9 15/16			ER 751-1	
				SNP-3156 x 10			ER 705-1	
4 3/4	**15 3/8**	**1 5/8**	**23156K**	SNP-3156 x 10 7/16	**SDAF3156K**	**A8967**	**ER 745-1**	**1300**
				SNP-3156 x 10 1/2			ER 710-1	
4 1/8	**15 3/8**	**1 5/8**	**23160K**	**SNP-3160 x 10 15/16**	**SDAF3160K**	**A8975**	**ER 858**	**1350**
				SNP-3160 x 11			ER 825	
4 3/8	**16 1/4**	**1 7/8**	**23164K**	**SNP-3164 x 11 15/16**	**SDAF3164K**	**A8970**	**ER 900**	**1900**
4 15/16	**18 1/4**	**2**	**23168K**	**SNP-3168 x 12 7/16**	**SDAF3168K**	**A8977**	**ER 865-1**	**2550**
5	**17 3/4**	**2**	**23172K**	**SNP-3172 x 13 7/16**	**SDAF3172K**	**A8974**	**ER 872**	**2600**
				SNP-3172 x 13 1/2			ER 823	
4 5/8	**17 3/4**	**2**	**23176K**	**SNP-3176 x 13 15/16**	**SDAF3176K**	**A8978**	**ER 875-1**	**2600**
				SNP-3176 x 14			ER 876-1	
				SNP-3180 x 14 15/16			ER 976	
5 1/8	**19 1/4**	**2 1/4**	**23180K**	**SNP-3180 x 15**	**SDAF3180K**	**A8979**	**ER 847-1**	**3000**
6	**21 3/4**	**2 1/4**	**23184K**	**SNP-3184 x 15 3/4**	**SDAF3184K**	**A8984**	**ER 969-1**	**4400**
5 9/16	**21 3/4**	**2 1/4**	**23188K**	**SNP-3188 x 16 1/2**	**SDAF3188K**	**A8976**	**ER 958-1**	**4600**
6	**22 1/4**	**2 1/2**	**23192K**	**SNP-3192 x 17**	**SDAF3192K**	**A8990**	**ER 838**	**5100**
5 1/2	**22 1/4**	**2 1/2**	**23196K**	**SNP-3196 x 18**	**SDAF3196K**	**A8998**	**ER 888-1**	**5200**
3 9/16	**13 3/4**	**1 5/8**	**23248K**	**SNP-148 x 8 15/16**	**SDAF3248K**	**A5679**	**ER 914**	**1100**
				SNP-148 x 9			ER 828	
4 3/4	**15 3/8**	**1 5/8**	**23252K**	**SNP-152 x 9 7/16**	**SDAF3252K**	**A8968**	**ER 891**	**1400**
				SNP-152 x 9 1/2			ER 842	
4 3/8	**15 3/8**	**1 5/8**	**23256K**	**SNP-3256 x 10 7/16**	**SDAF3256K**	**A8975**	**ER 745-1**	**1400**
				SNP-3256 x 10 1/2			ER 710-1	
4 1/2	**16 1/4**	**1 7/8**	**23260K**	**SNP-3260 x 10 15/16**	**SDAF3260K**	**A8970**	**ER 974**	**1900**
				SNP-3260 x 11			ER 974-1	
5 1/8	**18 1/4**	**2**	**23264K**	**SNP-3264 x 11 15/16**	**SDAF3264K**	**A8977**	**ER 900**	**2600**
5	**17 3/4**	**2**	**23268K**	**SNP-3268 x 12 7/16**	**SDAF3268K**	**A8978**	**ER 865-1**	**2700**
5 1/2	**19 1/4**	**2 1/4**	**23272K**	**SNP-3272 x 13 7/16**	**SDAF3272K**	**A8979**	**ER 979**	**3050**
4 3/8	**19 1/4**	**2 1/4**	**23276K**	**SNP-3276 x 13 15/16**	**SDAF3276K**	**A8980**	**ER 875-1**	**3000**
6	**21 3/4**	**2 1/4**	**23280K**	**SNP-3280 x 14 15/16**	**SDAF3280K**	**A8976**	**ER976**	**4650**
6 3/8	**22 1/4**	**2 1/2**	**23284K**	**SNP-3284 x 15 3/4**	**SDAF3284K**	**A8990**	**ER 969-1**	**4900**
5 7/8	**22 1/4**	**2 1/2**	**23288K**	**SNP-3288 x 16 1/2**	**SDAF3288K**	**A8988**	**ER 958-1**	**5200**

[1]Bold shaft sizes are standard. When ordering non-standard pillow block assemblies, specify shaft size.
[2]See page D-76, table D-20 for suggested shaft diameter S-1 tolerances.
[3]Includes sleeve, locknut and lockwasher. Add shaft size to order.
[4]Housing Only includes cap, base, cap bolts, triple-ring seals and stabilizing ring as required. When ordering non-standard housing only specify the shaft size.
[5]Stabilizing ring used for fixed (FX) block; do not use for float (FL) mounting.
NOTE: Speed ratings are found in the dimension tables on pages D-37 through D-43.

INCH STRAIGHT BORE MOUNTING SAF222 AND SAF223 SERIES

- Each assembly includes the housing cap and base, cap bolts, bearing, locknut and lockwasher, stabilizing ring and triple-ring seals.
- To order pillow block housing only, use the numbers listed in Housing Only column. These units include cap and base, cap bolts, triple-ring seals and stabilizing ring.
- Assembly and pillow blocks described on this page constitute fixed units.
- To order float units, specify part number plus suffix float or FL.
- All assemblies shown are furnished in cast iron. If cast steel is desired, add the letter S to the alpha prefix (e.g., SAFS 22217).
- Four-bolt bases are standard on all assemblies, unless noted.

Pillow Block Assembly	Shaft Dia.[1]		A	B	C	D	E		F	H	K	L	Y	Base Bolts Required	
	S-2	S-3					Max.	Min.			Oil Level			No.	Size
	in.	in.	in.	in.	in.	in.	in.	in.	in.	in.	in.	in.	in.		in.
SERIES SAF222															
SAF22217	3 15/16	3 3/16	3 3/4	13	3 1/2	1 1/4	11	9 7/8	–	7 1/4	1 7/16	4 15/16	1 27/64	2	3/4
FSAF22217	3 15/16	3 3/16	3 3/4	13	3 1/2	1 1/4	11	9 7/8	2 1/8	7 1/4	1 7/16	4 15/16	1 27/64	4	5/8
SAF22218	4 1/8	3 3/8	4	13 3/4	3 7/8	1 1/2	11 5/8	10 3/8	–	7 3/4	1 17/32	6 1/4	1 37/64	2	3/4
FSAF22218	4 1/8	3 3/8	4	13 3/4	3 7/8	1 1/2	11 5/8	10 3/8	2 1/8	7 3/4	1 17/32	6 1/4	1 37/64	4	5/8
SAF22220	4 1/2	3 13/16	4 1/2	15 1/4	4 3/8	1 3/4	13 1/8	11 5/8	–	8 11/16	1 3/4	6	1 49/64	2	7/8
FSAF22220	4 1/2	3 13/16	4 1/2	15 1/4	4 3/8	1 3/4	13 1/8	11 5/8	2 3/8	8 11/16	1 3/4	6	1 49/64	4	3/4
SAF22222	4 7/8	4 3/16	4 15/16	16 1/2	4 3/4	2	14 1/2	12 5/8	2 3/4	9 9/16	1 7/8	6 3/8	1 61/64	4	3/4
SAF22224	5 5/16	4 9/16	5 1/4	16 1/2	4 3/4	2 1/8	14 1/2	13 1/4	2 3/4	10 1/4	1 15/16	7 3/8	2 3/32	4	3/4
SAF22226	5 7/8	4 15/16	6	18 3/8	5 1/8	2 3/8	16	14 5/8	3 1/4	11 9/16	2 7/16	8	2 17/64	4	7/8
SAF22228	6 1/4	5 5/16	6	20 1/8	5 7/8	2 3/8	17 1/8	16	3 3/8	11 3/4	2 1/8	7 3/4	2 13/32	4	1
SAF22230	6 5/8	5 3/4	6 5/16	21 1/4	6 1/4	2 1/2	18 1/4	17	3 3/4	12 1/2	2 3/16	8 3/8	2 37/64	4	1
SAF22232	7	6 1/16	6 11/16	22	6 1/4	2 5/8	19 1/4	17 3/8	3 3/4	13 5/16	2 3/16	8 3/4	2 49/64	4	1
SAF22234	7 7/16	6 7/16	7 1/16	24 3/4	6 3/4	2 3/4	21 5/8	19 3/8	4 1/4	14 9/16	2 5/16	9 3/8	2 59/64	4	1
SAF22236	7 13/16	6 7/8	7 1/2	26 3/4	7 1/8	3	23 5/8	20 7/8	4 5/8	15 1/2	2 9/16	9 11/16	2 61/64	4	1
SAF22238	8 3/8	7 1/4	7 7/8	28	7 1/2	3 1/8	24 3/8	21 5/8	4 1/2	15 11/16	2 5/8	10 3/4	3 7/64	4	1 1/4
SAF22240	8 3/4	7 5/8	8 1/4	29 1/2	8	3 3/8	25	22 1/2	5	17 3/16	2 11/16	10 13/16	3 9/32	4	1 1/4
SAF22244	9 9/16	8 5/16	9 1/2	32 3/4	8 3/4	3 3/4	27 7/8	24 3/4	5 1/4	19 5/8	3 3/8	11 1/2	3 17/32	4	1 1/2
SERIES SAF223															
SAF22317	3 15/16	3 3/16	4 1/2	15 1/4	4 3/8	1 3/4	13 1/8	11 5/8	–	8 11/16	1 13/16	6	1 57/64	2	7/8
FSAF22317	3 15/16	3 3/16	4 1/2	15 1/4	4 3/8	1 3/4	13 1/8	11 5/8	2 3/8	8 11/16	1 13/16	6	1 57/64	4	3/4
SAF22318	4 1/8	3 3/8	4 3/4	15 1/2	4 3/8	2	13 1/2	12	2 1/4	9 3/16	2	7	2 3/64	4	3/4
SAF22320	4 1/2	3 13/16	5 1/4	16 1/2	4 3/4	2 1/8	14 1/2	13 1/4	2 3/4	10 1/4	2 1/8	7 3/8	2 19/64	4	3/4
SAF22322	4 7/8	4 3/16	6	18 3/8	5 1/8	2 3/8	16	14 5/8	3 1/4	11 9/16	2 1/2	8	2 31/64	4	7/8
SAF22324	5 5/16	4 9/16	6 5/16	21 1/4	6 1/4	2 1/2	18 1/4	17	3 3/4	12 1/2	2 9/16	8 3/8	2 41/64	4	1
SAF22326	5 7/8	4 15/16	6 11/16	22	6 1/4	2 5/8	19 1/4	17 3/8	3 3/4	13 15/16	2 5/8	8 3/4	2 27/32	4	1
SAF22328	6 1/4	5 5/16	7 1/16	24 3/4	6 3/4	2 3/4	21 5/8	19 3/8	4 1/4	14 9/16	2 11/16	9 3/8	3 5/64	4	1
SAF22330	6 5/8	5 3/4	7 1/2	26 3/4	7 1/8	3	23 5/8	20 7/8	4 5/8	15 1/2	2 7/8	9 11/16	3 17/64	4	1
SAF22332	7	6 1/16	7 7/8	28	7 1/2	3 1/8	24 3/8	21 5/8	4 1/2	15 11/16	2 15/16	10 3/4	3 7/16	4	1 1/4
SAF22334	7 7/16	6 7/16	8 1/4	29 1/2	8	3 3/8	25	22 1/2	5	17 3/16	3 1/16	10 13/16	3 19/32	4	1 1/4
SAF22336	7 13/16	6 7/8	8 7/8	31 1/4	8 1/4	3 1/2	26 5/8	24	5 1/4	18 1/2	3 3/8	11 1/4	3 47/64	4	1 1/4
SAF22338	8 3/8	7 1/4	9 1/2	32 3/4	8 3/4	3 3/4	27 7/8	24 3/4	5 1/4	19 5/8	3 11/16	11 1/2	3 57/64	4	1 1/2
SAF22340	8 3/4	7 5/8	9 7/8	34 1/4	9	4	29 1/2	26 1/4	5 1/2	20 3/16	3 3/4	12 1/4	4 5/64	4	1 1/2

[1]See page D-76, table D-20 for suggested shaft diameter S-2, S-3 tolerances.
[2]Housing Only includes cap, base, cap bolts, triple-ring seals and stabilizing rings as required.
[3]Stabilizing ring used for fixed (FX) block; do not use for float (FL) mounting.
[4]Triple-ring seals for other shaft diameters are available upon special order.
NOTE: Speed ratings are found in the dimension tables on pages D-37 through D-43.

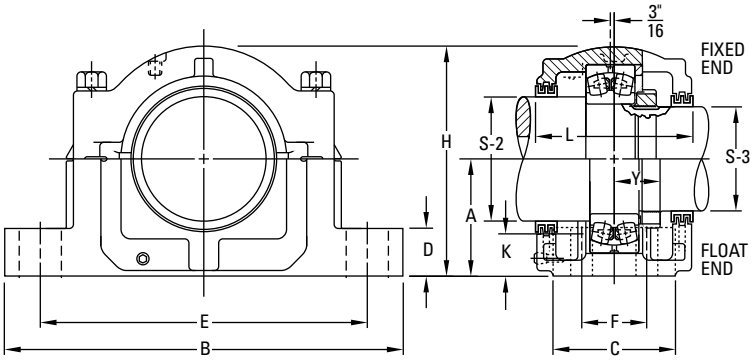

Bearing No.	Locknut	Lockwasher	Housing Only[2]	Stabilizing Ring 1 Req'd[3]	Triple Seal 1 Req'd[4]		Assembly Wt.
					S-2	S-3	
							lbs.
22217	AN17	W17	SAF217	SR-17-14	LER89	LER63	43
22217	AN17	W17	FSAF217	SR-17-14	LER89	LER63	43
22218	AN18	W18	SAF218	SR-18-15	LER96	LER72	50
22218	AN18	W18	FSAF218	SR-18-15	LER96	LER72	50
22220	AN20	W20	SAF220	SR-20-17	LER118	LER106	71
22220	AN20	W20	FSAF220	SR-20-17	LER118	LER106	71
22222	AN22	W22	SAF222	SR-22-19	LER121	LER113	81
22224	AN24	W24	SAF224	SR-24-20	LER127	LER119	90
22226	AN26	W26	SAF226	SR-26-0	LER136	LER122	127
22228	AN28	W28	SAF228	SR-28-0	LER144	LER127	149
22230	AN30	W30	SAF230	SR-30-0	LER151	LER134	175
22232	AN32	W32	SAF232	SR-32-0	LER156	LER142	210
22234	AN34	W34	SAF234	SR-34-0	LER161	LER148	280
22236	AN36	W36	SAF236	SR-36-30	LER165	LER154	305
22238	AN38	W38	SAF238	SR-38-32	LER171	LER160	350
22240	AN40	W40	SAF240	SR-40-34	LER175	LER164	420
22244	N44	W44	SAF244	SR-44-38	LER179	LER170	590
22317	AN17	W17	SAF317	SR-20-17	LER109	LER188	80
22317	AN17	W17	FSAF317	SR-20-17	LER109	LER188	80
22318	AN18	W18	SAF318	SR-21-18	LER112	LER191	92
22320	AN20	W20	SAF320	SR-24-20	LER118	LER106	109
22322	AN22	W22	SAF322	SR-0-22	LER121	LER113	145
22324	AN24	W24	SAF324	SR-0-24	LER127	LER119	195
22326	AN26	W26	SAF326	SR-0-26	LER136	LER122	235
22328	AN28	W28	SAF328	SR-0-28	LER144	LER127	300
22330	AN30	W30	SAF330	SR-36-30	LER151	LER134	335
22332	AN32	W32	SAF332	SR-38-32	LER156	LER142	405
22334	AN34	W34	SAF334	SR-40-34	LER161	LER148	465
22336	AN36	W36	SAF336	SR-0-36	LER165	LER154	525
22338	AN38	W38	SAF338	SR-44-38	LER171	LER160	635
22340	AN40	W40	SAF340	SR-0-40	LER175	LER164	700

[1]See page D-76, table D-20 for suggested shaft diameter S-2, S-3 tolerances.
[2]Housing Only includes cap, base, cap bolts, triple-ring seals and stabilizing rings as required.
[3]Stabilizing ring used for fixed (FX) block; do not use for float (FL) mounting.
[4]Triple-ring seals for other shaft diameters are available upon special order.
NOTE: Speed ratings are found in the dimension tables on pages D-37 through D-43.

INCH STRAIGHT BORE MOUNTING SDAF222 AND SDAF223 SERIES

- Each assembly includes the housing cap and base, cap bolts, bearing, locknut and washer, stabilizing ring, and triple-ring seals.
- To order pillow block housing only, use the numbers listed in the Housing Only column. These units include cap and base, cap bolts, triple-ring seals and stabilizing ring.
- Assembly and pillow blocks described on this page constitute fixed units.
- To order float units, specify part number plus suffix float or FL.
- All assemblies shown are furnished in cast iron. If cast steel is desired, add the letter S to the alpha prefix (e.g., SDAS 22220).

Pillow Block Assembly	Shaft Dia.[1]		A	B	C	D	E		F	H	K	L	Y	Base Bolts Required	
	S-2	S-3					Max.	Min.			Oil Level			No.	Size
	in.	in.	in.	in.	in.	in.	in.	in.	in.	in.	in.	in.	in.		in.
SERIES SDAF222															
SDAF22220	4 1/2	3 13/16	4 1/2	15 1/4	6	1 7/8	13 1/8	11 5/8	3 3/8	8 15/16	1 3/4	6 3/4	1 49/64	4	3/4
SDAF22222	4 7/8	4 3/16	4 15/16	16 1/2	6 3/4	2 1/8	14 1/2	12 5/8	4	9 7/8	1 7/8	7 1/4	1 61/64	4	7/8
SDAF22224	5 5/16	4 9/16	5 1/4	16 1/2	6 7/8	2 1/4	14 1/2	13 1/4	4 1/8	10 1/2	1 15/16	7 3/8	2 3/32	4	7/8
SDAF22226	5 7/8	4 15/16	6	18 3/8	7 1/2	2 3/8	16	14 5/8	4 1/2	11 7/8	2 7/16	8	2 17/64	4	1
SDAF22228	6 1/4	5 5/16	6	20 1/8	7 1/2	2 3/8	17 1/8	16	4 1/2	12 1/16	2 1/8	7 13/16	2 13/32	4	1
SDAF22230	6 5/8	5 3/4	6 5/16	21 1/4	7 7/8	2 1/2	18 1/4	17	4 3/4	12 13/16	2 3/16	8 3/8	2 37/64	4	1 1/8
SDAF22232	7	6 1/16	6 11/16	22	8 1/4	2 1/2	19 1/4	17 3/8	5	13 11/16	2 3/16	8 3/4	2 49/64	4	1 1/8
SDAF22234	7 7/16	6 7/16	7 1/16	24 3/4	9	2 1/2	21 5/8	19 3/8	5 1/2	14 1/4	2 5/16	9 5/8	2 59/64	4	1 1/4
SDAF22236	7 13/16	6 7/8	7 1/2	26 3/4	9 3/8	2 3/4	23 5/8	20 7/8	5 7/8	15 3/16	2 9/16	10	2 61/64	4	1 1/4
SDAF22238	8 3/8	7 1/4	7 7/8	27 5/8	10	3	23 1/2	21 1/2	6 1/4	16 1/4	2 5/8	10 5/8	3 7/64	4	1 3/8
SDAF22240	8 3/4	7 5/8	8 1/4	28 3/4	10 1/2	3 1/4	25	23	6 3/4	17 1/8	2 11/16	11 1/8	3 9/32	4	1 3/8
SDAF22244	9 9/16	8 5/16	9 1/2	32	11 1/4	3 1/2	27 7/8	25 5/8	7 1/4	19 1/4	3 3/8	11 7/8	3 17/32	4	1 1/2
SERIES SDAF223															
SDAF22317	3 15/16	3 3/16	4 1/2	15 1/4	6	1 7/8	13 1/8	11 5/8	3 3/8	8 15/16	1 3/16	6 3/4	1 57/64	4	3/4
SDAF22318	4 1/8	3 3/8	4 3/4	15 1/2	6 1/8	2	13 1/2	12	3 5/8	9 7/16	2	6 7/8	2 3/64	4	3/4
SDAF22320	4 1/2	3 13/16	5 1/4	16 1/2	6 7/8	2 1/4	14 1/2	13 1/4	4 1/8	10 1/2	2 1/8	7 3/8	2 19/64	4	7/8
SDAF22322	4 7/8	4 3/16	6	18 3/8	7 1/2	2 3/8	16	14 5/8	4 1/2	11 7/8	2 1/2	8	2 31/64	4	1
SDAF22324	5 5/16	4 9/16	6 5/16	21 1/4	7 7/8	2 1/2	18 1/4	17	4 3/4	12 13/16	2 9/16	8 3/8	2 41/64	4	1 1/8
SDAF22326	5 7/8	4 15/16	6 11/16	22	8 1/4	2 1/2	19 1/4	17 3/8	5	13 11/16	2 5/8	8 3/4	2 27/64	4	1 1/8
SDAF22328	6 1/4	5 5/16	7 1/16	24 3/4	9	2 1/2	21 5/8	19 3/8	5 1/2	14 1/4	2 11/16	9 5/8	3 5/64	4	1 1/4
SDAF22330	6 5/8	5 3/4	7 1/2	26 3/4	9 3/8	2 3/4	23 5/8	20 7/8	5 7/8	15 3/16	2 7/8	9 3/4	3 17/64	4	1 1/4
SDAF22332	7	6 1/16	7 7/8	27 5/8	10	3	23 1/2	21 1/2	6 1/4	16 1/4	2 15/16	10 5/8	3 7/16	4	1 3/8
SDAF22334	7 7/16	6 7/16	8 1/4	28 3/4	10 1/2	3 1/4	25	23	6 3/4	17 1/8	3 1/16	11 1/8	3 19/32	4	1 3/8
SDAF22336	7 13/16	6 7/8	8 7/8	30 1/2	10 3/4	3 1/4	26 3/8	24 1/8	6 7/8	17 15/16	3 3/8	11 3/8	3 47/64	4	1 1/2
SDAF22338	8 3/8	7 1/4	9 1/2	32	11 1/4	3 1/2	27 7/8	25 5/8	7 1/4	19 1/4	3 11/16	11 13/16	3 57/64	4	1 1/2
SDAF22340	8 3/4	7 5/8	9 7/8	33 1/2	11 3/4	3 1/2	29 1/4	26 5/8	7 5/8	19 15/16	3 3/4	12 1/4	4 5/64	4	1 5/8

[1]See page D-76, table D-20 for suggested shaft diameter S-2, S-3 tolerances.
[2]Housing Only includes cap, base, cap bolts, triple-ring seals and stabilizing rings as required.
[3]Stabilizing ring used for fixed (FX) block; do not use for float (FL) mounting.
[4]Triple-ring seals for other shaft diameters are available upon special order.
NOTE: Speed ratings are found in the dimension tables on pages D-37 through D-43.

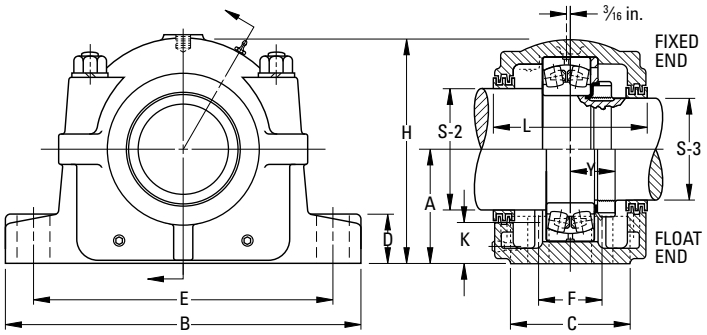

Bearing No.	Locknut	Lockwasher	Housing Only[2]	Stabilizing Ring 1 Req'd[3]	Triple Seal 1 Req'd[4]		Assembly Wt.
					S-2	S-3	
							lbs.
22220	AN20	W20	SDAF220	SR-20-17	LER118	LER106	81
22222	AN22	W22	SDAF222	SR-22-19	LER121	LER113	109
22224	AN24	W24	SDAF224	SR-24-20	LER127	LER119	113
22226	AN26	W26	SDAF226	SR-26-0	LER136	LER122	151
22228	AN28	W28	SDAF228	SR-28-0	LER144	LER127	175
22230	AN30	W30	SDAF230	SR-30-0	LER151	LER134	201
22232	AN32	W32	SDAF232	SR-32-0	LER156	LER142	245
22234	AN34	W34	SDAF234	SR-34-0	LER161	LER148	300
22236	AN36	W36	SDAF236	SR-36-30	LER165	LER154	335
22238	AN38	W38	SDAF238	SR-38-32	LER240	LER229	405
22240	AN40	W40	SDAF240	SR-40-34	LER244	LER233	465
22244	N44	W44	SDAF240	SR-44-38	LER248	LER239	650
22317	AN17	W17	SDAF317	SR-20-17	LER109	LER188	80
22318	AN18	W18	SDAF318	SR-21-18	LER112	LER191	92
22320	AN20	W20	SDAF320	SR-24-20	LER118	LER106	109
22322	AN22	W22	SDAF322	SR-0-22	LER121	LER113	145
22324	AN24	W24	SDAF324	SR-0-24	LER127	LER119	195
22326	AN26	W26	SDAF326	SR-0-26	LER136	LER122	280
22328	AN28	W28	SDAF328	SR-0-28	LER144	LER127	305
22330	AN30	W30	SDAF330	SR-36-30	LER151	LER134	375
22332	AN32	W32	SDAF332	SR-38-32	LER225	LER217	445
22334	AN34	W34	SDAF334	SR-40-34	LER230	LER220	525
22336	AN36	W36	SDAF336	SR-0-36	LER234	LER223	635
22338	AN38	W38	SDAF338	SR-44-38	LER240	LER229	700
22340	AN40	W40	SDAF340	SR-0-40	LER244	LER233	725

[1]See page D-76, table D-20 for suggested shaft diameter S-2, S-3 tolerances.
[2]Housing Only includes cap, base, cap bolts, triple-ring seals and stabilizing rings as required.
[3]Stabilizing ring used for fixed (FX) block; do not use for float (FL) mounting.
[4]Triple-ring seals for other shaft diameters are available upon special order.
NOTE: Speed ratings are found in the dimension tables on pages D-37 through D-43.

INCH STRAIGHT BORE MOUNTING SDAF231 AND SDAF232 SERIES

- Each assembly includes the housing cap and base, cap bolts, bearing, locknut and washer, stabilizing ring and triple-ring seals.
- To order pillow block housing only, use the numbers listed in the Housing Only column. These units include cap and base, cap bolts, triple-ring seals and stabilizing ring.
- Assembly and pillow blocks described on this page constitute fixed units.
- To order float units, specify part number plus suffix float or FL.
- Assemblies shown are furnished in cast iron. If cast steel is desired, add the letter S to the alpha prefix. If ductile iron is desired, add the letter D to the alpha prefix (e.g., SAFS 22515 or SAFD 22515).
- For fixed applications, both stabilizing rings must be used. Do not use stabilizing rings for float mounting.

Pillow Block Assembly	Shaft Dia.[1]		A	B	C	D	E		F	H	K	L
	S-2	S-3					Max.	Min.			Oil Level	
	in.	in.	in.	in.	in.	in.	in.	in.	in.	in.	in.	in.
SERIES SDAF231												
SDAF23152	11 1/2	9 15/16	10 1/4	35	13 1/8	3 3/4	30 1/2	29	8 3/4	20 7/8	3 3/8	14 1/4
SDAF23156	12 1/2	10 3/4	12	38 1/4	14 3/4	3 3/8	33 1/2	32 3/4	9	23 7/16	4 3/4	15 7/8
SDAF23160	13	11 1/2	12	38 1/4	14 3/4	3 3/8	33 1/2	32 3/4	9	23 7/16	4 1/8	15 7/8
SDAF23164	14	12 1/4	12 13/16	41 3/4	15 3/4	4 1/2	36 1/2	35	10 1/2	25 3/4	4 3/8	16 3/4
SDAF23168	15	13	14	43 3/4	17 3/4	5	38 1/4	36 3/4	10 3/4	27 7/8	4 15/16	18 3/4
SDAF23172	16	13 3/4	14 1/2	46	17 1/8	5 1/4	40 3/4	39 1/4	11	28 7/8	5	18
SDAF23176	17	14 1/2	14 1/2	46	17 1/8	5 1/4	40 3/4	39 1/4	11	28 7/8	4 5/8	18
SDAF23180	17 1/2	15 1/4	15 1/2	48 3/4	18 3/4	5 1/2	43 1/2	41 3/4	12 1/4	30 1/2	5 1/8	19 3/4
SDAF23184	18 1/2	15 3/4	17	52	21	5 1/2	46 1/8	44 3/8	14 1/2	33 3/4	6	22 1/4
SDAF23188	19 1/2	17	17	52	21	5 1/2	46 1/8	44 3/8	14 1/2	33 3/4	5 9/16	22 1/4
SDAF23192	20	17 3/4	18	54 1/4	21 5/8	5 3/4	48 7/8	47 1/8	15	35 3/4	6	22 3/4
SERIES SDAF232												
SDAF23248	10 1/2	9 3/16	10 1/4	35	13 1/8	3 3/4	30 1/2	29	8 3/4	20 7/8	3 9/16	14 1/4
SDAF23252	11 1/2	9 15/16	12	38 1/4	14 3/4	3 3/8	33 1/2	32 3/4	9	23 7/16	4 3/4	15 7/8
SDAF23256	12 1/2	10 3/4	12	38 1/4	14 3/4	3 3/8	33 1/2	32 3/4	9	23 7/16	4 3/8	15 7/8
SDAF23260	13	11 1/2	12 13/16	41 3/4	15 3/4	4 1/2	36 1/2	35	10 1/2	25 3/4	4 1/2	16 3/4
SDAF23264	14	12 1/4	14	43 3/4	17 3/4	5	38 1/4	36 3/4	10 3/4	27 7/8	5 1/8	18 3/4
SDAF23268	15	13	14 1/2	46	17 1/8	5 1/4	40 3/4	39 1/4	11	28 7/8	5	18
SDAF23272	16	13 3/4	15 1/2	48 3/4	18 3/4	5 1/2	43 1/2	41 3/4	12 1/4	30 1/2	5 1/2	19 3/4
SDAF23276	17	14 1/2	15 1/2	48 3/4	18 3/4	5 1/2	43 1/2	41 3/4	12 1/4	30 1/2	4 3/8	19 3/4
SDAF23280	17 1/2	15 1/4	17	52	21	5 1/2	46 1/8	44 3/8	14 1/2	33 3/4	6	22 1/4
SDAF23284	18 1/2	15 3/4	18	54 1/2	21 5/8	5 3/4	48 7/8	47 1/8	15	35 3/4	6 3/8	22 3/4
SDAF23288	19 1/2	17	18	54 1/2	21 5/8	5 3/4	48 7/8	47 1/8	15	35 3/4	5 7/8	22 3/4

[1]See page D-76, table D-20 for suggested shaft diameter S-2, S-3 tolerances.
[2]Housing Only includes cap, base, cap bolts, triple-ring seals and stabilizing rings as required.
[3]Stabilizing ring used for fixed (FX) block; do not use for float (FL) mounting.
[4]Triple-ring seals for other shaft diameters are available upon special order.
NOTE: Speed ratings are found in the dimension tables on pages D-37 through D-43.

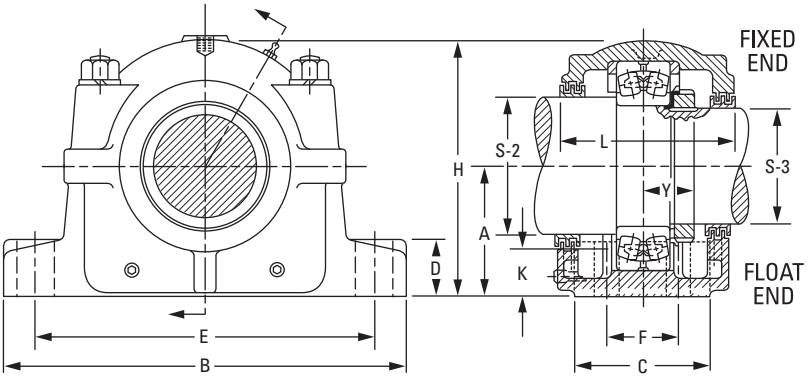

4 Base Bolts Req'd	Bearing No.	Locknut	Lockwasher	Housing Only[2]	Stabilizing Ring 1 Req'd[3]	Triple Seal 1 Req'd[4]		Assembly Wt.
						S-2	S-3	
in.								lbs.
1 5/8	23152	N052	P52	SDAF3152	A5679	ER832-1	ER751-1	1050
1 5/8	23156	N056	P56	SDAF3156	A8967	ER866-1	ER826	1250
1 5/8	23160	N060	P60	SDAF3160	A8975	ER846-1	ER832-1	1350
1 7/8	23164	N064	P64	SDAF3164	A8970	ER876-1	ER983-1	1850
2	23168	N068	P68	SDAF3168	A8977	ER847-1	ER846-1	2450
2	23172	N072	P72	SDAF3172	A8974	ER965-1	ER981	2500
2	23176	N076	P76	SDAF3176	A8978	ER838-1	ER984-1	2500
2 1/4	23180	N080	P80	SDAF3180	A8979	ER967	ER895-1	2800
2 1/4	23184	N084	P84	SDAF3184	A8984	ER978-1	ER969-1	4300
2 1/4	23188	N088	P88	SDAF3188	A8976	ER926-1	ER838-1	4300
2 1/2	23192	N092	P92	SDAF3192	A8990	ER808-1	ER906-1	5000
1 5/8	23248	N048	P48	SDAF3248	A5679	ER710-1	ER923-1	1100
1 5/8	23252	N052	P52	SDAF3252	A8968	ER832-1	ER751-1	1350
1 5/8	23256	N056	P56	SDAF3256	A8975	ER832-1	ER751-1	1400
1 7/8	23260	N060	P60	SDAF3260	A8970	ER846-1	ER832-1	1900
2	23264	N064	P64	SDAF3264	A8977	ER876-1	ER983-1	2500
2	23268	N068	P68	SDAF3268	A8978	ER847-1	ER846-1	2650
2 1/4	23272	N072	P72	SDAF3272	A8979	ER965-1	ER981	2950
2 1/4	23276	N076	P76	SDAF3276	A8980	ER838-1	ER984-1	3050
2 1/4	23280	N080	P80	SDAF3280	A8976	ER967	ER895-1	4500
2 1/2	23284	N084	P84	SDAF3284	A8990	ER978-1	ER969-1	5000
2 1/2	23288	N088	P88	SDAF3288	A8988	ER926-1	ER838-1	5050

[1]See page D-76, table D-20 for suggested shaft diameter S-2, S-3 tolerances.
[2]Housing Only includes cap, base, cap bolts, triple-ring seals and stabilizing rings as required.
[3]Stabilizing ring used for fixed (FX) block; do not use for float (FL) mounting.
[4]Triple-ring seals for other shaft diameters are available upon special order.
NOTE: Speed ratings are found in the dimension tables on pages D-37 through D-43.

INCH SHAFT DIAMETERS

TABLE D-20. SUGGESTED S-1, S-2, S-3 INCH SHAFT DIAMETERS

Diameter	Max.	Min.
1 7/16	1.4375	1.4345
1 11/16	1.6875	1.6845
1 7/8	1.8750	1.8720
1 15/16	1.9375	1.9345
2 1/16	2.0625	2.0585
2 1/8	2.1250	2.1210
2 3/16	2.1875	2.1835
2 1/4	2.2500	2.2460
2 3/8	2.3750	2.3710
2 7/16	2.4375	2.4335
2 9/16	2.5625	2.5585
2 5/8	2.6250	2.6210
2 11/16	2.6875	2.6835
2 13/16	2.8125	2.8085
2 7/8	2.8750	2.8710
2 15/16	2.9375	2.9335
3	3.0000	2.9960
3 1/16	3.0625	3.0585
3 3/16	3.1875	3.1835
3 1/4	3.2500	3.2460
3 3/8	3.3750	3.3710
3 7/16	3.4375	3.4335
3 5/8	3.6250	3.6210
3 15/16	3.9375	3.9335
4 1/8	4.1250	4.1200
4 3/16	4.1875	4.1825
4 7/16	4.4375	4.4325
4 1/2	4.5000	4.4950
4 9/16	4.5625	4.5575
4 7/8	4.8750	4.8700
4 15/16	4.9375	4.9325
5 3/16	5.1875	5.1825
5 5/16	5.3125	5.3075
5 7/16	5.4375	5.4325
5 3/4	5.7500	5.7450
5 7/8	5.8750	5.8700
5 15/16	5.9375	5.9325
6 1/16	6.0625	6.0575
6 1/4	6.2500	6.2450
6 7/16	6.4375	6.4325
6 5/8	6.6250	6.6200
6 7/8	6.8750	6.8700
6 15/16	6.9375	6.9325
7	7.0000	6.9950
7 3/16	7.1875	7.1825

Diameter	Max.	Min.
7 1/4	7.2500	7.2450
7 7/16	7.4375	7.4325
7 5/8	7.6250	7.6200
7 13/16	7.8125	7.8075
7 15/16	7.9375	7.9325
8 5/16	8.3125	8.3065
8 3/8	8.3750	8.3690
8 7/16	8.4375	8.4315
8 1/2	8.5000	8.4940
8 3/4	8.7500	8.7440
8 15/16	8.9375	8.9315
9	9.0000	8.9940
9 7/16	9.4375	9.4315
9 1/2	9.5000	9.4940
9 9/16	9.5625	9.5565
9 15/16	9.9375	9.9315
10	10.0000	9.9940
10 7/16	10.4375	10.4305
10 1/2	10.5000	10.4930
10 15/16	10.9375	10.9305
11	11.0000	10.9930
11 7/16	11.4375	11.4305
11 1/2	11.5000	11.4930
11 15/16	11.9375	11.9305
12	12.0000	11.9930
12 7/16	12.4375	12.4295
12 1/2	12.5000	12.4920
12 15/16	12.9375	12.9295
13	13.0000	12.9920
13 7/16	13.4375	13.4295
13 1/2	13.5000	13.4920
13 15/16	13.9375	13.9295
14	14.0000	13.9920
15	15.0000	14.9920
16	16.0000	15.9920
17	17.0000	16.9920
17 1/2	17.5000	17.4920
18 1/2	18.5000	18.4920
19 1/2	19.5000	19.4920
20	20.0000	19.9920

INCH TU TAKE-UP UNITS

- The same care taken in the selection of stationary pillow blocks also must be applied to selecting the proper take-up unit.
- Load requirements should be carefully evaluated before specifying a particular Timken take-up assembly.
- The pedestal is made of stress-relieved cast iron. End bases are made of ductile iron. The guide rail and screw are steel.
- Units are available with travel lengths from 12 to 36 in., in 6-in. increments.
- Catalog numbers shown here are for the TU take-up unit only; pillow block assemblies must be ordered separately.
- Both two- and four-bolt pedestals are available and must be specified.

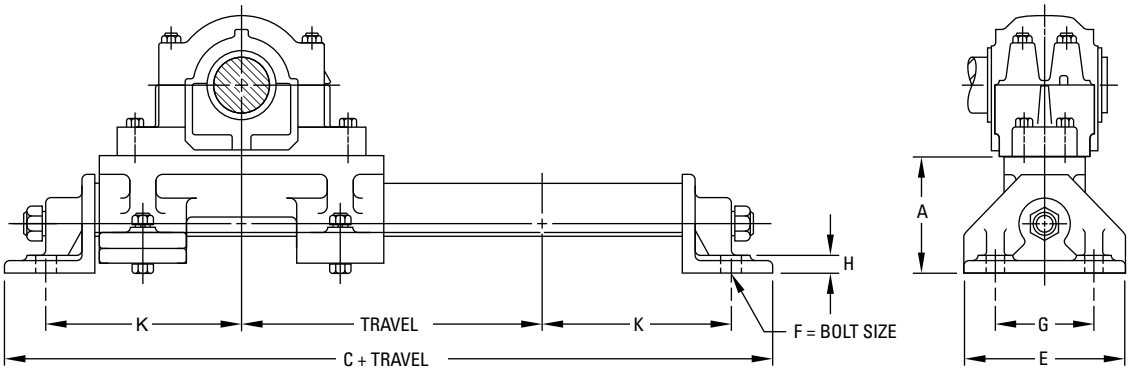

TU Take-Up Unit Catalog No.[1]	Pillow Block Housing No. (SAF or SDAF)			A	C	E	Bolt Size F	G	H	K
				in.	in.	in.	in.	in.	in.	in.
TU-3x	515L	–	–	4 7/8	20	6 1/2	5/8	4	3/4	8 1/4
TU-4x	516L	–	517L	5	21 3/4	6 1/2	3/4	4	3/4	9 1/8
TU-5x	518L	–	615L	5 1/4	23	7 1/2	3/4	5	3/4	9 3/4
TU-6x	520L	–	617L	5 1/2	24 3/4	7 1/2	3/4	5	7/8	10 3/4
TU-7x	522L	524L	620L	6	26	9	3/4	6 1/2	1	11 1/2
TU-8x	526L	–	622L	6	28	9	3/4	6 1/2	1	12 1/2
TU-8-1x	528L	–	–	6	29 1/2	9	3/4	6 1/2	1	13 1/4

[1]Enter 12, 18, 24, 30 or 36 to indicate travel in inches.

INCH TTU TAKE-UP UNITS

- The same care taken in the selection of stationary pillow blocks also must be applied to selecting the proper take-up unit.
- Load requirements should be carefully evaluated before specifying a particular take-up assembly.
- The frame assembly and adjusting screw of TTU units are made of steel.
- The bearing housing is cast iron. Steel or ductile iron housings are additional options.
- Units include housing for adapter-mounted bearings only, for either fixed or float position (be sure to specify).
- One stabilizing ring is included for fixed-position assemblies.
- Sealing is triple-ring labyrinth or end closures.
- For extremely contaminated environments, the DUSTAC seal is suggested. See page D-80 for more information.

Take-Up Unit and Frame No. (Travel in Bold)	Shaft Dia. S-1[1]	A	B	C	D	E	F	Bolt Size G	H	L	N	R	T
	in.	in.	in.	in.	in.	in.	in.	in.	in.	in.	in.	in.	
TTU-55-**12**	1 15/16	4 5/8	28 1/2	3 1/2	1 3/4	26 1/2	–	5/8	9	4	3/4	7 1/4	4
TTU-55-**18**		4 5/8	34 1/2	3 1/2	1 3/4	32 1/2	–	5/8	9	4	3/4	7 1/4	4
TTU-55-**24**		4 5/8	40 1/2	3 1/2	1 3/4	38 1/2	–	5/8	9	4	3/4	7 1/4	4
TTU-65-**12**	2 3/16	5	29 1/2	3 1/2	1 3/4	27 1/2	–	5/8	10	4 1/2	3/4	7 3/4	4
TTU-65-**18**		5	35 1/2	3 1/2	1 3/4	33 1/2	–	5/8	10	4 1/2	3/4	7 3/4	4
TTU-65-**24**		5	41 1/2	3 1/2	1 3/4	39 1/2	–	5/8	10	4 1/2	3/4	7 3/4	4
TTU-75-**6**	2 7/16	5 3/16	24 1/2	3 1/2	1 3/4	22 1/2	–	3/4	10 1/2	4 1/2	7/8	8 1/4	4
TTU-75-**12**		5 3/16	30 1/2	3 1/2	1 3/4	28 1/2	–	3/4	10 1/2	4 1/2	7/8	8 1/4	4
TTU-75-**18**		5 3/16	36 1/2	3 1/2	1 3/4	34 1/2	–	3/4	10 1/2	4 1/2	7/8	8 1/4	4
TTU-75-**24**		5 3/16	42 1/2	3 1/2	1 3/4	40 1/2	–	3/4	10 1/2	4 1/2	7/8	8 1/4	4
TTU-75-**30**		5 3/16	48 1/2	3 1/2	1 3/4	46 1/2	–	3/4	10 1/2	4 1/2	7/8	8 1/4	4
TTU-85-**6**	2 15/16	6	26 1/2	4 5/8	2	24 1/2	2	5/8	12 1/4	4 3/4	1	9 1/4	5
TTU-85-**12**		6	32 1/2	4 5/8	2	30 1/2	2	5/8	12 1/4	4 3/4	1	9 1/4	5
TTU-85-**18**		6	38 1/2	4 5/8	2	36 1/2	2	5/8	12 1/4	4 3/4	1	9 1/4	5
TTU-85-**24**		6	44 1/2	4 5/8	2	42 1/2	2	5/8	12 1/4	4 3/4	1	9 1/4	5
TTU-85-**30**		6	50 1/2	4 5/8	2	48 1/2	2	5/8	12 1/4	4 3/4	1	9 1/4	5
TTU-100-**12**	3 7/16	6 5/8	34 1/4	4 5/8	2	32	2	3/4	13 7/8	6	1 1/8	10	5 1/2
TTU-100-**18**		6 5/8	40 1/4	4 5/8	2	38	2	3/4	13 7/8	6	1 1/8	10	5 1/2
TTU-100-**24**		6 5/8	46 1/4	4 5/8	2	44	2	3/4	13 7/8	6	1 1/8	10	5 1/2
TTU-100-**30**		6 5/8	52 1/4	4 5/8	2	50	2	3/4	13 7/8	6	1 1/8	10	5 1/2
TTU-110-**12**	3 15/16	7 3/4	38 1/2	5 5/8	2 1/4	36	2 1/2	3/4	16 1/4	6 1/2	1 1/4	12	7
TTU-110-**18**		7 3/4	44 1/2	5 5/8	2 1/4	42	2 1/2	3/4	16 1/4	6 1/2	1 1/4	12	7
TTU-110-**24**		7 3/4	50 1/2	5 5/8	2 1/4	48	2 1/2	3/4	16 1/4	6 1/2	1 1/4	12	7
TTU-110-**30**		7 3/4	56 1/2	5 5/8	2 1/4	54	2 1/2	3/4	16 1/4	6 1/2	1 1/4	12	7
TTU-110-**36**		7 3/4	62 1/2	5 5/8	2 1/4	60	2 1/2	3/4	16 1/4	6 1/2	1 1/4	12	7
TTU-130-**12**	4 7/16	8 5/8	45 3/4	8 3/4	2 3/4	40 3/4	5	1 1/8	18 7/8	7 1/4	2	14 3/8	10
TTU-130-**18**		8 5/8	51 3/4	8 3/4	2 3/4	46 3/4	5	1 1/8	18 7/8	7 1/4	2	14 3/8	10
TTU-130-**24**		8 5/8	57 3/4	8 3/4	2 3/4	52 3/4	5	1 1/8	18 7/8	7 1/4	2	14 3/8	10
TTU-130-**30**		8 5/8	63 3/4	8 3/4	2 3/4	58 3/4	5	1 1/8	18 7/8	7 1/4	2	14 3/8	10
TTU-140-**12**	4 15/16	9 1/2	49 1/2	9 3/4	3	44 1/2	5 1/2	1 1/4	20 3/8	7 1/2	2 1/4	16 1/4	11
TTU-140-**18**		9 1/2	55 1/2	9 3/4	3	50 1/2	5 1/2	1 1/4	20 3/8	7 1/2	2 1/4	16 1/4	11
TTU-140-**24**		9 1/2	61 1/2	9 3/4	3	56 1/2	5 1/2	1 1/4	20 3/8	7 1/2	2 1/4	16 1/4	11
TTU-140-**30**		9 1/2	67 1/2	9 3/4	3	62 1/2	5 1/2	1 1/4	20 3/8	7 1/2	2 1/4	16 1/4	11

[1]See page D-76, table D-20 for suggested shaft diameter S-2, S-3 tolerances.
[2]Includes sleeve, locknut and lockwasher. Add shaft size to order.
[3]Stabilizing ring is used for fixed (FX) block; do not use for float (FL) mounting.
NOTE: Speed ratings are found in dimension tables on pages D-37 through D-43.

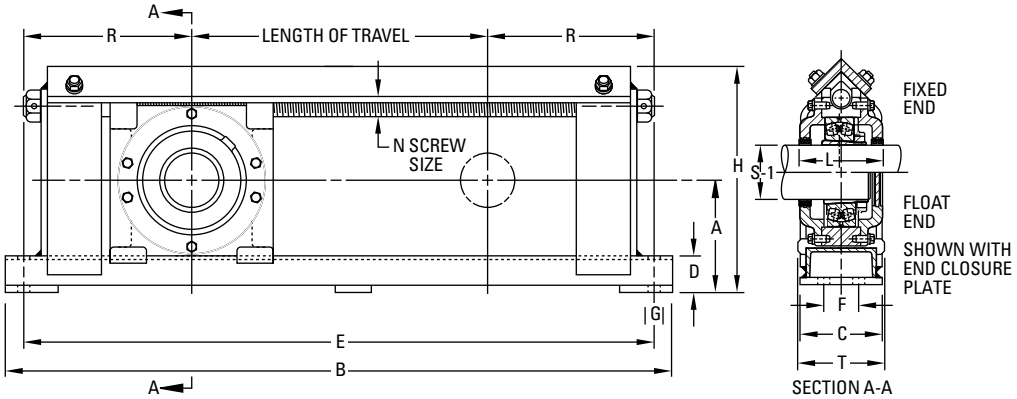

Bearing No.	Adapter Assembly No.[2]	Stabilizing Ring 1 Req'd[3]	Triple Seal 2 Req'd	Approx. Wt.
				lbs.
22211K	SNW-11	SR-11-0	LER24	55
22211K	SNW-11	SR-11-0	LER24	60
22211K	SNW-11	SR-11-0	LER24	65
22213K	SNW-13	SR-13-0	LER29	60
22213K	SNW-13	SR-13-0	LER29	65
22213K	SNW-13	SR-13-0	LER29	70
22215K	SNW-15	SR-15-0	LER37	65
22215K	SNW-15	SR-15-0	LER37	70
22215K	SNW-15	SR-15-0	LER37	75
22215K	SNW-15	SR-15-0	LER37	80
22215K	SNW-15	SR-15-0	LER37	85
22217K	SNW-17	SR-17-14	LER53	95
22217K	SNW-17	SR-17-14	LER53	100
22217K	SNW-17	SR-17-14	LER53	105
22217K	SNW-17	SR-17-14	LER53	110
22217K	SNW-17	SR-17-14	LER53	115
22220K	SNW-20	SR-20-17	LER102	140
22220K	SNW-20	SR-20-17	LER102	145
22220K	SNW-20	SR-20-17	LER102	150
22220K	SNW-20	SR-20-17	LER102	155
22222K	SNW-22	SR-22-19	LER109	200
22222K	SNW-22	SR-22-19	LER109	210
22222K	SNW-22	SR-22-19	LER109	220
22222K	SNW-22	SR-22-19	LER109	230
22222K	SNW-22	SR-22-19	LER109	240
22226K	SNW-26	SR-26-0	LER117	360
22226K	SNW-26	SR-26-0	LER117	380
22226K	SNW-26	SR-26-0	LER117	400
22226K	SNW-26	SR-26-0	LER117	420
22228K	SNW-28	SR-28-0	LER122	460
22228K	SNW-28	SR-28-0	LER122	480
22228K	SNW-28	SR-28-0	LER122	510
22228K	SNW-28	SR-28-0	LER122	530

[1]See page D-76, table D-20 for suggested shaft diameter S-2, S-3 tolerances.
[2]Includes sleeve, locknut and lockwasher. Add shaft size to order.
[3]Stabilizing ring is used for fixed (FX) block; do not use for float (FL) mounting.
NOTE: Speed ratings are found in dimension tables on pages D-37 through D-43.

INCH DUSTAC™ SHAFT SEAL

- Suggested for pillow blocks used in extremely contaminated environments, such as taconite mines.
- Provides protection against residual and airborne contaminants better than the triple-labyrinth shaft seal.
- Contributes significantly to extending service bearing life; reduces costs by helping prevent premature bearing damage.
- Because of its unique design, no special finish is required on the shaft. DUSTAC utilizes a V-shaped nitrile ring that rotates with the shaft and applies pressure to the cartridge face to help exclude contaminates.

TABLE D-21.

Pillow Block Housing No. 500	600	Shaft Dia. S-1	Assembly Standout B	DUSTAC™ Seal Assembly	V-Ring Seal	O-Ring	End Plug
515	615	2 7/16	59/64	DV-37	V-60-A	2-228	EPS-4
516	616	2 11/16	59/64	DV-44	V-65-A	2-231	EPS-5
517	–	2 15/16	1	DV-53	V-75-A	2-230	EPS-6
518	–	3 3/16	1	DV-69	V-80-A	2-235	EPS-9
520	620	3 7/16	1	DV-102	V-85-A	2-234	EPS-11
522	622	3 15/16	1	DV-109	V-100-A	2-239	EPS-13
524	624	4 3/16	1 1/16	DV-113	V-110-A	2-238	EPS-14
526	626	4 7/16	1 1/16	DV-117	V-110-A	2-242	EPS-15
528	628	4 15/16	1 1/16	DV-122	V-130-A	2-244	EPS-16
530	630	5 3/16	1 1/16	DV-125	V-130-A	2-247	EPS-17
532	632	5 7/16	1 1/16	DV-130	V-140-A	2-249	EPS-18
534	634	5 15/16	1 1/16	DV-140	V-150-A	2-253	EPS-20
536	636	6 7/16	1 9/64	DV-148	V-160-A	2-259	EPS-21
538	638	6 15/16	1 9/64	DV-155	V-180-A	2-259	EPS-22
540	640	7 3/16	1 9/64	DV-159	V-180-A	2-259	EPS-23
544	–	7 15/16	1 15/32	DV-167	V-200-A	2-262	EPS-25

ORDER INSTRUCTIONS

- Shaft seal may be ordered in place of the standard LER triple-ring seals supplied with the pillow blocks listed. They also are available to retrofit existing installations.
- To order any pillow block housings with DUSTAC shaft seal on both sides, add the suffix DV to the number (e.g., SAF2522DV).
- To order pillow block housings with DUSTAC shaft seal and one end closed, add the suffix DC to the number (e.g., SAF22522DC).
- Standard sizes of DUSTAC shaft seals are shown in the table. Other sizes are available upon request.

INSTALLATION PROCEDURE

1. Check shaft diameters to print specification. Remove any burrs or sharp edges. Be sure that the shaft surface is clean and dry beyond the area of seal location.
2. Expand the V-ring seal over the shaft to the approximate inboard position (reference dimension B in the tables). *Make sure the lip of the seal faces the bearing.*
3. Slide the seal cartridge onto the shaft until the V-ring fits into its cavity.
4. Mount the bearing, sleeve, lockwasher and locknut in a normal manner and adjust for internal clearance.
5. If both ends have seals, repeat steps 2 and 3 with the V-ring going on last with its lip facing the bearing.
6. Thoroughly clean the housing base and remove any paint or burrs from the mating surfaces of the housing cap.
7. Lower shaft, bearing and seals into the housing base, taking care to guide the seals into the seal grooves.
8. On each shaft, there must be only one fixed bearing. If the bearing is to be fixed, the stabilizing ring can be inserted between the bearing outer ring and the housing shoulder on the locknut side of the bearing. All other bearings on this shaft should be centered in the housing.
9. The upper half of the housing or cap should be thoroughly cleaned and checked for burrs. Place it over the bearing and seals. The dowel pins will align the cap to the base.
10. After the cap bolts are tightened, it is most important to position the V-ring seal to its proper fitted width. This is accomplished by moving the seal until it is flush with the outside face of the cavity. This provides proper compression of the lip against the cartridge face.

NOTE

Housing caps and bases are not interchangeable.

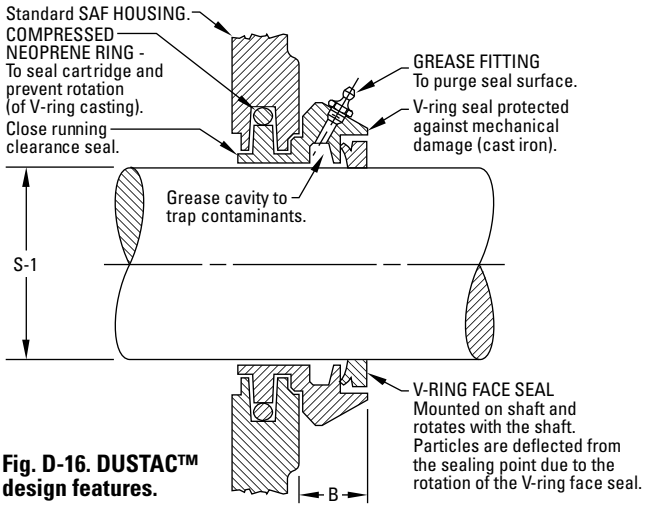

Fig. D-16. DUSTAC™ design features.

INCH SINE BAR GAGES

- Tapered-bore, antifriction bearings are mounted either on adapter sleeves or on tapered shaft seats.
- In cases where tapered bore bearings are mounted directly on the shaft, the shaft must conform to the tapered bore of the bearing to ensure a proper fit. If a proper fit is not achieved, the results could be:
  - Turning of the bearing inner race on the shaft.
  - Uneven loading of the bearing.
  - Severe inner race hoop stress.
  - Insufficient support (back-up) of the inner race on the shaft.
- All of these conditions could lead to premature bearing wear. Therefore, the manufacture, maintenance and measurement of accurate shaft tapers is important.
- There are two accepted ways of measuring tapered shafts: ring gages and sine bar gages.
- Precision measurement of tapered shafts is difficult with ring gages and may be impossible in the case of large shafts where gages are large, cumbersome and heavy.
- Sine bar gages provide an accurate and easy method of measurement.
- Lightweight, and easy to handle and use, sine bar gages achieve precise gaging of the shaft size and taper.
- A complete set for measurement of 1:12 shaft tapers consists of 3 in., 4 in., 5½ in., 7 in., 10 in. and 14 in. sine bar gages, sine bar saddle no. T-5491-C, web clamp no. T-5489-A and a wooden box no. T-5224-C. A complete set for 1:30 shaft tapers consists of 4 in., 6 in., 8 in. and 12 in. sine bar gages.
- Sine bars can be purchased individually or in any combination of sizes to meet your individual needs. Use tables D-22 and D-23 to select appropriate sine bar part number.
- All sine bars require a sine bar saddle and web clamp. A wooden box is optional.
- For information on the use of sine bars, prices and delivery, consult your Timken engineer.

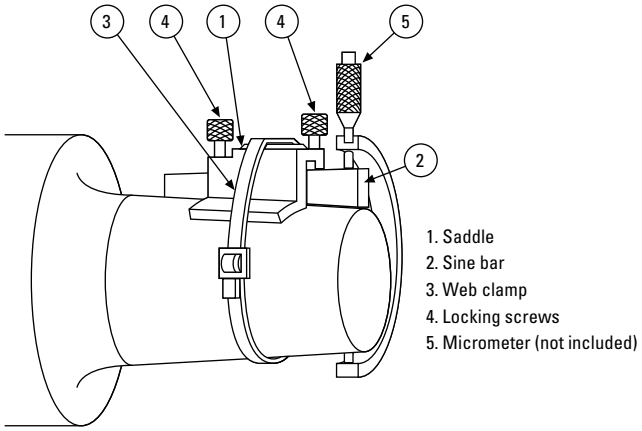

Fig. D-17. Parts of a sine gage.

TABLE D-22.

Part No.	Size	For Bearings
	in.	
T-3071-C	3.0000	22232K to 22240K
	3.0000	22322K to 22328K
	3.0000	23040K to 23048K
	3.0000	23130K to 23136K
	3.0000	23226K to 23230K
		23960K to 23972K
T-3072-C	4.0000	22248K to 22256K
	4.0000	22330K to 22340K
	4.0000	23052K to 23076K
	4.0000	23138K to 23148K
	4.0000	23232K to 23240K
		23976K to 239/560K
T-3073-C	5.5000	22260K to 22264K
	5.5000	23080K to 230/500K
	5.5000	23152K to 23164K
	5.5000	23244K to 23256K
		239/600K to 239/710K

NOTE: All sine bars require a sine bar saddle, T-5491-C, and a web clamp, T-5489-A.

TABLE D-23.

Part No.	Size	For Bearings
	in.	
T-3074-C	7.0000	230/530K to 230/750K
	7.0000	23168K to 23196K
	7.0000	23260K to 23276K
		239/750K to 239/1120K
T-3075-C	10.0000	230/800K to 230/1180
	10.0000	231/500K to 231/710K
	10.0000	23280K to 232/530K
		230/1250 and up
T-3076-C	14.0000	231/750K and up
	14.0000	232/560K and up
		239/118K and up
T-5476-C	4.0000	24040K to 24056K
	4.0000	24132K to 24144K
T-5477-C	6.0000	24060K to 24084K
	6.0000	24148K to 24160K
T-5478-C	8.0000	24089K to 240/630K
	8.0000	24164K to 24192K
T-5479-C	12.0000	240/670K and up
	12.0000	24196K and up

NOTE: The table above represents the sine bar sizes developed for a full range of tapered bore bearings with a 1:12 and a 1:30 taper. Additional sizes are available to fit a variety of width-and-taper combinations. Consult your local Timken engineer for availability.

SAF SPHERICAL ROLLER BEARING INCH ACCESSORIES

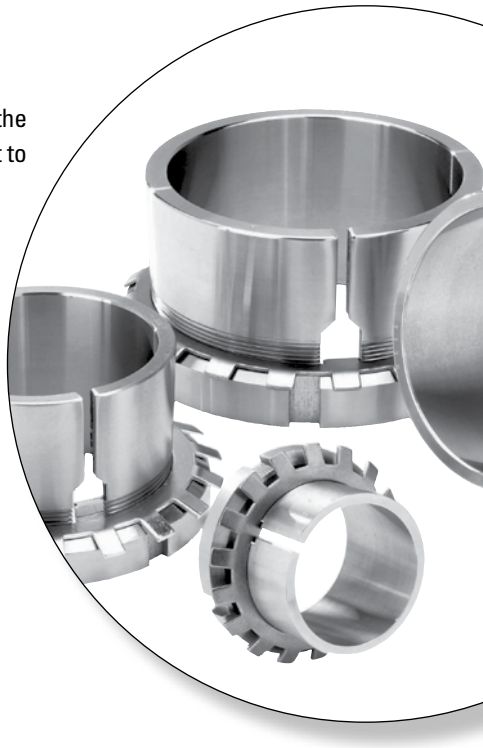

Spherical roller bearing accessories are manufactured to the same quality standards as our bearings, ensuring a secure fit to straight and stepped shafts.

- **Sizes**: Standard accessories for use with SAF assemblies are available in inch shaft sizes up to 1000 mm (40 in.). Accessories for metric shaft sizes also are available upon request.
- **Features**: Extensive product range, including hydraulic assist, for integration into a full range of industrial applications.
- **Benefits**: Supports full range of installation and removal needs, minimizing the chance for damage to the bearing.

NOMENCLATURE

Timken provides accessories for your every need. To complement our line of Timken® spherical roller bearings, we offer bearing sleeves and locking devices in a wide range of sizes. These accessories are manufactured to the same quality standards as our bearings, ensuring a secure fit to straight and stepped shafts. Available in sizes up to 1000 mm (39.3701 in.), bearing sleeves are available in two distinct designs: assembled adapter sleeves and withdrawal sleeves.

ADAPTER SLEEVES

Timken adapter sleeves are used in conjunction with a nut and locking device to mount a tapered bore bearing onto a straight shaft using a pull-type fit. Smaller size assemblies (20 mm [0.78 in.] - 200 mm [12 in.] shaft) commonly use simple nuts, whereas larger assemblies (sizes >200 mm [12 in.]) may use HMV hydraulic nuts to assist in mounting. Table D-24 outlines our part number nomenclature, which is consistent with world standards for adapter sleeves.

TABLE D-24. INCH ADAPTER SLEEVES (SNW, SNP) FOR INCH SHAFT SIZES ARE SUPPLIED WITH CORRESPONDING LOCKNUT AND LOCKING DEVICE

Assembly	Sleeve	Locknut	Locking Device
SNW	S	N, AN	W
SNP	S	N	P

NOTE: SNW assembly consists of a sleeve, locknut and lockwasher.
NOTE: SNP assembly consists of a sleeve, locknut and lockplate.
NOTE: Metric accessories are available. Please reference the Timken Spherical Roller Bearing Catalog (order no. 10446).

WITHDRAWAL SLEEVES

Withdrawal sleeves feature a push-type mounting arrangement and a locking device (i.e., locknut or lockplate) to secure a bearing to a shaft. This design is not as widely used as the adapter sleeve assembly, and it does require the use of a specially designed dismounting nut. Timken's part number nomenclature for withdrawal sleeves also conforms to industry-accepted standards. Nuts are not supplied with the withdrawal sleeve and must be ordered separately. The dismounting of large assemblies can be eased by using a hydraulic nut (HMV).

TABLE D-25. INCH WITHDRAWAL SLEEVE FOR INCH SHAFT SIZES

Sleeve	Locknut	Lockwasher/Plate	Dismounting Nut
SK	N, AN	W, P	AN, ARN, RN, N

LOCKING DEVICE

Timken offers a wide range of locknuts to locate bearing assemblies on application shafts. Sometimes referred to as shaft or withdrawal nuts, they are used to secure the assembly onto, and sometimes aid with the removal from the shaft.

LOCKWASHERS (W)

Locking washers are designed to secure the relative movement of a properly positioned locknut, so that a bearing and adapter sleeve remain tightly fitted to a shaft or a bearing remains secure against a shaft shoulder. The tab in the bore of the washer engages a keyway in the shaft or slot in the adapter sleeve. There are tabs on the O.D. of the washer that can be bent over into slots on the circumference of the locknut. Locking washers are used with locknuts with inch dimensions in the N and AN series.

LOCKPLATES (P)

Lockplates are bolted onto the outboard face of the locknut and fit into a keyway machined in the shaft or a slot in the adapter sleeve.

- P series are mounted on inch shafts sizes with N locknuts.

To learn more about our spherical roller bearing accessories, contact your Timken engineer. Standard suffixes and prefixes are found on page D-85.

INCH ACCESSORIES – PULL-TYPE SLEEVES

SNW/SNP – PULL-TYPE SLEEVE, LOCKNUT, LOCKWASHER/LOCKPLATE ASSEMBLIES

- The table below shows dimensions for adapter assemblies and components used in the mounting of tapered bore bearings on shafts.
- SNW assembly consists of a sleeve, locknut and lockwasher.
- SNP assembly consists of a sleeve, locknut and lockplate.

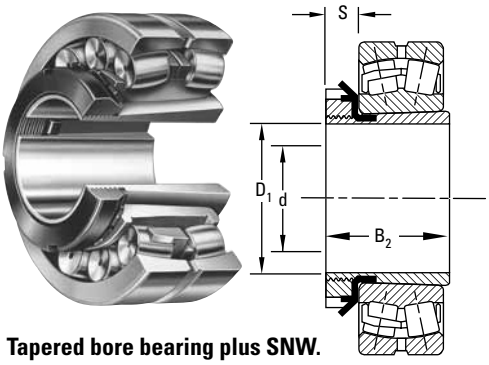

Tapered bore bearing plus SNW.

Bearing No.[1]	Accessory Numbers				Shaft Dimensions		Adapter Dimensions			SNW/SNP Assembly Wt.
	Assembly	Sleeve	Locknut	Lockwasher Lockplate	Diameter d	Tolerance[2]	B_2	S	D_1	
					in.	in.	in.	in.	in.	lbs.
SERIES 222K										
22207K	**SNW-07 x 1 3/16**	**S-07**	**N-07**	**W-07**	**1 3/16**	**-0.003**	**1 29/64**	**29/64**	**2 1/16**	**0.32**
22208K	**SNW-08 x 1 5/16**	**S-08**	**N-08**	**W-08**	**1 5/16**	**-0.003**	**1 21/32**	**29/64**	**2 1/4**	**0.42**
	SNW-09 x 1 3/8	S-09 x 1 3/8			1 3/8					
22209K	**SNW-09 x 1 7/16**	**S-09**	**N-09**	**W-09**	**1 7/16**	**-0.003**	**1 37/64**	**1/2**	**2 17/32**	**0.6**
	SNW-09 x 1 1/2	S-09 x 1 1/2			1 1/2					
	SNW-10 x 1 5/8	S-10 x 1 5/8			1 5/8					
22210K	**SNW-10 x 1 11/16**	**S-10**	**N-10**	**W-10**	**1 11/16**	**-0.003**	**1 49/64**	**9/16**	**2 11/16**	**0.7**
	SNW-10 x 1 3/4	S-10 x 1 3/4			1 3/4					
	SNW-11 x 1 7/8	S-11 x 1 7/8			1 7/8					
22211K	**SNW-11 x 1 15/16**	**S-11**	**N-11**	**W-11**	**1 15/16**	**-0.003**	**1 27/32**	**9/16**	**2 31/32**	**0.8**
	SNW-11 x 2	S-11 x 2			2					
22212K	**SNW-12 x 2 1/16**	**S-12**	**N-12**	**W-12**	**2 1/16**	**-0.004**	**1 63/64**	**19/32**	**3 5/32**	**1.1**
	SNW-13 x 2 1/8	S-13 x 2 1/8			2 1/8					
22213K	**SNW-13 x 2 3/16**	**S-13**	**N-13**	**W-13**	**2 3/16**	**-0.004**	**2 3/32**	**5/8**	**3 3/8**	**1.4**
	SNW-13 x 2 1/4	S-13 x 2 1/4			2 1/4					
22214K	**SNW-14 x 2 5/16**	**S-14**	**N-14**	**W-14**	**2 5/16**	**-0.004**	**2 11/64**	**5/8**	**3 5/8**	**1.8**
	SNW-15 x 2 3/8	S-15 x 2 3/8			2 3/8					
22215K	**SNW-15 x 2 7/16**	**S-15**	**AN-15**	**W-15**	**2 7/16**	**-0.004**	**2 19/64**	**43/64**	**3 7/8**	**2.0**
	SNW-15 x 2 1/2	S-15 x 2 1/2			2 1/2					
	SNW-16 x 2 5/8	S-16 x 2 5/8			2 5/8					
22216K	**SNW-16 x 2 11/16**	**S-16**	**AN-16**	**W-16**	**2 11/16**	**-0.004**	**2 3/8**	**43/64**	**4 5/32**	**2.4**
	SNW-16 x 2 3/4	S-16 x 2 3/4			2 3/4					
	SNW-17 x 2 13/16	S-17 x 2 13/16			2 13/16					
	SNW-17 x 2 7/8	S-17 x 2 7/8			2 7/8					
22217K	**SNW-17 x 2 15/16**	**S-17**	**AN-17**	**W-17**	**2 15/16**	**-0.004**	**2 31/64**	**45/64**	**4 13/32**	**3.0**
	SNW-17 x 3	S-17 x 3			3					
	SNW-18 x 3 1/16	S-18 x 3 1/16			3 1/16					
	SNW-18 x 3 1/8	S-18 x 3 1/8			3 1/8					
22218K	**SNW-18 x 3 3/16**	**S-18**	**AN-18**	**W-18**	**3 3/16**	**-0.004**	**2 41/64**	**25/32**	**4 21/32**	**3.0**
	SNW-18 x 3 1/4	S-18 x 3 1/4			3 1/4					
22219K	**SNW-19 x 3 5/16**	**S-19**	**AN-19**	**W-19**	**3 5/16**	**-0.004**	**2 49/64**	**13/16**	**4 15/16**	**3.3**
	SNW-20 x 3 3/8	S-20 x 3 3/8			3 3/8					

[1]Bold shaft sizes are standard. When ordering non-standard accessories, specify shaft size.
[2]Tolerance range is from +0 to value listed.

Continued on next page.

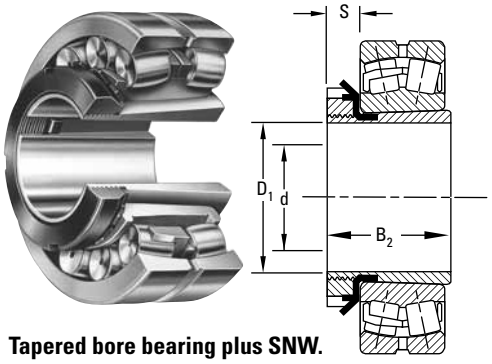

Tapered bore bearing plus SNW.

Continued from previous page.

Bearing No.[1]	Accessory Numbers				Shaft Dimensions		Adapter Dimensions			SNW/SNP Assembly Wt.
	Assembly	Sleeve	Locknut	Lockwasher Lockplate	Diameter d	Tolerance[2]	B_2	S	D_1	
					in.	in.	in.	in.	in.	lbs.
22220K	**SNW-20 x 3 7/16**	**S-20**	**AN-20**	**W-20**	**3 7/16**	**-0.004**	**2 7/8**	**27/32**	**5 3/16**	**4.4**
	SNW-20 x 3 1/2	S-20 x 3 1/2			3 1/2					
	SNW-22 x 3 13/16	S-22 x 3 13/16			3 13/16					
	SNW-22 x 3 7/8	S-22 x 3 7/8			3 7/8					
22222K	**SNW-22 x 3 15/16**	**S-22**	**AN-22**	**W-22**	**3 15/16**	**-0.004**	**3 13/64**	**29/32**	**5 23/32**	**5.0**
	SNW-22 x 4	S-22 x 4			4					
	SNW-24 x 4 1/16	S-22 x 4 1/16			4 1/16					
	SNW-24 x 4 1/8	S-22 x 4 1/8			4 1/8					
22224K	**SNW-24 x 4 3/16**	**S-24**	**AN-24**	**W-24**	**4 3/16**	**-0.005**	**3 15/32**	**15/16**	**6 1/8**	**6.7**
	SNW-24 x 4 1/4	S-24 x 4 1/4			4 1/4					
	SNW-26 x 4 5/16	S-26 x 4 5/16			4 5/16					
	SNW-26 x 4 3/8	S-26 x 4 3/8			4 3/8					
22226K	**SNW-26 x 4 7/16**	**S-26**	**AN-26**	**W-26**	**4 7/16**	**-0.005**	**3 49/64**	**1**	**6 3/4**	**8.6**
	SNW-26 x 4 1/2	S-26 x 4 1/2			4 1/2					
	SNW-28 x 4 13/16	S-28 x 4 13/16			4 13/16					
	SNW-28 x 4 7/8	S-28 x4 7/8			4 7/8					
22228K	**SNW-28 x 4 15/16**	**S-28**	**AN-28**	**W-28**	**4 15/16**	**-0.005**	**3 63/64**	**1 1/16**	**7 3/32**	**10.3**
	SNW-28 x 5	S-28 x 5			5					
	SNW-30 x 5 1/8	S-30 x 5 1/8			5 1/8					
22230K	**SNW-30 x 5 3/16**	**S-30**	**AN-30**	**W-30**	**5 3/16**	**-0.005**	**4 15/64**	**1 1/8**	**7 11/16**	**13.5**
	SNW-30 x 5 1/4	S-30 x 5 1/4			5 1/4					
	SNW-32 x 5 3/8	S-30 x 5 3/8			5 3/8					
22232K	**SNW-32 x 5 7/16**	**S-32**	**AN-32**	**W-32**	**5 7/16**	**-0.005**	**4 37/64**	**1 3/16**	**8 1/16**	**15.6**
	SNW-32 x 5 1/2	S-32 x 5 1/2			5 1/2					
	SNW-34 x 5 13/16	S-34 x 5 13/16			5 13/16					
	SNW-34 x 5 7/8	S-34 x 5 7/8			5 7/8					
22234K	**SNW-34 x 5 15/16**	**S-34**	**AN-34**	**W-34**	**5 15/16**	**-0.005**	**4 27/32**	**1 7/32**	**8 21/32**	**19.4**
	SNW-34 x 6	S-34 x 6			6					
	SNW-36 x 6 15/16	S-36 x 6 15/16			6 5/16					
	SNW-36 x 6 3/8	S-36 x 6 3/8			6 3/8					
22236K	**SNW-36 x 6 7/16**	**S-36**	**AN-36**	**W-36**	**6 7/16**	**-0.005**	**5 1/32**	**1 1/4**	**9 1/16**	**20.5**
	SNW-36 x 6 1/2	S-36 x 6 1/2			6 1/2					

[1]Bold shaft sizes are standard. When ordering non-standard accessories, specify shaft size.
[2]Tolerance range is from +0 to value listed.

Continued on next page.

INCH ACCESSORIES – PULL-TYPE SLEEVES – *continued*

SNW/SNP – PULL-TYPE SLEEVE, LOCKNUT, LOCKWASHER/LOCKPLATE ASSEMBLIES

- The table below shows dimensions for adapter assemblies and components used in the mounting of tapered bore bearings on shafts.
- SNW assembly consists of a sleeve, locknut and lockwasher.
- SNP assembly consists of a sleeve, locknut and lockplate.

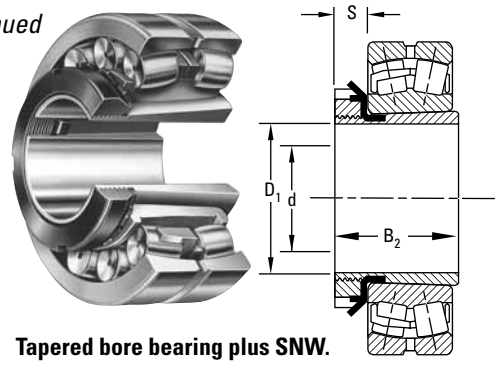

Tapered bore bearing plus SNW.

Continued from previous page.

Bearing No.[1]	Accessory Numbers				Shaft Dimensions		Adapter Dimensions			SNW/SNP Assembly Wt.
	Assembly	Sleeve	Locknut	Lockwasher Lockplate	Diameter d	Tolerance[2]	B_2	S	D_1	
					in.	in.	in.	in.	in.	lbs.
	SNW-38 x 6 13/16	S-38 x 6 13/16			6 13/16					
	SNW-38 x 6 7/8	S-38 x 6 7/8			6 7/8					
22238K	**SNW-38 x 6 15/16**	**S-38**	**AN-38**	**W-38**	**6 15/16**	**-0.005**	**5 17/64**	**1 9/32**	**9 15/32**	**23.4**
	SNW-38 x 7	S-38 x 7			7					
	SNW-40 x 7 1/8	S-40 x 7 1/8			7 1/8					
22240K	**SNW-40 x 7 3/16**	**S-40**	**AN-40**	**W-40**	**7 3/16**	**-0.005**	**5 31/64**	**1 11/32**	**9 27/32**	**30.5**
	SNW-40 x 7 1/4	S-40 x 7 1/4			7 1/4					
	SNW-44 x 7 13/16	S-44 x 7 13/16			7 13/16					
	SNW-44 x 7 7/8	S-44 x 7 7/8			7 7/8					
22244K	**SNW-44 x 7 15/16**	**S-44**	**N-044**	**W-44**	**7 15/16**	**-0.005**	**5 29/32**	**1 3/8**	**11**	**33.0**
	SNW-44 x 8	S-44 x 8			8					
22248K	**SNP-48 x 8 7/16**	**S-48**	**N-048**	**P-48**	**8 7/16**	**-0.006**	**6 5/8**	**1 23/64**	**11 7/16**	**37.5**
	SNP-48 x 8 15/16	S-48 x 8 15/16			8 15/16					
22252K	**SNP-52 x 9 7/16**	**S-52**	**N-052**	**P-52**	**9 7/16**	**-0.006**	**7 37/64**	**1 27/64**	**12 3/16**	**44.0**
SERIES 230K										
	SNW-3024 x 4 1/16	S-3024 x 4 1/16			4 1/16					
	SNW-3024 x 4 1/8	S-3024 x 4 1/8			4 1/8					
23024K	**SNW-3024 x 4 3/16**	**S-3024**	**N-024**	**W-024**	**4 3/16**	**-0.005**	**2 61/64**	**13/16**	**5 11/16**	**6.1**
	SNW-3024 x 4 1/4	S-3024 x 4 1/4			4 1/4					
	SNW-3026 x 4 5/16	S-3024 x 4 5/16			4 5/16					
	SNW-3026 x 4 3/8	S-3024 x 4 3/8			4 3/8					
23026K	**SNW-3026 x 4 7/16**	**S-3026**	**N-026**	**W-026**	**4 7/16**	**-0.005**	**3 15/64**	**7/8**	**6 1/8**	**7.5**
	SNW-3026 x 4 1/2	S-3026 x 4 1/2			4 1/2					
	SNW-3028 x 4 13/16	S-3028 x 4 13/16			4 13/16					
	SNW-3028 x 4 7/8	S-3028 x 4 7/8			4 7/8					
23028K	**SNW-3028 x 4 15/16**	**S-3028**	**N-028**	**W-028**	**4 15/16**	**-0.005**	**3 11/32**	**15/16**	**6 1/2**	**8.4**
	SNW-3030 x 5 1/8	S-3030 x 5 1/8			5 1/8					
23030K	**SNW-3030 x 5 3/16**	**S-3030**	**N-030**	**W-030**	**5 3/16**	**-0.005**	**3 31/64**	**31/32**	**7 1/8**	**9.8**
	SNW-3030 x 5 1/4	S-3030 x 5 1/4			5 1/4					
	SNW-3032 x 5 3/8	S-3032 x 5 3/8			5 3/8					
23032K	**SNW-3032 x 5 7/16**	**S-3032**	**N-032**	**W-032**	**5 7/16**	**-0.005**	**3 23/32**	**1 1/32**	**7 1/2**	**11.8**
	SNW-3032 x 5 1/2	S-3032 x 5 1/2			5 1/2					

[1]Bold shaft sizes are standard. When ordering non-standard accessories, specify shaft size.
[2]Tolerance range is from +0 to value listed.

Continued on next page.

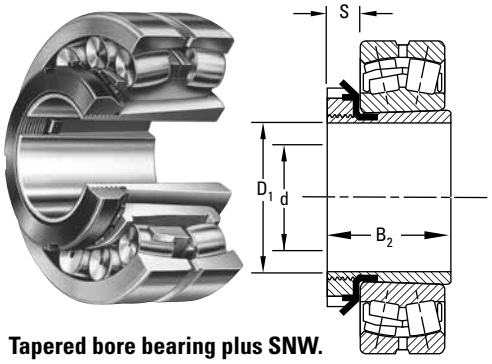

Tapered bore bearing plus SNW.

Continued from previous page.

Bearing No.[1]	Accessory Numbers				Shaft Dimensions		Adapter Dimensions			SNW/SNP Assembly Wt.
	Assembly	Sleeve	Locknut	Lockwasher Lockplate	Diameter d	Tolerance[2]	B_2	S	D_1	
					in.	in.	in.	in.	in.	lbs.
	SNW-3034 x 5 13/16	S-3034 x 5 13/16			5 13/16					
	SNW-3034 x 5 7/8	S-3034 x 5 7/8			5 7/8					
23034K	**SNW-3034 x 5 15/16**	**S-3034**	**N-034**	**W-034**	**5 15/16**	**-0.005**	**4 1/64**	**1 1/16**	**7 7/8**	**13.3**
	SNW-3034 x 6	S-3034 x 6			6					
	SNW-3036 x 6 5/16	S-3036 x 6 5/16			6 5/16					
	SNW-3036 x 6 3/8	S-3036 x 6 3/8			6 3/8					
23036K	**SNW-3036 x 6 7/16**	**S-3036**	**N-036**	**W-036**	**6 7/16**	**-0.005**	**4 11/32**	**1 3/32**	**8 1/4**	**15.2**
	SNW-3036 x 6 1/2	S-3036 x 6 1/2			6 1/2					
	SNW-3038 x 6 13/16	S-3038 x 6 13/16			6 13/16					
	SNW-3038 x 6 7/8	S-3038 x 6 7/8			6 7/8					
23038K	**SNW-3038 x 6 15/16**	**S-3038**	**N-038**	**W-038**	**6 15/16**	**-0.005**	**4 13/32**	**1 1/8**	**8 11/16**	**16.7**
	SNW-3038 x 7	S-3038 x 7			7					
	SNW-3040 x 7 1/8	S-3040 x 7 1/8			7 1/8					
23040K	**SNW-3040 x 7 3/16**	**S-3040**	**N-040**	**W-040**	**7 3/16**	**-0.005**	**4 3/4**	**1 3/16**	**9 7/16**	**19.7**
	SNW-3040 x 7 1/4	S-3040 x 7 1/4			7 1/4					
	SNW-3044 x 7 13/16	S-3044 x 7 13/16			7 13/16					
	SNW-3044 x 7 7/8	S-3044 x 7 7/8			7 7/8					
23044K	**SNW-3044 x 7 15/16**	**S-3044**	**N-044**	**W-044**	**7 15/16**	**-0.005**	**5 1/8**	**1 1/4**	**10 1/4**	**24.4**
	SNW-3044 x 8	S-3044 x 8			8					
	SNP-3048 x 8 7/16	S-3048 x 8 7/16			8 7/16					
	SNP-3048 x 8 1/2	S-3048 x 8 1/2			8 1/2					
23048K	**SNP-3048 x 8 15/16**	**S-3048**	**N-048**	**P-48**	**8 15/16**	**-0.006**	**5 7/16**	**1 11/32**	**11 7/16**	**32.2**
	SNP-3048 x 9	S-3048 x 9			9					
23052K	**SNP-3052 x 9 7/16**	**S-3052**	**N-052**	**P-52**	**9 7/16**	**-0.006**	**6 1/64**	**1 13/32**	**12 3/16**	**41.1**
	SNP-3052 x 9 1/2	S-3052 x 9 1/2			9 1/2					
	SNP-3056 x 9 15/16	S-3056 x 9 15/16			9 15/16					
	SNP-3056 x 10	S-3056 x 10			10					
23056K	**SNP-3056 x 10 7/16**	**S-3056**	**N-056**	**P-56**	**10 7/16**	**-0.007**	**6 3/16**	**1 1/2**	**13**	**45.4**
	SNP-3056 x 10 1/2	S-3056 x 10 1/2			10 1/2					
23060K	**SNP-3060 x 10 15/16**	**S-3060**	**N-060**	**P-60**	**10 15/16**	**-0.007**	**6 47/64**	**1 9/16**	**14 3/16**	**58.9**
	SNP-3060 x 11	S-3060 x 11			11					
	SNP-3064 x 11 7/16	S-3060 x 11 7/16			11 7/16					
	SNP-3064 x 11 1/2	S-3060 x 11 1/2			11 1/2					
23064K	**SNP-3064 x 11 15/16**	**S-3064**	**N-064**	**P-64**	**11 15/16**	**-0.007**	**6 61/64**	**1 21/32**	**15**	**65.7**
	SNP-3064 x 12	S-3064 x 12			12					

[1]Bold shaft sizes are standard. When ordering non-standard accessories, specify shaft size.
[2]Tolerance range is from +0 to value listed.

Continued on next page.

INCH ACCESSORIES – PULL-TYPE SLEEVES – *continued*

SNW/SNP – PULL-TYPE SLEEVE, LOCKNUT, LOCKWASHER/LOCKPLATE ASSEMBLIES

- The table below shows dimensions for adapter assemblies and components used in the mounting of tapered bore bearings on shafts.
- SNW assembly consists of a sleeve, locknut and lockwasher.
- SNP assembly consists of a sleeve, locknut and lockplate.

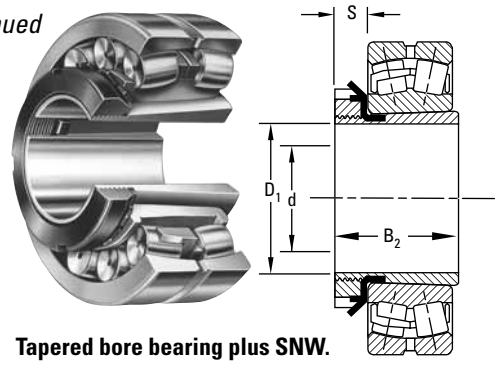

Tapered bore bearing plus SNW.

Continued from previous page.

Bearing No.[1]	Accessory Numbers				Shaft Dimensions		Adapter Dimensions			SNW/SNP Assembly Wt.
	Assembly	Sleeve	Locknut	Lockwasher Lockplate	Diameter d	Tolerance[2]	B_2	S	D_1	
					in.	in.	in.	in.	in.	lbs.
23068K	**SNP-3068 X 12 7/16**	**S-3068**	**N-068**	**P-68**	**12 7/16**	**-0.008**	**7 35/64**	**1 25/32**	**15 3/4**	**77.8**
	SNP-3068 X 12 1/2	S-3068 x 12 1/2			12 1/2					
	SNP-3072 X 12 15/16	S-3072 x 12 15/16			12 15/16					
	SNP-3072 X 13	S-3072 x 13			13					
23072K	**SNP-3072 X 13 7/16**	**S-3072**	**N-072**	**P-72**	**13 7/16**	**-0.008**	**7 37/64**	**1 25/32**	**16 1/2**	**86.2**
	SNP-3072 X 13 1/2	S-3072 x 13 1/2			13 1/2					
23076K	**SNP-3076 X 13 15/16**	**S-3076**	**N-076**	**P-76**	**13 15/16**	**-0.008**	**7 3/4**	**1 57/64**	**17 3/4**	**94.3**
	SNP-3076 X 14	S-3076 x 14			14					
23080K	**SNP-3080 x 15**	**S-3080**	**N-080**	**P-80**	**15**	**-0.008**	**8 13/32**	**2 1/16**	**18 1/2**	**100.0**
23084K	**SNP-3084 x 15 3/4**	**S-3084**	**N-084**	**P-84**	**15 3/4**	**-0.008**	**8 31/64**	**2 1/16**	**19 5/16**	**110.0**
23088K	**SNP-3088 x 16 1/2**	**S-3088**	**N-088**	**P-88**	**16 1/2**	**-0.008**	**9 7/64**	**2 3/8**	**20 1/2**	**144.0**
23092K	**SNP-3092 x 17**	**S-3092**	**N-092**	**P-92**	**17**	**-0.008**	**9 11/32**	**2 3/8**	**21 1/4**	**153.0**
23096K	**SNP-3096 x 18**	**S-3096**	**N-096**	**P-96**	**18**	**-0.008**	**9 29/64**	**2 3/8**	**22 1/16**	**162.0**
230/500K	**SNP-30/500 x 18 1/2**	**S-30/500**	**N-500**	**P-500**	**18 1/2**	**-0.008**	**9 27/32**	**2 45/64**	**22 13/16**	**180.0**
230/530K	**SNP-30/530 x 19 1/2**	**S-30/530**	**N-530**	**P-530**	**19 1/2**	**-0.008**	**10 37/64**	**2 45/64**	**24 13/16**	**221.0**
230/560K	**SNP-30/560 x 20 15/16**	**S-30/560**	**N-560**	**P-560**	**20 15/16**	**-0.008**	**11 7/32**	**2 61/64**	**25 9/16**	**243.0**
230/600K	**SNP-30/600 x 21 15/16**	**S-30/600**	**N-600**	**P-600**	**21 15/16**	**-0.008**	**11 29/64**	**2 61/64**	**27 9/16**	**322.0**
230/630K	**SNP-30/630 x 23 15/16**	**S-30/630**	**N-630**	**P-630**	**23 15/16**	**-0.008**	**11 59/64**	**2 61/64**	**28 3/4**	**350.0**
230/670K	**SNP-30/670 x 24 15/16**	**S-30/670**	**N-670**	**P-670**	**24 15/16**	**-0.008**	**12 27/32**	**3 9/64**	**30 11/16**	**421.0**
230/710K	**SNP-30/710 x 26 7/16**	**S-30/710**	**N-710**	**P-710**	**26 7/16**	**-0.008**	**13 1/2**	**3 37/64**	**32 11/16**	**492.0**
230/750K	**SNP-30/750 x 27 15/16**	**S-30/750**	**N-750**	**P-750**	**27 15/16**	**-0.008**	**14 3/32**	**3 37/64**	**34 1/4**	**536.0**
230/800K	**SNP-30/800 x 29 7/16**	**S-30/800**	**N-800**	**P-800**	**29 7/16**	**-0.008**	**14 13/32**	**3 37/64**	**36 1/4**	**662.0**
230/850K	**SNP-30/850 x 31 7/16**	**S-30/850**	**N-850**	**P-850**	**31 7/16**	**-0.008**	**15**	**3 37/64**	**38 9/16**	**747.0**
230/900K	**SNP-30/900 x 33 7/16**	**S-30/900**	**N-900**	**P-900**	**33 7/16**	**-0.008**	**15 11/16**	**3 61/64**	**40 9/16**	**853.0**
230/950K	**SNP-30/950 x 34 7/16**	**S-30/950**	**N-950**	**P-950**	**35 7/16**	**-0.008**	**16 1/2**	**3 61/64**	**43**	**935.0**

[1]Bold shaft sizes are standard. When ordering non-standard accessories, specify shaft size.
[2]Tolerance range is from +0 to value listed.

Continued on next page.

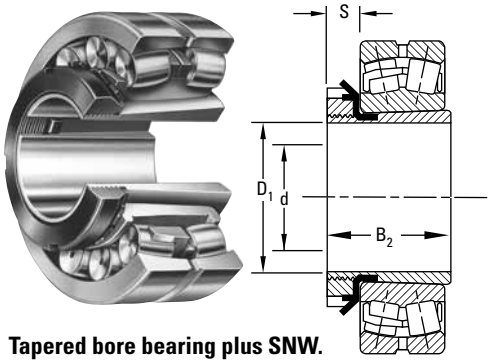

Tapered bore bearing plus SNW.

Continued from previous page.

Bearing No.[1]	Accessory Numbers				Shaft Dimensions		Adapter Dimensions			SNW/SNP Assembly Wt.
	Assembly	Sleeve	Locknut	Lockwasher Lockplate	Diameter d	Tolerance[2]	B_2	S	D_1	
					in.	in.	in.	in.	in.	lbs.
SERIES 223K AND 232K										
22308K	**SNW-108 x 1 5/16**	**S-108**	**N-08**	**W-08**	**1 5/16**	**-0.003**	**2 1/64**	**1/2**	**2 1/4**	**0.8**
22309K	**SNW-109 x 1 7/16**	**S-109**	**N-09**	**W-09**	**1 7/16**	**-0.003**	**2 9/64**	**1/2**	**2 17/32**	**0.8**
22310K	**SNW-110 x 1 11/16**	**S-110**	**N-10**	**W-10**	**1 11/16**	**-0.003**	**2 25/64**	**9/16**	**2 11/16**	**0.9**
22311K	**SNW-111 x 1 15/16**	**S-111**	**N-11**	**W-11**	**1 15/16**	**-0.003**	**2 33/64**	**9/16**	**2 31/32**	**0.9**
22312K	**SNW-112 x 2 1/16**	**S-112**	**N-12**	**W-12**	**2 1/16**	**-0.004**	**2 21/32**	**19/32**	**3 5/32**	**1.2**
22313K	**SNW-113 x 2 3/16**	**S-113**	**N-13**	**W-13**	**2 3/16**	**-0.004**	**2 49/64**	**5/8**	**3 3/8**	**1.7**
22314K	**SNW-114 x 2 5/16**	**S-114**	**N-14**	**W-14**	**2 5/16**	**-0.004**	**2 61/64**	**5/8**	**3 5/8**	**2.3**
	SNW-115 x 2 3/8	S-115 x 2 3/8			2 3/8					
22315K	**SNW-115 x 2 7/16**	**S-115**	**AN-15**	**W-15**	**2 7/16**	**-0.004**	**3 5/64**	**43/64**	**3 7/8**	**3.0**
	SNW-115 x 2 1/2	S-115 x 2 1/2			2 1/2					
	SNW-116 x 2 5/8	S-116 x 2 5/8			2 5/8					
22316K	**SNW-116 x 2 11/16**	**S-116**	**AN-16**	**W-16**	**2 11/16**	**-0.004**	**3 13/64**	**43/64**	**4 5/32**	**3.2**
	SNW-116 x 2 3/4	S-116 x 3/4			2 3/4					
	SNW-117 x 2 13/16	S-117 x 2 13/16			2 13/16					
	SNW-117 x 2 7/8	S-117 x 2 7/8			2 7/8					
22317K	**SNW-117 x 2 15/16**	**S-117**	**AN-17**	**W-17**	**2 15/16**	**-0.004**	**3 5/16**	**45/64**	**4 13/32**	**3.5**
	SNW-117 x 3	S-117 x 3			3					
	SNW-118 x 3 1/16	S-118 x 3 1/16			3 1/16					
	SNW-118 x 3 1/8	S-118 x 3 1/8			3 1/8					
22318K	**SNW-118 x 3 3/16**	**S-118**	**AN-18**	**W-18**	**3 3/16**	**-0.004**	**3 35/64**	**25/32**	**4 21/32**	**4.0**
	SNW-118 x 3 1/4	S-118 x 3 1/4			3 1/4					
22319K	**SNW-119 x 3 5/16**	**S-119**	**AN-19**	**W-19**	**3 5/16**	**-0.004**	**3 45/64**	**13/16**	**4 15/16**	**5.0**
	SNW-120 x 3 5/16	S-120 x 3 5/16			3 5/16					
	SNW-120 x 3 3/8	S-120 x 3 7/8			3 3/8					
22320K 23220K	**SNW-120 x 3 7/16**	**S-120**	**AN-20**	**W-20**	**3 7/16**	**-0.004**	**3 31/32**	**27/32**	**5 3/16**	**6.2**
	SNW-120 x 3 1/2	S-120 x 3 1/2			3 1/2					
	SNW-122 x 3 13/16	S-122 x 3 13/16			3 13/16					
	SNW-122 x 3 3/8	S-122 x 3 3/8			3 7/8					
22322K 23222K	**SNW-122 x 3 15/16**	**S-122**	**AN-22**	**W-22**	**3 15/16**	**-0.004**	**4 11/32**	**29/32**	**5 23/32**	**6.5**
	SNW-122 x 4	S-122 x 4			4					

[1]Bold shaft sizes are standard. When ordering non-standard accessories, specify shaft size.
[2]Tolerance range is from +0 to value listed.

Continued on next page.

INCH ACCESSORIES – PULL-TYPE SLEEVES – *continued*

SNW/SNP – PULL-TYPE SLEEVE, LOCKNUT, LOCKWASHER/LOCKPLATE ASSEMBLIES

- The table below shows dimensions for adapter assemblies and components used in the mounting of tapered bore bearings on shafts.
- SNW assembly consists of a sleeve, locknut and lockwasher.
- SNP assembly consists of a sleeve, locknut and lockplate.

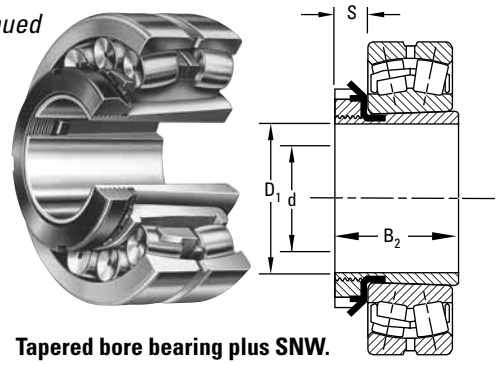

Tapered bore bearing plus SNW.

Continued from previous page.

Bearing No.[1]		Accessory Numbers				Shaft Dimensions		Adapter Dimensions			SNW/SNP Assembly Wt.
		Assembly	Sleeve	Locknut	Lockwasher Lockplate	Diameter d	Tolerance[2]	B_2	S	D_1	
						in.	in.	in.	in.	in.	lbs.
		SNW-124 x 4 1/16	S-124 x 4 1/16			4 1/16					
		SNW-124 x 4 1/8	S-124 x 4 1/8			4 1/8					
22324K	**23224K**	**SNW-124 x 4 3/16**	**S-124**	**AN-24**	**W-24**	**4 3/16**	**-0.005**	**4 41/64**	**15/16**	**6 1/8**	**8.0**
		SNW-124 x 4 1/4	S-124 x 4 1/4			4 1/4					
		SNW-126 x 4 5/16	S-126 x 4 5/16			4 5/16					
		SNW-126 x 4 3/8	S-126 4 3/8			4 3/8					
22326K	**23226K**	**SNW-126 x 4 7/16**	**S-126**	**AN-26**	**W-26**	**4 7/16**	**-0.005**	**4 63/64**	**1**	**6 3/4**	**12.4**
		SNW-126 x 4 1/2	S-126 x 4 1/2			4 1/2					
		SNW-126 x 4 9/16	S-126 x 4 9/16			4 9/16					
		SNW-128 x 4 13/16	S-128 x 4 13/16			4 13/16					
		SNW-128 x 4 7/8	S-128 x 4 7/8			4 7/8					
22328K	**23228K**	**SNW-128 x 4 15/16**	**S-128**	**AN-28**	**W-28**	**4 15/16**	**-0.005**	**5 21/64**	**1 1/16**	**7 3/32**	**13.0**
		SNW-128 x 5	S-128 x 5			5					
		SNW-130 x 5 1/8	S-130 x 5 1/8			5 1/8					
22330K	**23230K**	**SNW-130 x 5 3/16**	**S-130**	**AN-30**	**W-30**	**5 3/16**	**-0.005**	**5 5/8**	**1 1/8**	**7 11/16**	**17.6**
		SNW-130 x 5 1/4	S-130 x 5 1/4			5 1/4					
		SNW-130 x 5 5/16	S-130 x 5 5/16			5 5/16					
		SNW-130 x 5 3/8	S-130 x 5 3/8			5 3/8					
		SNW-132 x 5 3/8	S-132 x 5 3/8								
22332K	**23232K**	**SNW-132 x 5 7/16**	**S-132**	**AN-32**	**W-32**	**5 7/16**	**-0.005**	**5 59/64**	**1 3/16**	**8 1/16**	**18.5**
		SNW-132 x 5 1/2	S-132 x 5 1/2								
		SNW-134 x 5 13/16	S-134 x 5 13/16								
		SNW-134 x 5 7/8	S-134 x 5 7/8								
22334K	**23234K**	**SNW-134 x 5 15/16**	**S-134**	**AN-34**	**W-34**	**5 15/16**	**-0.005**	**6 3/16**	**1 7/32**	**8 21/32**	**21.0**
		SNW-134 x 6	S-134 x 6								
22336K	**23236K**	**SNW-136 x 6 7/16**	**S-136**	**AN-36**	**W-36**	**6 7/16**	**-0.005**	**6 29/64**	**1 1/4**	**9 1/16**	**22.5**
		SNW-138 x 6 13/16	S-138 x 6 13/16								
		SNW-138 x 6 7/8	S-138 x 6 7/8								
22338K	**23238K**	**SNW-138 x 6 15/16**	**S-138**	**AN-38**	**W-38**	**6 15/16**	**-0.005**	**6 3/4**	**1 9/32**	**9 15/32**	**28.0**
		SNW-138 x 7	S-138 x 7								
		SNW-140 x 7 1/8	S-140 x 7 1/8			7 1/8					
22340K	**23240K**	**SNW-140 x 7 3/16**	**S-140**	**AN-40**	**W-40**	**7 3/16**	**-0.005**	**7 3/32**	**1 11/32**	**9 27/32**	**36.0**
		SNW-140 x 7 1/4	S-140 x 7 1/4			7 1/4					

[1]Bold shaft sizes are standard. When ordering non-standard accessories, specify shaft size.
[2]Tolerance range is from +0 to value listed.

Continued on next page.

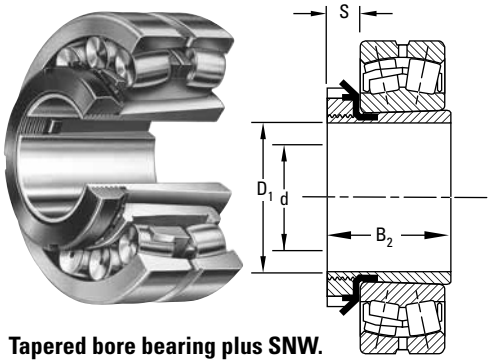

Tapered bore bearing plus SNW.

Continued from previous page.

Bearing No.[1]		Accessory Numbers				Shaft Dimensions		Adapter Dimensions			SNW/SNP Assembly Wt.
		Assembly	Sleeve	Locknut	Lockwasher Lockplate	Diameter d	Tolerance[2]	B_2	S	D_1	
						in.	in.	in.	in.	in.	lbs.
22344K	**23244K**	**SNW-144 x 7 15/16**	**S-144**	**N-044**	**W-44**	**7 15/16**	**-0.005**	**7 9/32**	**1 3/8**	**11**	**47.0**
22348K	**23248K**	**SNP-148 x 8 15/16**	**S-148**	**N-048**	**P-48**	**8 15/16**	**-0.006**	**8 7/64**	**1 11/32**	**11 7/16**	**38.3**
		SNP-148 x 9	S-148 x 9			9					
22352K	**23252K**	**SNP-152 x 9 7/16**	**S-152**	**N-052**	**P-52**	**9 7/16**	**-0.006**	**8 49/64**	**1 13/32**	**12 13/16**	**53.4**
		SNP-152 x 9 ½	S-152 x 9 ½			9 ½					
22356K	**23256K**	**SNP-3256 x 10 7/16**	**S-3256**	**N-056**	**P-56**	**10 7/16**	**-0.007**	**8 15/16**	**1 ½**	**13**	**61.3**
		SNP-3256 x 10 ½	S-3256 x 10 ½			10 ½	-0.007				
23260K		**SNP-3260 x 10 15/16**	**S-3260**	**N-060**	**P-60**	**10 15/16**	**-0.007**	**9 5/8**	**1 9/16**	**14 3/32**	**68.5**
		SNP-3260 x 11	S-3260 x 11			11	-0.007				
23264K		**SNP-3264 x 11 15/16**	**S-3264**	**N-064**	**P-64**	**11 15/16**	**-0.007**	**10 23/64**	**1 21/32**	**15**	**98.0**
		SNP-3264 x 12	S-3264 x 12			12	-0.007				
		SNP-3268 x 12 ½	S-3268 x 12 ½			12 ½	-0.007				
23268K		**SNP-3268 x 12 7/8**	**S-3268**	**N-068**	**P-68**	**12 7/8**	**-0.007**	**11 1/8**	**1 25/32**	**15 3/4**	**105.0**
23272K		**SNP-3272 x 13 7/16**	**S-3272**	**N-072**	**P-72**	**13 7/16**	**-0.007**	**11 27/64**	**1 25/32**	**16 ½**	**135.0**
		SNP-3272 x 13 ½	S-3272 x 13 ½			13 ½	-0.007				
23276K		**SNP-3276 x 13 15/16**	**S-3276**	**N-076**	**P-76**	**13 15/16**	**-0.007**	**11 7/8**	**1 29/32**	**17 3/4**	**145.0**
		SNP-3276 x 14	S-3276 x 14			14	-0.007				
23280K		**SNP-3280 x 15**	**S-3280**	**N-080**	**P-80**	**15**	**-0.007**	**12 21/32**	**2 1/16**	**18 ½**	**165.0**
23284K		**SNP-3284 x 15 3/4**	**S-3284**	**N-084**	**P-84**	**15 3/4**	**-0.007**	**13 19/64**	**2 1/16**	**19 5/16**	**170.0**
23288K		**SNP-3288 x 16 ½**	**S-3288**	**N-088**	**P-88**	**16 ½**	**-0.007**	**13 61/64**	**2 3/8**	**20 ½**	**260.0**
23292K		**SNP-3292 x 16 15/16**	**S-3292**	**N-092**	**P-92**	**16 15/16**	**-0.007**	**18 1/16**	**2 3/8**	**21 1/4**	**291.0**
23296K		**SNP-3296 x 17 15/16**	**S-3296**	**N-096**	**P-96**	**17 15/16**	**-0.007**	**15 5/32**	**2 3/8**	**22 1/16**	**335.0**
232/500K		**SNP-32/500 x 18 7/16**	**S-32/500**	**N-500**	**P-500**	**18 7/16**	**-0.007**	**16 ½**	**2 45/64**	**22 13/16**	**366.0**
232/530K		**SNP-32/530 x 18 15/16**	**S-32/530 x 18 15/16**	**N-530**	**P-530**	**18 15/16**	**-0.007**	**17 17/64**	**2 45/64**	**24 13/16**	**421.0**
		SNP-32/530 x 19 7/16	S-32/530 x 19 7/16			19 7/16	-0.007				
232/560K		**SNP-32/560 x 20 15/16**	**S-32/560**	**N-560**	**P-560**	**20 15/16**	**-0.007**	**17 59/64**	**2 61/64**	**25 9/16**	**478.0**
232/600K		**SNP-32/600 x 21 15/16**	**S-32/600**	**N-600**	**P-600**	**21 15/16**	**-0.007**	**18 55/64**	**2 61/64**	**27 9/16**	**613.0**
232/630K		**SNP-32/630 x 23 15/16**	**S-32/630**	**N-630**	**P-630**	**23 15/16**	**-0.007**	**19 51/64**	**2 61/64**	**28 3/4**	**657.0**
232/670K		**SNP-32/670 x 24 15/16**	**S-32/670**	**N-670**	**P-670**	**24 15/16**	**-0.007**	**21 1/32**	**3 9/64**	**30 11/16**	**891.0**
232/710K		**SNP-32/710 x 26 7/16**	**S-32/710**	**N-710**	**P-710**	**26 7/16**	**-0.007**	**21 15/16**	**3 37/64**	**32 11/16**	**979.0**
232/750K		**SNP-32/750 x 27 15/16**	**S-32/750**	**N-750**	**P-750**	**27 15/16**	**-0.007**	**22 63/64**	**3 37/64**	**34 1/4**	**1118.0**

[1]Bold shaft sizes are standard. When ordering non-standard accessories, specify shaft size.
[2]Tolerance range is from +0 to value listed.

Continued on next page.

INCH ACCESSORIES – PULL-TYPE SLEEVES – *continued*

SNW/SNP – PULL-TYPE SLEEVE, LOCKNUT, LOCKWASHER/LOCKPLATE ASSEMBLIES

- The table below shows dimensions for adapter assemblies and components used in the mounting of tapered bore bearings on shafts.
- SNW assembly consists of a sleeve, locknut and lockwasher.
- SNP assembly consists of a sleeve, locknut and lockplate.

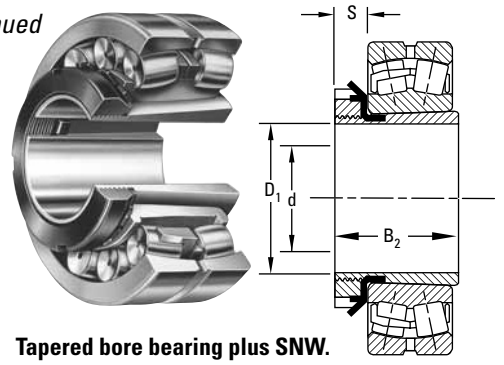

Tapered bore bearing plus SNW.

Continued from previous page.

Bearing No.[1]	Accessory Numbers				Shaft Dimensions		Adapter Dimensions			SNW/SNP Assembly Wt.
	Assembly	Sleeve	Locknut	Lockwasher Lockplate	Diameter d	Tolerance[2]	B_2	S	D_1	
					in.	in.	in.	in.	in.	lbs.
SERIES 231K										
23122K	**SNW-3122 x 3 15/16**	**S-22**	**N-022**	**W-022**	**3 15/16**	**-0.004**	**3 13/64**	**25/32**	**5 5/32**	**4.2**
23124K	**SNW-3124 x 4 3/16**	**S-24**	**N-024**	**W-024**	**4 3/16**	**-0.005**	**3 15/32**	**13/16**	**5 11/16**	**5.8**
23126K	**SNW-3126 x 4 7/16**	**S-26**	**N-026**	**W-026**	**4 7/16**	**-0.005**	**3 49/64**	**7/8**	**6 1/8**	**8.3**
23128K	**SNW-3128 x 4 15/16**	**S-28**	**N-028**	**W-028**	**4 15/16**	**-0.005**	**3 63/64**	**15/16**	**6 1/2**	**8.8**
23130K	**SNW-3130 x 5 3/16**	**S-30**	**N-030**	**W-030**	**5 3/16**	**-0.005**	**4 15/64**	**31/32**	**7 1/8**	**13.7**
23132K	**SNW-3132 x 5 7/16**	**S-32**	**N-032**	**W-032**	**5 7/16**	**-0.005**	**4 37/64**	**1 1/32**	**7 1/2**	**13.3**
23134K	**SNW-3134 x 5 15/16**	**S-34**	**N-034**	**W-034**	**5 15/16**	**-0.005**	**4 27/32**	**1 1/16**	**7 7/8**	**16.1**
23136K	**SNW-3136 x 6 7/16**	**S-36**	**N-036**	**W-036**	**6 7/16**	**-0.005**	**5 1/32**	**1 3/32**	**8 1/4**	**17.1**
23138K	**SNW-3138 x 6 15/16**	**S-38**	**N-038**	**W-038**	**6 15/16**	**-0.005**	**5 17/64**	**1 1/8**	**8 11/16**	**19.7**
23140K	**SNW-3140 x 7 3/16**	**S-40**	**N-040**	**W-040**	**7 3/16**	**-0.005**	**5 31/64**	**1 3/16**	**9 7/16**	**28.4**
23144K	**SNW-3144 x 7 15/16**	**S-44**	**N-044**	**W-044**	**7 15/16**	**-0.005**	**5 29/32**	**1 1/4**	**10 1/4**	**28.1**
23148K	**SNW-3144 x 8 15/16**	**S-48**	**N-048**	**P-48**	**8 15/16**	**-0.006**	**6 41/64**	**1 11/32**	**11 7/16**	**36.0**
23152K	**SNP-3152 x 9 7/16**	**S-52**	**N-052**	**P-52**	**9 7/16**	**-0.006**	**7 19/32**	**1 13/32**	**12 3/16**	**39.0**
	SNP-3152 x 9 1/2	S-52 x 9 1/2			9 1/2					
	SNP-3156 x 9 15/16	S-3156 x 9 15/16			9 15/16					
	SNP-3156 x 10	S-3156 x 10			10					
23156K	**SNP-3156 x 10 7/16**	**S-3156**	**N-056**	**P-56**	**10 7/16**	**-0.007**	**7 49/64**	**1 1/2**	**13**	**60.0**
	SNP-3156 x 10 1/2	S-3156 x 10 1/2			10 1/2					
23160K	**SNP-3160 x 10 15/16**	**S-3160**	**N-060**	**P-60**	**10 15/16**	**-0.007**	**8 3/8**	**1 9/16**	**14 3/16**	**65.0**
	SNP-3160 x 11	S-3160 x 11			11					
23164K	**SNP-3164 x 11 15/16**	**S-3164**	**N-064**	**P-64**	**11 15/16**	**-0.007**	**9 7/64**	**1 21/32**	**15**	**70.0**
	SNP-3164 x 12	S-3164 x 12			12					
	SNP-3168 x 12 1/2	S-3168 x 12 1/2			12 1/2					
23168K	**SNP-3168 x 12 7/8**	**S-3168**	**N-068**	**P-68**	**12 7/8**	**-0.007**	**9 25/32**	**1 25/32**	**15 3/4**	**93.5**
23172K	**SNP-3172 x 13 7/16**	**S-3172**	**N-072**	**P-72**	**13 7/16**	**-0.007**	**11 27/64**	**1 25/32**	**16 1/2**	**120.0**
	SNP-3172 x 13 1/2	S-3172 x 13 1/2			13 1/2					
23176K	**SNP-3176 x 13 15/16**	**S-3176**	**N-076**	**P-76**	**13 15/16**	**-0.007**	**11 7/8**	**1 29/32**	**17 3/4**	**125.0**
	SNP-3176 x 14	S-3176 x 14			14					
	SNP-3180 x 14 15/16	S-3180 x 14 15/16			14 15/16					
23180K	**SNP-3180 x 15**	**S-3180**	**N-080**	**P-80**	**15**	**-0.007**	**12 21/32**	**2 1/16**	**18 1/2**	**140.0**

[1]Bold shaft sizes are standard. When ordering non-standard accessories, specify shaft size.
[2]Tolerance range is from +0 to value listed.

Continued on next page.

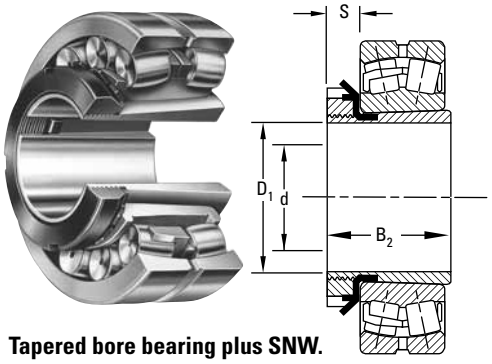

Tapered bore bearing plus SNW.

Continued from previous page.

Bearing No.[1]	Accessory Numbers				Shaft Dimensions		Adapter Dimensions			SNW/SNP Assembly Wt.
	Assembly	Sleeve	Locknut	Lockwasher Lockplate	Diameter d	Tolerance[2]	B_2	S	D_1	
					in.	in.	in.	in.	in.	lbs.
23184K	**SNP-3184 x 15 3/4**	**S-3184**	**N-084**	**P-84**	**15 3/4**	**-0.007**	**13 19/64**	**2 1/16**	**19 5/16**	**145.0**
23188K	**SNP-3188 x 16 1/2**	**S-3188**	**N-088**	**P-88**	**16 1/2**	**-0.007**	**13 61/64**	**2 3/8**	**20 1/2**	**229.0**
23192K	**SNP-3192 x 17**	**S-3192**	**N-092**	**P-92**	**17**	**-0.007**	**18 1/16**	**2 3/8**	**21 1/4**	**255.0**
23196K	**SNP-3196 x 18**	**S-3196**	**N-096**	**P-96**	**18**	**-0.007**	**15 5/32**	**2 3/8**	**22 1/16**	**293.0**
231/500K	**SNP-31/500 x 18 7/16**	**S-31/500**	**N-500**	**P-500**	**18 7/16**	**-0.007**	**16 1/2**	**2 45/64**	**22 13/16**	**315.0**
231/530K	**SNP-31/530 x 18 15/16**	**S-31/500 x 18 15/16**	**N-530**	**P-530**	**18 15/16**	**-0.007**	**17 17/64**	**2 45/64**	**24 13/16**	**355.0**
	SNP-31/530 x 19 7/16	S-31/530 x 19 7/16			19 7/16					
231/560K	**SNP-31/560 x 20 15/16**	**S-31/560**	**N-560**	**P-560**	**20 15/16**	**-0.007**	**17 59/64**	**2 61/64**	**25 9/16**	**408.0**
231/600K	**SNP-31/600 x 21 15/16**	**S-31/600**	**N-600**	**P-600**	**21 15/16**	**-0.007**	**18 55/64**	**2 61/64**	**27 9/16**	**516.0**
231/630K	**SNP-31/630 x 23 15/16**	**S-31/630**	**N-630**	**P-630**	**23 15/16**	**-0.007**	**19 51/64**	**2 61/64**	**28 3/4**	**556.0**
231/670K	**SNP-31/670 x 24 15/16**	**S-31/670**	**N-670**	**P-670**	**24 15/16**	**-0.007**	**21 1/32**	**3 9/64**	**30 11/16**	**759.0**
231/710K	**SNP-31/710 x 26 7/16**	**S-31/710**	**N-710**	**P-710**	**26 7/16**	**-0.007**	**21 15/16**	**3 37/64**	**32 11/16**	**833.0**
231/750K	**SNP-31/750 x 27 15/16**	**S-31/750**	**N-750**	**P-750**	**27 15/16**	**-0.007**	**22 63/64**	**3 37/64**	**34 1/4**	**997.0**
231/800K	**SNP-31/800 x 29 7/16**	**S-31/800**	**N-800**	**P-800**	**29 7/16**	**-0.007**	**19 1/64**	**3 37/64**	**36 1/4**	**1136.0**
231/850K	**SNP-31/850 x 31 7/16**	**S-31/850**	**N-850**	**P-850**	**31 7/16**	**-0.007**	**20 1/32**	**3 37/64**	**38 9/16**	**1303.0**

[1]Bold shaft sizes are standard. When ordering non-standard accessories, specify shaft size.
[2]Tolerance range is from +0 to value listed.

INCH ACCESSORIES – PUSH-TYPE SLEEVES

PUSH-TYPE REMOVABLE SLEEVE, LOCKNUT AND LOCKWASHER

The chart below shows dimensions for adapter assemblies and components used in the mounting of tapered bore bearings on shafts.

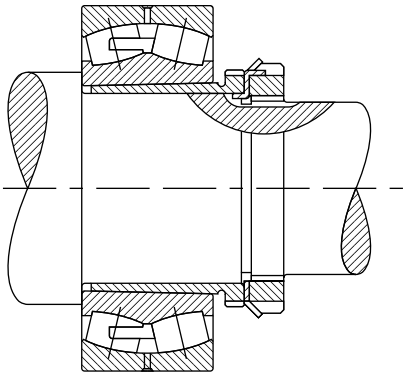

Bearing No.	Accessory Numbers				Shaft Dimensions		Adapter Dimensions			Removal Nut O.D.	Sleeve Wt.
	Sleeve	Locknut	Lockwasher Lockplate	Removal Nut	Diameter d	Tolerance[1]	Pitch Dia. B	L	a	C	
					mm in.	**mm** in.	**mm** in.	**mm** in.	**mm** in.	**mm** in.	**kg** lbs.
SERIES 222K											
22216K	SK-8022	N-14	W-14	AN-18	**70** 2.7559	**-0.10** -0.004	**88.19** 3.472	**50** 1.969	**3.50** 0.138	**118.39** 4.661	**0.5** 1.2
22217K	SK-8522	AN-15	W-15	AN-19	**75** 2.9528	**-0.10** -0.004	**93.35** 3.675	**52** 2.047	**3.50** 0.138	**125.55** 4.943	**0.6** 1.4
22218K	SK-9022	AN-16	W-16	AN-20	**80** 3.1496	**-0.10** -0.004	**98.12** 3.863	**53** 2.087	**3.50** 0.138	**131.90** 5.193	**0.6** 1.5
22219K	SK-9522	AN-17	W-17	AN-21	**85** 3.3465	**-0.10** -0.004	**103.28** 4.066	**57** 2.244	**4.00** 0.157	**138.25** 5.443	**0.8** 1.8
22220K	SK-10022	AN-18	W-18	AN-22	**90** 3.5433	**-0.10** -0.004	**109.12** 4.269	**59** 2.323	**4.00** 0.157	**145.39** 5.724	**0.9** 2.0
22222K	SK-11022	AN-20	W-20	ARN-22	**100** 3.9370	**-0.10** -0.004	**119.94** 4.722	**65** 2.559	**4.00** 0.157	**158.75** 6.250	**1.1** 2.4
22224K	SK-12022	AN-22	W-22	ARN-24	**110** 4.3307	**-0.13** -0.005	**130.28** 5.129	**72** 2.835	**4.00** 0.157	**174.63** 6.875	**1.4** 3.1
22226K	SK-13022	AN-22	W-22	ARN-26	**115** 4.5276	**-0.13** -0.005	**141.38** 5.566	**78** 3.071	**4.00** 0.15.7	**184.15** 7.250	**2.2** 5.0
22228K	SK-14022	AN-24	W-24	RN-28	**125** 4.9213	**-0.13** -0.005	**152.73** 6.013	**82** 3.228	**5.00** 0.197	**200.03** 7.875	**2.6** 5.8
22230K	SK-15022	AN-26	W-26	RN-30	**135** 5.3150	**-0.13** -0.005	**163.04** 6.419	**88** 3.465	**5.00** 0.197	**209.55** 8.250	**3.0** 6.8
22232K	SK-16022	AN-28	W-28	RN-32	**140** 5.5118	**-0.13** -0.005	**173.76** 6.841	**96** 3.780	**5.00** 0.197	**225.43** 8.875	**4.5** 9.9

[1]Tolerance range is from +0 to value listed.

Continued on next page.

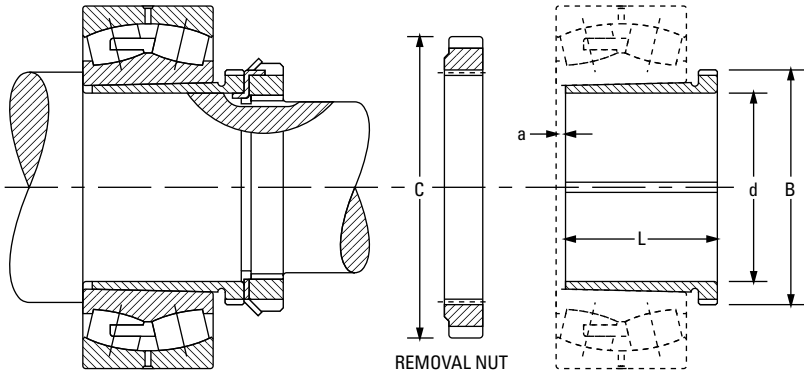

Tapered bore bearing mounted with push-type removable sleeve.

Continued from previous page.

Bearing No.	Accessory Numbers				Shaft Dimensions		Adapter Dimensions			Removal Nut O.D.	Sleeve Wt.
	Sleeve	Locknut	Lockwasher Lockplate	Removal Nut	Diameter d	Tolerance[1]	Pitch Dia. B	L	a	C	
					mm in.	**mm** in.	**mm** in.	**mm** in.	**mm** in.	**mm** in.	**kg** lbs.
22234K	SK-17022	AN-30	W-30	RN-34	**150** 5.9055	**-0.13** -0.005	**184.07** 7.247	**104** 4.095	**5.00** 0.197	**234.95** 9.250	**5.2** 11.5
22236K	SK-18022	AN-32	W-32	RN-36	**160** 6.2992	**-0.13** -0.005	**194.79** 7.669	**104** 4.095	**5.00** 0.197	**247.65** 9.750	**5.6** 12.5
22238K	SK-19022	AN-34	W-34	RN-38	**170** 6.6929	**-0.13** -0.005	**205.92** 8.107	**112** 4.409	**5.00** 0.197	**269.88** 10.625	**6.5** 14.5
22240K	SK-20022	AN-36	W-36	N-044	**180** 7.0866	**-0.13** -0.005	**217.02** 8.544	**118** 4.646	**5.00** 0.197	**279.53** 11.005	**7.4** 16.3
22244K	SK-22022	AN-40	W-40	N-048	**200** 7.8740	**-0.13** -0.005	**236.98** 9.330	**130** 5.118	**6.00** 0.236	**290.65** 11.443	**8.8** 19.6
22248K	SK-24022	N-44	W-44	N-052	**220** 8.6614	**-0.15** -0.006	**256.03** 10.080	**144** 5.669	**6.00** 0.236	**309.70** 12.193	**11.0** 24.3
22252K	SK-26022	N-048	P-48	N-056	**240** 9.4488	**-0.15** -0.006	**276.66** 10.892	**155** 6.102	**6.00** 0.236	**330.33** 13.005	**14.0** 30.9
22256K	SK-28022	N-052	P-52	RN-56	**260** 10.2362	**-0.15** -0.006	**301.27** 11.861	**155** 6.102	**8.00** 0.315	**425.45** 16.750	**15.0** 33.1
22260K	SK-30022	N-056	P-56	RN-60	**280** 11.0236	**-0.15** -0.006	**325.88** 12.830	**170** 6.693	**8.00** 0.315	**416.10** 16.382	**17.7** 39.2
22264K	SK-32022	N-060	P-60	RN-64	**300** 11.8110	**-0.15** -0.006	**345.72** 13.611	**180** 7.087	**10.00** 0.394	**431.8** 17.000	**21.0** 46.3

[1]Tolerance range is from +0 to value listed.

Continued on next page.

INCH ACCESSORIES – PUSH-TYPE SLEEVES – *continued*

PUSH-TYPE REMOVABLE SLEEVE, LOCKNUT AND LOCKWASHER

The chart below shows dimensions for adapter assemblies and components used in the tapered bore bearings on shafts.

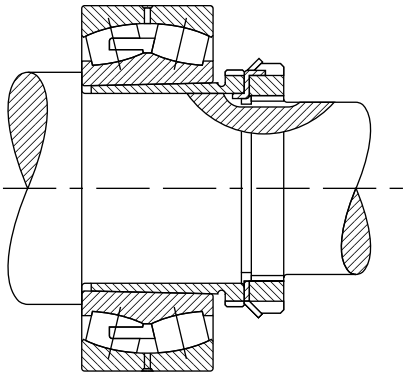

Continued from previous page.

Bearing No.	Accessory Numbers				Shaft Dimensions		Adapter Dimensions			Removal Nut O.D.	Sleeve Wt.
	Sleeve	Locknut	Lockwasher Lockplate	Removal Nut	Diameter d	Tolerance[1]	Pitch Dia. B	L	a	C	
					mm in.	mm in.	mm in.	mm in.	mm in.	mm in.	kg lbs.
SERIES 223K											
22308K	SK-4023	N-07	W-07	N-09	**35** 1.3780	**-0.08** -0.003	**43.94** 1.730	**40** 1.575	**3.00** 0.118	**64.41** 2.536	**0.1** 0.2
22309K	SK-4523	N-08	W-08	N-10	**40** 1.5748	**-0.08** -0.003	**49.02** 1.930	**44** 1.732	**3.00** 0.118	**68.40** 2.693	**0.1** 0.3
22310K	SK-5023	N-09	W-09	RN-10	**45** 1.7717	**-0.08** -0.003	**55.04** 2.167	**50** 1.969	**3.00** 0.118	**76.20** 3.000	**0.2** 0.4
22311K	SK-5523	N-10	W-10	RN-11	**50** 1.9685	**-0.08** -0.003	**60.20** 2.370	**54** 2.126	**3.00** 0.118	**81.76** 3.219	**0.2** 0.5
22312K	SK-6023	N-11	W-11	RN-12	**55** 2.1654	**-0.10** -0.004	**65.76** 2.589	**57** 2.244	**3.50** 0.138	**87.33** 3.438	**0.3** 0.6
22313K	SK-6523	N-12	W-12	AN-15	**60** 2.3622	**-0.10** -0.004	**73.10** 2.878	**61** 2.402	**3.50** 0.138	**98.55** 3.880	**0.3** 0.8
22314K	SK-7023	N-12	W-12	AN-16	**60** 2.3622	**-0.10** -0.004	**78.28** 3.082	**65** 2.559	**3.50** 0.138	**105.69** 4.161	**0.6** 1.5
22315K	SK-7523	N-13	W-13	AN-17	**65** 2.5591	**-0.10** -0.004	**83.44** 3.285	**69** 2.717	**3.50** 0.138	**112.04** 4.411	**0.8** 1.7
22316K	SK-8023	N-14	W-14	AN-18	**70** 2.7559	**-0.10** -0.004	**88.19** 3.472	**72** 2.835	**3.50** 0.138	**118.39** 4.661	**0.9** 2.0
22317K	SK-8523	AN-15	W-15	AN-19	**75** 2.9528	**-0.10** -0.004	**93.35** 3.675	**75** 2.953	**3.50** 0.138	**125.55** 4.943	**1.0** 2.2
22318K	SK-9023	AN-16	W-16	AN-20	**80** 3.1496	**-0.10** -0.004	**98.12** 3.863	**80** 3.150	**3.50** 0.138	**131.90** 5.193	**1.1** 2.5
22319K	SK-9523	AN-17	W-17	AN-21	**85** 3.3465	**-0.10** -0.004	**103.28** 4.066	**85** 3.346	**4.00** 0.157	**138.25** 5.443	**1.3** 2.9
22320K	SK-10023	AN-18	W-18	AN-22	**90** 3.5433	**-0.10** -0.004	**109.12** 4.269	**90** 3.543	**4.00** 0.157	**145.39** 5.724	**1.5** 3.3

[1]Tolerance range is from +0 to value listed.

Continued on next page.

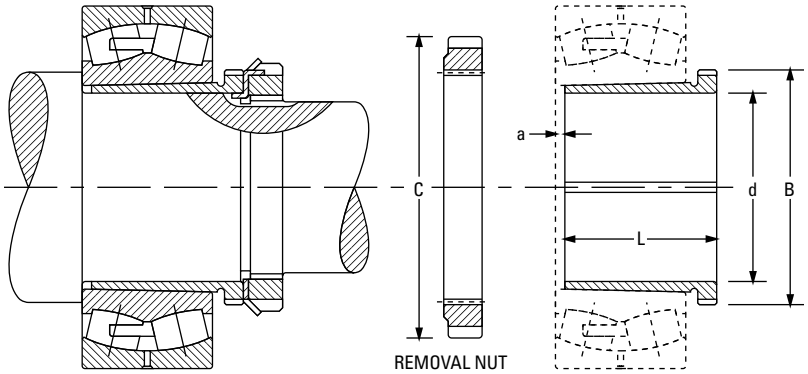

Tapered bore bearing mounted with push-type removable sleeve.

Continued from previous page.

Bearing No.	Accessory Numbers				Shaft Dimensions		Adapter Dimensions			Removal Nut O.D.	Sleeve Wt.
	Sleeve	Locknut	Lockwasher Lockplate	Removal Nut	Diameter d	Tolerance[1]	Pitch Dia. B	L	a	C	
					mm in.	**mm** in.	**mm** in.	**mm** in.	**mm** in.	**mm** in.	**kg** lbs.
22322K	SK-11023	AN-20	W-20	ARN-22	**100** 3.9370	**-0.10** -0.004	**119.94** 4.722	**98** 3.858	**4.00** 0.157	**158.75** 6.250	**1.9** 4.2
22324K	SK-12023	AN-22	W-22	ARN-24	**110** 4.3307	**-0.13** -0.005	**130.28** 5.129	**105** 4.134	**4.00** 0.157	**174.63** 6.875	**2.2** 5.0
22326K	SK-13023	AN-22	W-22	ARN-26	**115** 4.5276	**-0.13** -0.005	**141.38** 5.566	**115** 4.528	**4.00** 0.157	**184.15** 7.250	**3.6** 8.0
22328K	SK-14023	AN-24	W-24	RN-28	**125** 4.9213	**-0.13** -0.005	**152.73** 6.013	**125** 4.921	**5.00** 0.197	**200.03** 7.875	**4.3** 9.5
22330K	SK-15023	AN-26	W-26	RN-30	**135** 5.3150	**-0.13** -0.005	**163.04** 6.419	**135** 5.315	**5.00** 0.197	**209.55** 8.250	**5.1** 11.4
22332K	SK-16023	AN-28	W-28	RN-32	**140** 5.5118	**-0.13** -0.005	**173.76** 6.841	**140** 5.512	**6.00** 0.236	**225.43** 8.875	**7.0** 15.5
22334K	SK-17023	AN-30	W-30	RN-34	**150** 5.9055	**-0.13** -0.005	**184.07** 7.247	**146** 5.748	**6.00** 0.236	**234.95** 9.250	**7.8** 17.2
22336K	SK-18023	AN-32	W-32	RN-36	**160** 6.2992	**-0.13** -0.005	**194.79** 7.669	**154** 6.063	**6.00** 0.236	**247.65** 9.750	**9.1** 20.2
22338K	SK-19023	AN-34	W-34	RN-38	**170** 6.6929	**-0.13** -0.005	**205.92** 8.107	**160** 6.299	**7.00** 0.276	**269.88** 10.625	**10.0** 22.1
22340K	SK-20023	AN-36	W-36	N-044	**180** 7.0866	**-0.13** -0.005	**217.02** 8.544	**170** 6.693	**7.00** 0.276	**279.53** 11.005	**11.4** 25.2
22344K	SK-22023	AN-40	W-40	N-048	**200** 7.8740	**-0.13** -0.005	**236.98** 9.330	**181** 7.126	**8.00** 0.315	**290.65** 11.443	**13.3** 29.5
22348K	SK-24023	N-44	W-44	N-052	**220** 8.6614	**-0.15** -0.006	**256.03** 10.080	**189** 7.441	**8.00** 0.315	**309.70** 12.193	**15.5** 34.2
22352K	SK-26023	N-048	P-48	N-056	**240** 9.4488	**-0.15** -0.006	**276.66** 10.892	**200** 7.874	**8.00** 0.315	**330.33** 13.005	**18.2** 40.2
22356K	SK-28023	N-052	P-52	RN-56	**260** 10.2362	**-0.15** -0.006	**301.27** 11.861	**210** 8.268	**10.00** 0.394	**425.45** 16.75	**22.0** 48.5

[1]Tolerance range is from +0 to value listed.

INCH ACCESSORIES – LOCKNUTS AND LOCKWASHERS

- The chart below shows dimensions for locknuts and lockwashers used in the mounting of straight bore bearings on shafts.
- Other dimensions and tolerances related to shaft configurations are also shown.
- Dimensions are presented according to bearing bore size and are applicable to bearings in the various series (e.g., 222, 223, etc.).

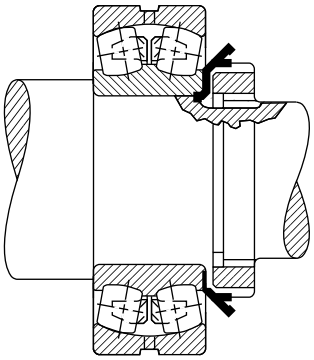

Bearing Bore	Locknut	Lockwasher	Threads Per Inch	Threads					
				Major Dia.		Pitch Dia.		Minor Dia.	Relief Dia. A
				Max.	Min.	Max.	Min.		
mm				**mm** in.	**mm** in.	**mm** in.	**mm** in.	**mm** in.	**mm** in.
35	N 07	W 07	18	**34.950** 1.3760	**34.740** 1.3678	**34.030** 1.3399	**33.930** 1.3359	**33.220** 1.3078	**32.820** 1.2922
40	N 08	W 08	18	**39.700** 1.5630	**39.490** 1.5548	**38.780** 1.5269	**38.670** 1.5224	**37.970** 1.4948	**37.570** 1.4792
45	N 09	W 09	18	**44.880** 1.7670	**44.670** 1.7588	**43.960** 1.7309	**43.850** 1.7264	**43.150** 1.6988	**42.750** 1.6832
50	N 10	W 10	18	**49.960** 1.9670	**49.750** 1.9588	**49.050** 1.9309	**48.930** 1.9264	**48.230** 1.8988	**47.830** 1.8832
55	N 11	W 11	18	**54.790** 2.1570	**54.580** 2.1488	**53.870** 2.1209	**53.740** 2.1158	**53.060** 2.0888	**52.660** 2.0732
60	N 12	W 12	18	**59.940** 2.3600	**59.740** 2.3518	**59.030** 2.3239	**58.900** 2.3188	**58.210** 2.2918	**57.820** 2.2762
65	N 13	W 13	18	**64.720** 2.5480	**64.510** 2.5398	**63.800** 2.5119	**63.670** 2.5068	**62.990** 2.4798	**62.590** 2.4642
70	N 14	W 14	18	**69.880** 2.7510	**69.670** 2.7428	**68.960** 2.7149	**68.830** 2.7098	**68.140** 2.6828	**67.750** 2.6672
75	AN 15	W 15	12	**74.500** 2.9330	**74.210** 2.9218	**73.120** 2.8789	**72.990** 2.8735	**71.900** 2.8308	**71.110** 2.7995
80	AN 16	W 16	12	**79.680** 3.1370	**79.400** 3.1258	**78.310** 3.0829	**78.160** 3.0770	**77.080** 3.0348	**76.290** 3.0035
85	AN 17	W 17	12	**84.840** 3.3400	**84.550** 3.3288	**83.460** 3.2859	**83.310** 3.2800	**82.240** 3.2378	**81.450** 3.2065
90	AN 18	W 18	12	**89.590** 3.5270	**89.300** 3.5158	**88.210** 3.4729	**88.020** 3.4655	**86.990** 3.4248	**86.200** 3.3935
95	AN 19	W 19	12	**94.740** 3.7300	**94.460** 3.7188	**93.370** 3.6759	**93.180** 3.6685	**92.150** 3.6278	**91.350** 3.5965
100	AN 20	W 20	12	**99.520** 3.9180	**99.230** 3.9068	**98.140** 3.8639	**97.960** 3.8565	**96.920** 3.8158	**96.130** 3.7845
105	AN 21	W 21	12	**104.700** 4.1220	**104.410** 4.1108	**103.320** 4.0679	**103.110** 4.0596	**102.100** 4.0198	**101.310** 3.9885
110	AN 22	W 22	12	**109.860** 4.3250	**109.570** 4.3138	**108.480** 4.2709	**108.270** 4.2626	**107.260** 4.2228	**106.460** 4.1915
120	AN 24	W 24	12	**119.790** 4.7160	**119.500** 4.7048	**118.410** 4.6619	**118.200** 4.6536	**117.190** 4.6138	**116.400** 4.5825

(1)See page D-76, table D-20 for suggested S-3 shaft limits.
(2)For W, L, H, S and M, tolerance is -0 to +0.4 mm, -0 to +1/64 in.

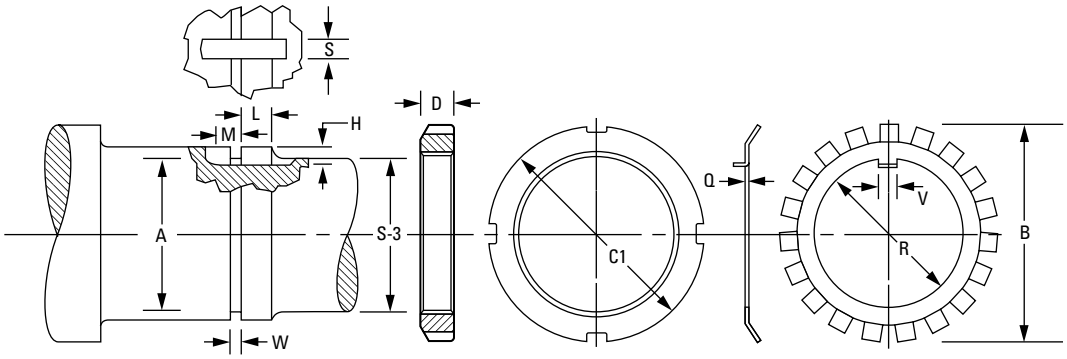

Shaft						Locknut		Lockwasher			
S-3[1]	W[2]	L[2]	H[2]	S[2]	M[2]	C1	D	Q	R	B	V
mm in.	**mm** in.	**mm** in.	**mm** in.	**mm** in.	**mm** in.	**mm** in.	**mm** in.	**mm** in.	**mm** in.	**mm** in.	**mm** in.
31.750 1 1/4	**2.4** 3/32	**12.7** 1/2	**2.4** 3/32	**4.8** 3/16	**3.2** 1/8	**52.39** 2 1/16	**11.40** 0.448	**1.30** 0.050	**36.00** 1.416	**57.20** 2 1/4	**4.50** 0.176
36.510 1 7/16	**3.2** 1/8	**13.5** 17/32	**2.4** 3/32	**7.9** 5/16	**3.2** 1/8	**57.15** 2 1/4	**11.40** 0.448	**1.50** 0.058	**40.70** 1.603	**62.70** 2 15/32	**7.40** 0.290
42.860 1 11/16	**3.2** 1/8	**13.5** 17/32	**2.4** 3/32	**7.9** 5/16	**4.0** 5/32	**64.30** 2 17/32	**11.40** 0.448	**1.50** 0.058	**46.20** 1.817	**69.50** 2 47/64	**7.40** 0.290
47.630 1 7/8	**3.2** 1/8	**15.1** 19/32	**2.4** 3/32	**7.9** 5/16	**4.0** 5/32	**68.30** 2 11/16	**13.00** 0.510	**1.50** 0.058	**51.20** 2.017	**74.20** 2 59/64	**7.40** 0.290
52.390 2 1/16	**3.2** 1/8	**15.1** 19/32	**3.2** 1/8	**7.9** 5/16	**4.0** 5/32	**75.40** 2 31/32	**13.00** 0.510	**1.60** 0.063	**56.10** 2.207	**79.00** 3 7/64	**7.40** 0.290
57.150 2 1/4	**3.2** 1/8	**15.9** 5/8	**3.2** 1/8	**7.9** 5/16	**4.0** 5/32	**80.20** 3 5/32	**13.70** 0.541	**1.60** 0.063	**61.60** 2.425	**85.00** 3 11/32	**7.40** 0.290
61.910 2 7/16	**3.2** 1/8	**16.7** 21/32	**3.2** 1/8	**7.9** 5/16	**4.0** 5/32	**85.70** 3 3/8	**14.60** 0.573	**1.60** 0.063	**66.40** 2.613	**90.90** 3 37/64	**7.40** 0.290
66.680 2 5/8	**3.2** 1/8	**16.7** 21/32	**3.2** 1/8	**7.9** 5/16	**6.4** 1/4	**92.10** 3 5/8	**14.60** 0.573	**1.60** 0.063	**71.50** 2.816	**97.20** 3 53/64	**7.40** 0.290
71.440 2 13/16	**4.0** 5/32	**17.5** 11/16	**3.2** 1/8	**7.9** 5/16	**6.4** 1/4	**98.40** 3 7/8	**15.30** 0.604	**1.60** 0.072	**76.30** 3.003	**104.40** 4 7/64	**7.40** 0.290
76.200 3	**4.0** 5/32	**17.5** 11/16	**3.2** 1/8	**9.5** 3/8	**6.4** 1/4	**105.60** 4 5/32	**15.30** 0.604	**1.80** 0.072	**81.50** 3.207	**111.10** 4 3/8	**9.00** 0.353
80.960 3 3/16	**4.0** 5/32	**16.7** 21/32	**3.2** 1/8	**9.5** 3/8	**6.4** 1/4	**111.90** 4 13/32	**16.10** 0.635	**1.80** 0.072	**87.00** 3.425	**117.50** 4 5/8	**9.00** 0.353
85.730 3 3/8	**4.0** 5/32	**20.6** 13/16	**4.0** 5/32	**9.5** 3/8	**6.4** 1/4	**118.30** 4 21/32	**17.70** 0.698	**2.40** 0.094	**91.70** 3.612	**125.40** 4 15/16	**9.00** 0.353
90.490 3 9/16	**4.0** 5/32	**21.4** 27/32	**4.0** 5/32	**9.5** 3/8	**6.4** 1/4	**125.40** 4 15/16	**18.50** 0.729	**2.40** 0.094	**97.30** 3.830	**132.60** 5 7/32	**9.00** 0.353
96.840 3 13/16	**4.0** 5/32	**22.2** 7/8	**4.0** 5/32	**9.5** 3/8	**7.9** 5/16	**131.80** 5 3/16	**19.30** 0.760	**2.40** 0.094	**102.10** 4.018	**139.70** 5 1/2	**9.00** 0.353
100.010 3 15/16	**4.0** 5/32	**22.2** 7/8	**4.0** 5/32	**9.5** 3/8	**7.9** 5/16	**138.10** 5 7/16	**19.30** 0.760	**2.40** 0.094	**107.20** 4.222	**144.90** 5 45/64	**9.00** 0.353
106.360 4 3/16	**4.0** 5/32	**23** 29/32	**4.8** 3/16	**9.5** 3/8	**7.9** 5/16	**145.30** 5 23/32	**20.10** 0.791	**3.20** 0.125	**112.40** 4.425	**154.00** 6 1/16	**9.00** 0.353
115.890 4 9/16	**4.0** 5/32	**23.8** 15/16	**4.8** 3/16	**9.5** 3/8	**7.9** 5/16	**155.60** 6 1/8	**20.90** 0.823	**3.20** 0.125	**122.70** 4.831	**164.30** 6 15/32	**9.00** 0.353

[1]See page D-76, table D-20 for suggested S-3 shaft limits.
[2]For W, L, H, S and M, tolerance is -0 to +0.4 mm, -0 to +1/64 in.

Continued on next page.

INCH ACCESSORIES – LOCKNUTS AND LOCKWASHERS – *continued*

- The chart below shows dimensions for locknuts and lockwashers used in the mounting of straight bore bearings on shafts.
- Other dimensions and tolerances related to shaft configurations are also shown.
- Dimensions are presented according to bearing bore size and are applicable to bearings in the various series (e.g., 222 and 223, etc.).

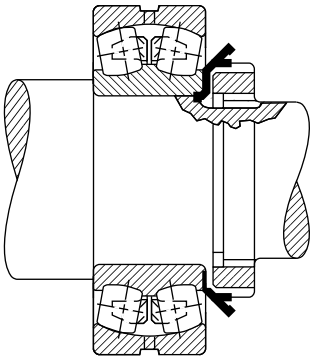

Continued from previous page.

Bearing Bore	Locknut	Lockwasher	Threads Per Inch	Threads					
				Major Dia.		Pitch Dia.		Minor Dia.	Relief Dia. A
				Max.	Min.	Max.	Min.		
mm				**mm** in.	**mm** in.	**mm** in.	**mm** in.	**mm** in.	**mm** in.
130	AN 26	W 26	12	**129.690** 5.1060	**129.410** 5.0948	**128.320** 5.0519	**128.110** 5.0436	**127.100** 5.0038	**126.300** 4.9725
140	AN 28	W 28	12	**139.620** 5.4970	**139.340** 5.4858	**138.250** 5.4429	**138.040** 5.4346	**137.030** 5.3948	**136.230** 5.3635
150	AN 30	W 30	12	**149.560** 5.8880	**149.270** 5.8768	**148.180** 5.8339	**147.970** 5.8256	**146.960** 5.7858	**146.160** 5.7545
160	AN 32	W 32	8	**159.610** 6.2840	**159.230** 6.2688	**157.550** 6.2028	**157.320** 6.1937	**155.720** 6.1306	**154.920** 6.0993
170	AN 34	W 34	8	**169.140** 6.6590	**168.750** 6.6438	**167.080** 6.5778	**166.850** 6.5687	**165.240** 6.5056	**164.450** 6.4743
180	AN 36	W 36	8	**179.480** 7.0660	**179.090** 7.0508	**177.410** 6.9848	**177.180** 6.9757	**175.580** 6.9126	**174.790** 6.8813
190	AN 38	W 38	8	**189.790** 7.4720	**189.400** 7.4568	**187.730** 7.3908	**187.500** 7.3817	**185.890** 7.3186	**185.100** 7.2873
200	AN 40	W 40	8	**199.310** 7.8470	**198.930** 7.8318	**197.250** 7.7658	**196.960** 7.7544	**195.420** 7.6936	**194.620** 7.6623
220	N 044	W 44	8	**219.150** 8.6280	**218.770** 8.6128	**217.090** 8.5468	**216.780** 8.5347	**215.250** 8.4746	**214.460** 8.4433

(1)See page D-76, table D-20 for suggested S-3 shaft limits.
(2)For W, L, H, S and M, tolerance is -0 to +0.4 mm, -0 to +1/64 in.

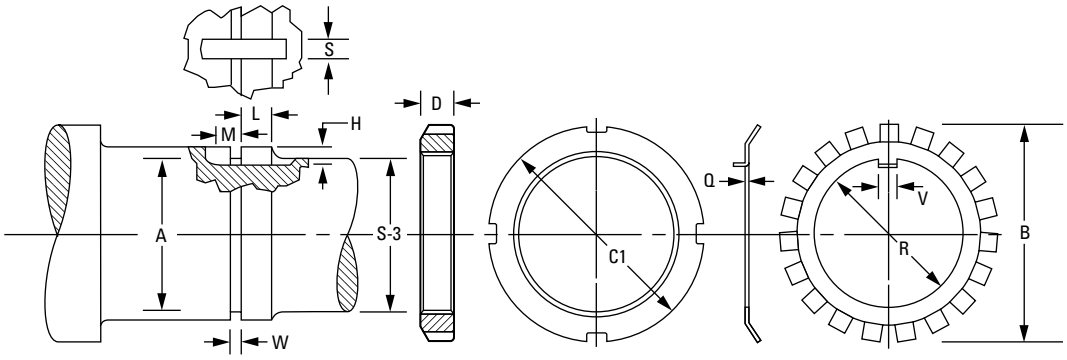

Shaft						Locknut		Lockwasher			
S-3[1]	W[2]	L[2]	H[2]	S[2]	M[2]	C1	D	Q	R	B	V
mm in.	**mm** in.	**mm** in.	**mm** in.	**mm** in.	**mm** in.	**mm** in.	**mm** in.	**mm** in.	**mm** in.	**mm** in.	**mm** in.
125.410 4 15/16	**4.0** 5/32	**25.4** 1	**4.8** 3/16	**12.7** 1/2	**7.9** 5/16	**171.50** 6 3/4	**22.50** 0.885	**3.20** 0.125	**132.70** 5.226	**178.60** 7 1/32	**11.10** 0.435
134.940 5 5/16	**4.0** 5/32	**27** 1 1/16	**4.8** 3/16	**15.9** 5/8	**7.9** 5/16	**180.20** 7 3/32	**24.10** 0.948	**3.20** 0.125	**142.70** 5.617	**188.90** 7 7/16	**15.00** 0.590
146.050 5 3/4	**4.0** 5/32	**28.6** 1 1/8	**5.6** 7/32	**15.9** 5/8	**9.5** 3/8	**195.30** 7 11/16	**24.90** 0.979	**4.00** 0.156	**152.90** 6.018	**204.80** 8 1/16	**15.00** 0.590
153.990 6 1/16	**6.4** 1/4	**30.2** 1 3/16	**6.0** 15/64	**15.9** 5/8	**9.5** 3/8	**204.80** 8 1/16	**26.40** 1.041	**4.00** 0.156	**163.20** 6.424	**214.30** 8 7/16	**15.00** 0.590
163.510 6 7/16	**6.4** 1/4	**31** 1 7/32	**6.0** 15/64	**19.1** 3/4	**9.5** 3/8	**219.90** 8 21/32	**27.30** 1.073	**4.00** 0.156	**172.70** 6.799	**230.20** 9 1/16	**18.20** 0.715
174.630 6 7/8	**6.4** 1/4	**31.8** 1 1/4	**6.0** 15/64	**19.1** 3/4	**9.5** 3/8	**230.20** 9 1/16	**28.00** 1.104	**4.00** 0.156	**183.00** 7.206	**239.70** 9 7/16	**18.20** 0.715
184.150 7 1/4	**6.4** 1/4	**32.5** 1 9/32	**6.0** 15/64	**19.1** 3/4	**9.5** 3/8	**240.50** 9 15/32	**28.80** 1.135	**4.00** 0.156	**193.30** 7.612	**250.80** 9 7/8	**18.20** 0.715
193.680 7 5/8	**6.4** 1/4	**34.1** 1 11/32	**6.0** 15/64	**22.2** 7/8	**9.5** 3/8	**250.00** 9 27/32	**30.40** 1.198	**4.00** 0.156	**203.60** 8.017	**261.90** 10 5/16	**21.30** 0.840
211.140 8 5/16	**6.4** 1/4	**34.9** 1 3/8	**9.5** 3/8	**27.0** 1 1/16	**9.5** 3/8	**279.40** 11	**31.80** 1.250	**3.20** 0.125	**221.10** 8.703	**290.50** 11 7/16	**23.90** 0.940

[1]See page D-76, table D-20 for suggested S-3 shaft limits.
[2]For W, L, H, S and M, tolerance is -0 to +0.4 mm, -0 to +1/64 in.

INCH ACCESSORIES – LOCKNUTS AND LOCKPLATES

- The chart below shows dimensions for locknuts and lockplates used in the mounting of straight bore bearings on shafts.
- Other dimensions and tolerances related to shaft configurations are also shown.
- Dimensions are presented according to bearing bore size and are applicable to bearings in the various series (e.g., 222, 223, etc.).

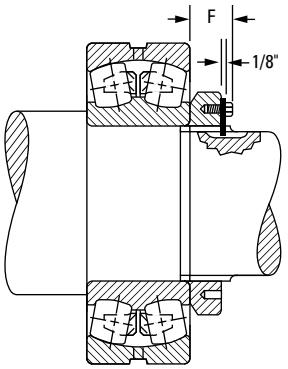

Bearing Bore	Locknut	Lockplate	Threads Per Inch	Threads					
				Major Dia.		Pitch Dia.		Minor Dia.	Relief Dia. A
				Max.	Min.	Max.	Min.		
mm				**mm** in.	**mm** in.	**mm** in.	**mm** in.	**mm** in.	**mm** in.
240	N 048	P 48	6	**239.83** 9.442	**239.31** 9.4218	**237.08** 9.3337	**236.76** 9.3213	**234.63** 9.2374	**233.44** 9.1905
260	N 052	P 52	6	**258.88** 10.192	**258.36** 10.1718	**256.13** 10.0837	**255.8** 10.0707	**253.68** 9.9874	**252.49** 9.9405
280	N 056	P 56	6	**279.50** 11.004	**278.99** 10.9838	**276.75** 10.8957	**276.42** 10.8827	**274.31** 10.7994	**273.11** 10.7525
300	N 060	P 60	6	**299.34** 11.785	**298.83** 11.7648	**296.59** 11.6767	**296.26** 11.6637	**294.14** 11.5804	**292.95** 11.5335
320	N 064	P 64	6	**319.08** 12.562	**318.56** 12.5418	**316.32** 12.4537	**315.98** 12.4402	**313.88** 12.3574	**312.69** 12.3105
340	N 068	P 68	5	**337.90** 13.303	**337.49** 13.287	**335.36** 13.203	**334.95** 13.187	**332.31** 13.083	**331.11** 13.036
360	N 072	P 72	5	**359.00** 14.134	**358.60** 14.118	**356.46** 14.034	**356.06** 14.018	**353.42** 13.914	**352.22** 13.867
380	N 076	P 76	5	**378.99** 14.921	**378.59** 14.905	**376.45** 14.821	**376.05** 14.805	**373.41** 14.701	**372.21** 14.654
400	N 080	P 80	5	**399.01** 15.709	**398.60** 15.693	**396.47** 15.609	**396.06** 15.593	**393.42** 15.489	**392.23** 15.442
420	N 084	P 84	5	**419.00** 16.496	**418.59** 16.480	**416.46** 16.396	**416.05** 16.380	**413.41** 16.276	**412.22** 16.229
440	N 088	P 88	5	**438.99** 17.283	**438.58** 17.267	**436.45** 17.183	**436.05** 17.167	**433.40** 17.063	**432.21** 17.016
460	N 092	P 92	5	**459.00** 18.071	**458.60** 18.055	**456.46** 17.971	**456.06** 17.955	**453.42** 17.851	**452.22** 17.804
480	N 096	P 96	5	**478.99** 18.858	**478.59** 18.842	**476.45** 18.758	**476.05** 18.742	**473.41** 18.638	**472.21** 18.591

(1)See page D-76, table D-20 for suggested S-3 shaft limits.
(2)C is outer-ring width that may be obtained from bearing dimension tables.
(3)For L, H, S and M, tolerance is -0 to +1/64 in., -0 to + 0.4 mm.

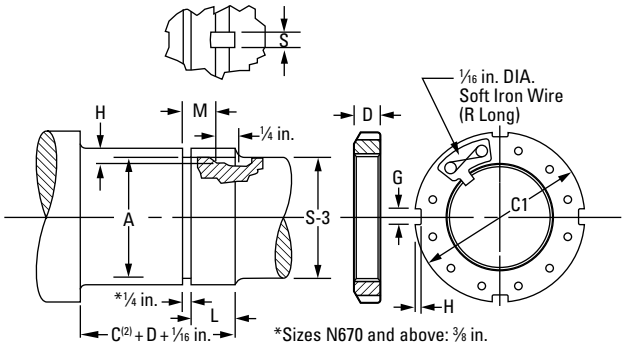

Shaft					Locknut/Lockplate					
S-3[1]	L[3]	H[3]	S[3]	M[3]	C1	D	G	H ±0.25 mm ±0.010 in.	R	F
mm in.	mm in.	mm in.	mm in.	mm in.	mm in.	mm in.	mm in.	mm in.	mm in.	mm in.
233.36 9 3/16	**42.86** 1 11/16	**11.1** 7/16	**28.6** 1 1/8	**34.9** 1 3/8	**290.5** 11 7/16	**34.1** 1 11/32	**22.48** 0.885	**9.5** 3/8	**203.2** 8	**43.26** 1 45/64
252.41 9 15/16	**45.24** 1 25/32	**11.1** 7/16	**30.2** 1 3/16	**37.3** 1 15/32	**309.6** 12 3/16	**35.7** 1 13/32	**22.48** 0.885	**9.5** 3/8	**228.6** 9	**44.85** 1 49/64
273.05 10 3/4	**47.63** 1 7/8	**11.1** 7/16	**31.8** 1 1/4	**39.7** 1 9/16	**330.2** 13	**38.1** 1 1/2	**25.65** 1.010	**9.5** 3/8	**228.6** 9	**47.23** 1 55/64
292.1 11 1/2	**49.21** 1 15/16	**11.1** 7/16	**34.9** 1 3/8	**41.3** 1 5/8	**360.4** 14 3/16	**39.7** 1 9/16	**25.65** 1.010	**12.7** 1/2	**254.0** 10	**50.01** 1 31/32
312.74 12 5/16	**51.59** 2 1/32	**11.1** 7/16	**36.5** 1 7/16	**43.7** 1 23/32	**381.0** 15	**42.1** 1 21/32	**25.65** 1.010	**12.7** 1/2	**254.0** 10	**52.39** 2 1/16
331.79 13 1/16	**56.36** 2 7/32	**11.1** 7/16	**38.1** 1 1/2	**48.4** 1 29/32	**400.1** 15 3/4	**45.2** 1 25/32	**25.65** 1.010	**12.7** 1/2	**279.4** 11	**55.56** 2 3/16
350.84 13 13/16	**56.36** 2 7/32	**12.7** 1/2	**38.1** 1 1/2	**48.4** 1 29/32	**419.1** 16 1/2	**45.2** 1 25/32	**32.00** 1.260	**12.7** 1/2	**279.4** 11	**55.56** 2 3/16
371.48 14 5/8	**59.53** 2 11/32	**12.7** 1/2	**38.1** 1 1/2	**51.59** 2 1/32	**450.9** 17 3/4	**48.4** 1 29/32	**32.00** 1.260	**15.1** 19/32	**304.8** 12	**61.12** 2 13/32
390.53 15 3/8	**63.50** 2 1/2	**12.7** 1/2	**41.3** 1 5/8	**55.6** 2 3/16	**469.9** 18 1/2	**52.4** 2 1/16	**32.00** 1.260	**15.1** 19/32	**330.2** 13	**65.09** 2 9/16
411.16 16 3/16	**63.50** 2 1/2	**12.7** 1/2	**41.3** 1 5/8	**55.6** 2 3/16	**490.5** 19 5/16	**52.4** 2 1/16	**35.18** 1.385	**15.1** 19/32	**330.2** 13	**65.09** 2 9/16
431.80 17	**71.44** 2 13/16	**12.7** 1/2	**46.0** 1 13/16	**63.50** 2 1/2	**520.7** 20 1/2	**60.3** 2 3/8	**35.18** 1.385	**15.1** 19/32	**355.6** 14	**75.41** 2 31/32
450.85 17 3/4	**71.44** 2 13/16	**12.7** 1/2	**46.0** 1 13/16	**63.50** 2 1/2	**539.8** 21 1/4	**60.3** 2 3/8	**35.18** 1.385	**15.1** 19/32	**406.4** 16	**75.41** 2 31/32
469.9 18 1/2	**71.44** 2 13/16	**12.7** 1/2	**46.0** 1 13/16	**63.50** 2 1/2	**560.4** 22 1/16	**60.3** 2 3/8	**38.35** 1.510	**15.1** 19/32	**406.4** 16	**75.41** 2 31/32

[1]See page D-76, table D-20 for suggested S-3 shaft limits.
[2]C is outer-ring width that may be obtained from bearing dimension tables.
[3]For L, H, S and M, tolerance is -0 to +1/64 in., -0 to + 0.4 mm.

Continued on next page.

INCH ACCESSORIES – LOCKNUTS AND LOCKPLATES – *continued*

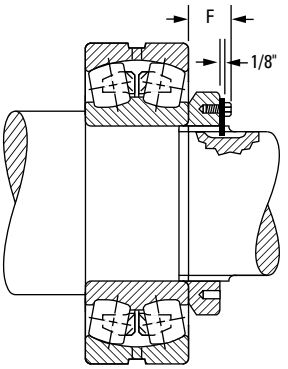

- The chart below shows dimensions for locknuts and lockplates used in the mounting of straight bore bearings on shafts.
- Other dimensions and tolerances related to shaft configurations are also shown.
- Dimensions are presented according to bearing bore size and are applicable to bearings in the various series (e.g., 222, 223, etc.).

Continued from previous page.

Bearing Bore	Locknut	Lockplate	Threads Per Inch	Threads					
				Major Dia.		Pitch Dia.		Minor Dia.	Relief Dia. A
				Max.	Min.	Max.	Min.		
mm				**mm** in.	**mm** in.	**mm** in.	**mm** in.	**mm** in.	**mm** in.
500	N 500	P 500	5	**499.01** 19.646	**498.60** 19.630	**496.47** 19.546	**496.06** 19.530	**493.42** 19.426	**492.23** 19.379
530	N 530	P 530	4	**529.01** 20.827	**528.50** 20.807	**525.83** 20.702	**525.32** 20.682	**522.15** 20.557	**520.55** 20.494
560	N 560	P 560	4	**559.00** 22.008	**558.50** 21.988	**555.83** 21.883	**555.32** 21.863	**552.15** 21.738	**550.55** 21.675
600	N 600	P 600	4	**599.01** 23.583	**598.50** 23.563	**595.83** 23.458	**595.33** 23.438	**592.15** 23.313	**590.55** 23.250
630	N 630	P 630	4	**629.01** 24.764	**628.50** 24.744	**625.83** 24.639	**625.32** 24.619	**622.15** 24.494	**520.55** 24.431
670	N 670	P 670	4	**669.01** 26.339	**668.50** 26.319	**665.84** 26.214	**665.33** 26.194	**662.15** 26.069	**660.55** 26.006
710	N 710	P 710	3	**709.02** 27.914	**708.33** 27.887	**704.77** 27.747	**704.09** 27.720	**700.02** 27.56	**698.42** 27.497
750	N 750	P 750	3	**749.02** 29.489	**748.34** 29.462	**744.78** 29.322	**744.09** 29.295	**740.03** 29.135	**738.43** 29.072
800	N 800	P 800	3	**799.01** 31.457	**798.32** 31.430	**794.77** 31.290	**794.08** 31.263	**790.02** 31.103	**788.42** 31.040
850	N 850	P 850	3	**849.02** 33.426	**848.34** 33.399	**844.78** 33.259	**844.09** 33.232	**840.03** 33.072	**838.43** 33.009
900	N 900	P 900	3	**899.01** 35.394	**898.32** 35.367	**894.77** 35.227	**894.08** 35.200	**890.02** 35.040	**888.42** 34.977
950	N 950	P 950	3	**949.02** 37.363	**948.33** 37.336	**944.78** 37.196	**944.09** 37.169	**940.03** 37.009	**938.43** 36.946

(1)See page D-76, table D-20 for suggested S-3 shaft limits.
(2)C is outer-ring width that may be obtained from bearing dimension tables.
(3)For L, H, S and M, tolerance is -0 to +1/64 in., -0 to + 0.4 mm.

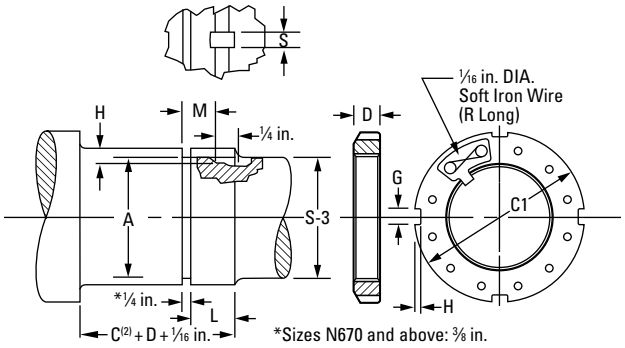

Shaft					Locknut/Lockplate					
S-3[1]	L[3]	H[3]	S[3]	M[3]	C1	D	G	H ±0.25 mm ±0.010 in.	R	F
mm in.	mm in.	mm in.	mm in.	mm in.	mm in.	mm in.	mm in.	mm in.	mm in.	mm in.
489.0 19 1/4	**79.4** 3 1/8	**12.7** 1/2	**46.0** 1 13/16	**71.4** 2 13/16	**579.4** 22 13/16	**68.3** 2 11/16	**38.35** 1.510	**15.1** 19/32	**406.4** 16	**83.3** 3 9/32
517.5 20 3/8	**79.4** 3 1/8	**12.7** 1/2	**46.0** 1 13/16	**71.4** 2 13/16	**630.2** 24 13/16	**68.3** 2 11/16	**41.53** 1.635	**20.6** 13/16	**425.5** 16 3/4	**83.3** 3 9/32
549.3 21 5/8	**85.7** 3 3/8	**12.7** 1/2	**46.0** 1 13/16	**77.8** 3 1/16	**649.3** 25 9/16	**74.6** 2 15/16	**41.53** 1.635	**20.6** 13/16	**476.3** 18 3/4	**89.7** 3 17/32
587.4 23 1/8	**85.7** 3 3/8	**12.7** 1/2	**46.0** 1 13/16	**77.8** 3 1/16	**700.1** 27 9/16	**74.6** 2 15/16	**41.53** 1.635	**20.6** 13/16	**508.0** 20	**89.7** 3 17/32
619.1 24 3/8	**85.7** 3 3/8	**12.7** 1/2	**50.8** 2	**77.8** 3 1/16	**730.3** 28 3/4	**74.6** 2 15/16	**47.88** 1.885	**20.6** 13/16	**520.7** 20 1/2	**92.1** 3 5/8
657.2 25 7/8	**90.5** 3 9/16	**12.7** 1/2	**50.8** 2	**82.6** 3 1/4	**779.5** 30 11/16	**79.4** 3 1/8	**47.88** 1.885	**20.6** 13/16	**546.1** 21 1/2	**96.8** 3 13/16
695.3 27 3/8	**101.6** 4	**15.9** 5/8	**50.8** 2	**93.7** 3 11/16	**830.3** 32 11/16	**90.5** 3 9/16	**51.30** 2.020	**25.4** 1	**571.5** 22 1/2	**108.0** 4 1/4
736.6 29	**101.6** 4	**15.9** 5/8	**50.8** 2	**93.7** 3 11/16	**870.0** 34 1/4	**90.5** 3 9/16	**57.66** 2.270	**25.4** 1	**584.2** 23	**108.0** 4 1/4
787.4 31	**101.6** 4	**15.9** 5/8	**50.8** 2	**93.7** 3 11/16	**920.8** 36 1/4	**90.5** 3 9/16	**57.66** 2.270	**25.4** 1	**616.0** 24 1/4	**108.0** 4 1/4
835.0 32 7/8	**101.6** 4	**15.9** 5/8	**50.8** 2	**93.7** 3 11/16	**979.5** 38 9/16	**90.5** 3 9/16	**64.01** 2.520	**25.4** 1	**647.7** 25 1/2	**108.0** 4 1/4
885.8 34 7/8	**111.1** 4 3/8	**15.9** 5/8	**50.8** 2	**103.2** 4 1/16	**1030.3** 40 9/16	**100.0** 3 15/16	**64.01** 2.520	**25.4** 1	**666.8** 26 1/4	**117.5** 4 5/8
933.5 36 3/4	**114.3** 4 1/2	**19.1** 3/4	**50.8** 2	**108** 4 1/4	**1092.2** 43	**100.0** 3 15/16	**64.01** 2.520	**25.4** 1	**692.2** 27 1/4	**117.5** 4 5/8

[1]See page D-76, table D-20 for suggested S-3 shaft limits.
[2]C is outer-ring width that may be obtained from bearing dimension tables.
[3]For L, H, S and M, tolerance is -0 to +1/64 in., -0 to + 0.4 mm.

INCH HMVC HYDRAULIC NUTS

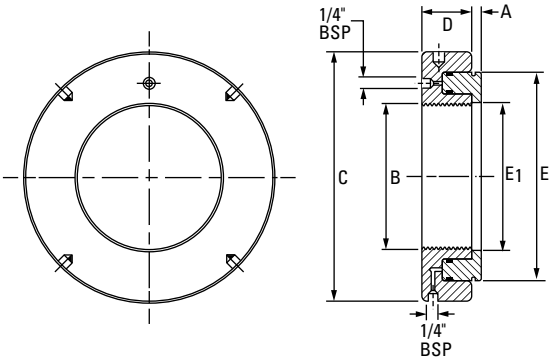

Part No.	Major Dia. B	Threads Per Inch	Dimensions					Piston Length of Travel	Piston Area	Assembly Wt.
			C	D	E	E_1	A			
	in.		in.	in.	in.	in.	in.	in.	in.²	lbs.
HMVC - 10	1.967	18	4.488	1.496	3.386	2.008	0.157	0.197	4.5	5.5
HMVC - 12	2.360	18	4.921	1.496	3.701	2.402	0.197	0.197	5.0	6.2
HMVC - 13	2.548	18	5.315	1.496	3.976	2.598	0.197	0.197	5.4	6.6
HMVC - 14	2.751	18	5.512	1.496	4.213	2.795	0.197	0.197	6.0	7.3
HMVC - 15	2.933	12	5.709	1.496	4.409	2.992	0.197	0.197	6.3	7.7
HMVC - 16	3.137	12	5.906	1.496	4.606	3.189	0.197	0.197	6.5	8.4
HMVC - 17	3.340	12	6.102	1.496	4.803	3.386	0.197	0.197	6.8	8.6
HMVC - 18	3.527	12	6.299	1.496	5.000	3.583	0.197	0.197	7.4	9.0
HMVC - 19	3.730	12	6.496	1.496	5.236	3.780	0.197	0.197	7.7	9.7
HMVC - 20	3.918	12	6.693	1.496	5.433	3.976	0.236	0.197	8.1	10.0
HMVC - 22	4.325	12	7.087	1.496	5.866	4.370	0.236	0.197	8.8	12.5
HMVC - 24	4.716	12	7.480	1.496	6.260	4.764	0.236	0.197	9.5	11.7
HMVC - 26	5.106	12	7.874	1.496	6.693	5.157	0.236	0.197	10.1	12.5
HMVC - 28	5.497	12	8.268	1.496	7.087	5.551	0.276	0.197	10.7	13.4
HMVC - 30	5.888	12	8.661	1.535	7.480	5.945	0.276	0.197	11.6	14.5
HMVC - 32	6.284	8	9.252	1.575	8.110	6.339	0.276	0.236	13.3	17.0
HMVC - 34	6.659	8	9.645	1.614	8.465	6.732	0.276	0.236	14.7	18.5
HMVC - 36	7.066	8	10.039	1.615	8.858	7.126	0.276	0.236	16.0	20.0
HMVC - 38	7.472	8	10.630	1.653	9.409	7.520	0.315	0.276	17.8	23.1
HMVC - 40	7.847	8	11.024	1.693	9.882	7.913	0.315	0.276	19.4	25.1
HMVC - 44	8.628	8	12.008	1.732	10.748	8.740	0.315	0.354	22.3	29.5
HMVC - 48	9.442	6	12.992	1.811	11.654	9.528	0.354	0.394	25.6	35.9
HMVC - 52	10.192	6	13.976	1.850	12.559	10.315	0.354	0.433	29.1	41.8
HMVC - 56	11.004	6	14.961	1.929	13.425	11.102	0.354	0.472	32.7	48.4
HMVC - 60	11.785	6	15.945	2.008	14.331	11.890	0.394	0.551	36.6	56.3
HMVC - 64	12.562	6	16.929	2.087	15.236	12.677	0.394	0.551	40.8	65.1
HMVC - 68	13.334	5	17.717	2.087	16.063	13.465	0.394	0.551	44.0	71.5
HMVC - 72	14.170	5	18.701	2.205	16.969	14.252	0.394	0.590	48.5	81.4
HMVC - 76	14.957	5	19.685	2.283	17.795	15.039	0.433	0.630	52.1	90.2
HMVC - 80	15.745	5	20.669	2.362	18.701	15.827	0.433	0.669	56.9	101.2
HMVC - 84	16.532	5	21.457	2.401	19.606	16.614	0.433	0.669	62.0	110.9
HMVC - 88	17.319	5	22.244	2.441	20.433	17.402	0.472	0.669	65.9	121.0
HMVC - 92	18.107	5	23.228	2.520	21.299	18.189	0.472	0.669	69.8	134.2
HMVC - 96	18.894	5	24.094	2.559	22.165	18.976	0.472	0.748	75.2	143.0
HMVC - 100	19.682	5	25.000	2.598	23.031	19.764	0.472	0.748	80.6	157.3
HMVC - 106	20.867	4	26.378	2.716	24.291	20.945	0.512	0.827	87.1	176.0
HMVC - 112	21.923	4	27.756	2.795	25.591	22.126	0.512	0.866	94.9	198.0
HMVC - 120	23.623	4	29.528	2.874	27.283	23.701	0.512	0.905	104.5	220.0
HMVC - 126	24.804	4	30.709	2.913	28.583	24.882	0.551	0.905	113.0	242.0
HMVC - 134	26.379	4	32.480	2.992	30.236	26.457	0.551	0.945	123.2	270.6
HMVC - 142	27.961	3	34.252	3.071	31.969	28.031	0.590	0.984	135.9	301.4
HMVC - 150	29.536	3	36.024	3.110	33.661	29.606	0.590	0.984	150.4	330.0
HMVC - 160	31.504	3	38.189	3.150	35.748	31.575	0.630	0.984	161.2	380.6
HMVC - 170	33.473	3	40.157	3.268	37.874	33.543	0.630	1.024	177.6	418.0
HMVC - 180	35.441	3	42.126	3.386	39.960	35.511	0.669	1.181	192.2	462.0
HMVC - 190	37.410	3	44.291	3.386	42.087	37.480	0.669	1.181	210.2	523.6

HMVC - 10 through HMVC - 64 have American National Threads Class 3.

HMVC - 68 through HMVC - 190 have Acme General-Purpose Threads Class 3G.

INDEX

TIMKEN® SAF SPLIT-BLOCK HOUSED UNITS

10M 1-13: 29 Order No. 10591 | Timken® is a registered trademark of The Timken Company. | © 2013 The Timken Company | Printed in U.S.A.

TIMKEN

The Timken team applies their know-how to improve the reliability and performance of machinery in diverse markets worldwide. The company designs, makes and markets high-performance steel as well as mechanical components, including bearings, gears, chain and related mechanical power transmission products and services.

www.timken.com

Stronger. **Commitment.** Stronger. **Value.** Stronger. **Worldwide.** Stronger. **Together.** | Stronger. **By Design.**

Price: USD $75

TIMKEN

TIMKEN® SNT PLUMMER BLOCK CATALOG

TIMKEN® SNT PLUMMER BLOCK CATALOG INDEX

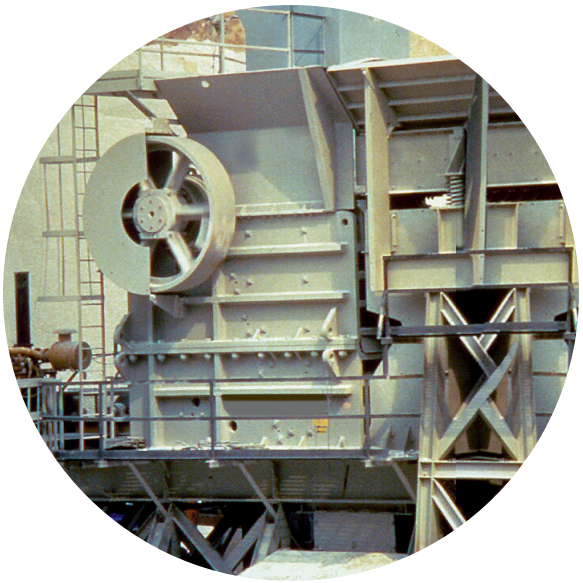

GROW STRONGER WITH TIMKEN

Every day, people around the world count on the strength of Timken. Our expertise in metallurgy, friction management and mechanical power transmission helps them accelerate improvements in productivity and uptime.

We supply products and services that can help keep your operations moving forward, whether you need drivetrain kits for commercial vehicles, durable housings for bearings in dirty environments, couplings that avoid metal-to-metal contact between motors and gearboxes, repair services for rail bearings, steel for an aircraft engine shaft, or other products and services for your applications.

When you choose Timken, you receive more than high-quality products and services: you gain a worldwide team of highly trained and experienced Timken people committed to working collaboratively with you to improve your business.

Globally, our 20,000 people provide reliable answers for a wide range of operations in manufacturing, mining, medical equipment, aerospace, transportation, oil and gas – and other diverse industries.

INCREASE YOUR EQUIPMENT UPTIME

In addition to high-quality bearings, engineered steel and mechanical power transmission components, we provide valuable integrated products and services. For example, we offer repair services and monitoring equipment that can alert you to problems before they impact your uptime.

Additionally, we offer a broad selection of seals, premium lubricants, lubricators, couplings and chain to keep your operations moving smoothly.

Our 10 technology centers in the United States, Europe and Asia help pioneer tomorrow's innovations with extensive basic and applied scientific research programs. Through internal development and strategic acquisition of innovative companies, we continue to expand our portfolio of highly engineered bearings, steel and components.

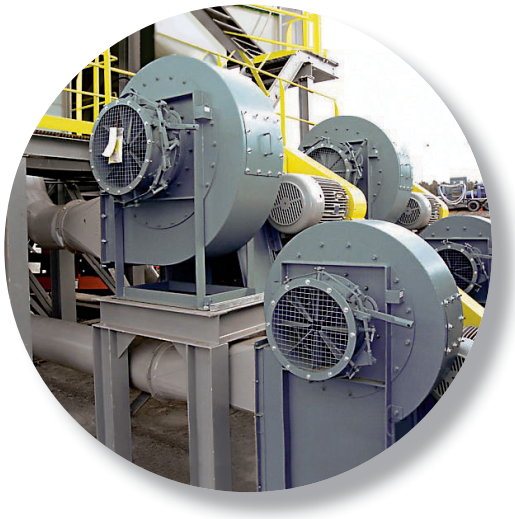

RUGGED TIMKEN® HOUSED UNITS HELP PROTECT YOUR BEARINGS

When you choose sturdy Timken housings, your bearings can keep rolling smoothly, even in harsh environments impacted by dirt, debris, water and other contaminants. Timken engineers designed special housings to withstand tough challenges on the job.

Protected inside durable cast iron, ductile iron or steel, our highly engineered Timken® ball and roller bearings work hard to help you manufacture and transport materials, without excessive maintenance due to contaminants.

Choose from our selection of housed units designed with ball, tapered and spherical bearings. Select enhancements like Timken® seals, lubricants and housing covers best suited for each task. Our engineers help you choose the right combination of bearings and accessories to extend bearing life, increase uptime and reduce maintenance costs.

Of course, you can interchange existing products with Timken housed units because our bolt holes and shaft centerline dimensions are designed to conform to industry standards.

Timken® housed units reflect our strengths in metallurgy, engineering and manufacturing. We ensure that all our bearings meet the Timken standard for quality.

TIMKEN® SNT SPLIT PLUMMER BLOCKS CARRY HEAVY LOADS

Timken® SNT split plummer blocks are available in metric sizes. Their rugged cast iron, ductile iron or cast steel designs stand up to a range of industrial environments. Our Timken SNT plummer blocks have separate, matched caps and bases. In larger sizes where plummer blocks are heavier, this split-block design eases installation. Remove the cap using a pry-tool slot for bearing inspection, service and replacement.

Available in a variety of metric shaft sizes, Timken SNT plummer block units offer the choice of tapered-bore design for easy mounting or straight-bore design for better axial location. The block can be converted from fixed to float by adding or removing the locating rings. A variety of sealing options help protect against contamination including all-purpose elastomer seals, deflection-type V-ring seals, precision labyrinth seals and heavy-duty taconite seals for highly contaminated environments.

TYPICAL INDUSTRIES AND APPLICATIONS

Use Timken SNT plummer blocks in power generation (coal), mining, aggregate, cement, metals, pulp, paper and other forestry operations, water treatment and food processing industries. Applications include warehousing, conveyors, bulk material handling and industrial fans and blowers.

TIMKEN® SAF SPLIT PILLOW BLOCKS HANDLE HEAVY LOADS

Timken® SAF split pillow blocks are available in imperial sizes. Their rugged cast iron, ductile iron or cast steel designs stand up to a range of industrial environments. Our Timken SAF blocks have separate, matched caps and bases. In larger sizes where pillow blocks are heavier, this split-block design eases installation. Remove the cap using a pry-tool slot for bearing inspection, service and replacement.

Available in a variety of imperial shaft sizes, Timken SAF units offer the choice of tapered-bore design for easy mounting or straight-bore design for better axial location. The block can be converted from fixed to float by removing the locating ring. Several sealing options protect against contamination, including our standard seal, which is a precision aluminum triple-ring labyrinth seal.

TYPICAL INDUSTRIES AND APPLICATIONS

Use Timken SAF housed bearings in power generation (coal), mining, aggregate, cement, metals, pulp, paper and other forestry operations, water treatment and food processing industries. Applications include warehousing, conveyors, bulk material handling and industrial fans and blowers.

TIMKEN® SPHERICAL ROLLER BEARING SOLID-BLOCK HOUSED UNITS WITHSTAND HARSH CONDITIONS

Timken® spherical roller bearing solid-block housed units stand up to rugged conditions. Composed of solid steel, they withstand most falling debris and handle up to ±1.5 degrees of misalignment. The steel used in these products is up to two times stronger than cast iron, which may break or pound out in tough applications.

Timken spherical roller bearing solid-block housed units come in five locking configurations: single and double set screws, eccentric locks for reversing applications, tapered-adaptor locks and double-tapered locks.

Choose from three sealing options: labyrinth seals (for high-speed, high-temperature applications) and triple-lip seals made of either nitrile or urethane. Timken® steel auxiliary covers provide an extra layer of protection, and they can be filled with Timken lubricants.

TYPICAL INDUSTRIES AND APPLICATIONS

Use Timken spherical roller bearing solid-block housed units in metals mills, aggregate and cement, mining, power generation, agriculture, pulp, paper, sawmills and other forest industries.

TIMKEN® TYPE E HOUSED UNITS REPEL CONTAMINANTS, ENHANCE PERFORMANCE

Timken® Type E tapered roller bearing housed units feature double-lip seals and locking collars that protect against water and other contaminants. This double-lip seal design blocks debris and retains grease better than single-lip or triple-lip seals, according to Timken 2012 laboratory tests.

Its cast-iron exterior includes a corrosion-resistant electro-coat finish for the housing and collar offering a more durable shield than industry-standard powder coating or black oxide. Set screws with nylon patches reduce back-out, even in rigorous applications.

Premium Timken® tapered roller bearings inside Type E housings are manufactured with advanced technology that results in longer predicted useful bearing life than other housed units with standard bearings. Designed with optimized bearing profiles and improved surface finishes, Timken tapered roller bearings operate efficiently within the housing.

TYPICAL INDUSTRIES AND APPLICATIONS

Use Timken Type E housings for pulp and paper, power generation, mining, cement and aggregate industries. Our Type E housed units also are widely used in equipment for air-handling and treatment of water and waste water. Other common machine applications include mixers, washers, shredders, mills and oven/furnace roller beds.

TIMKEN® BALL HOUSED UNITS OFFER EASY INSTALLATION, FLEXIBLE OPTIONS

Timken® ball housed units, available in a variety of sizes and types, feature wide-inner-ring ball bearings that provide additional shaft support and locking options. The Timken® wide-inner-ring ball bearing is designed for straight shafts and can be positioned without shoulders, locknuts or adapters.

For easy installation, our ball housed units can be ordered pre-assembled with bearings, housings, seals and locking systems. Choose from pillow blocks, flanged cartridges, take-up units and cylindrical cartridges. Our cast-iron, pressed-steel and other optional materials give you durable choices for the exterior covers. Timken® locking options include set screws, self-locking collars and concentric collars.

Timken® Shaft Guarding Technology™ deters set-screw damage to shafts by placing a hardened band in the groove along the inner ring of the bearing. The set screws press against the band to transfer gripping pressure onto the shaft, preventing nicks, as well as raised-metal or permanent shaft damage. The stainless-steel band resists corrosion on the shaft. This system is particularly helpful for applications where it would be expensive and time-consuming to replace shafts.

TYPICAL INDUSTRIES AND APPLICATIONS

Use Timken ball bearing housed units in agricultural applications, fans, blowers, food processing devices and conveyors.

HOW TO USE THIS CATALOG

We designed this catalog to help you find the Timken housed units best suited to your specifications.

Timken offers an extensive range of bearings and accessories in both imperial and metric sizes. For your convenience, size ranges are indicated in millimeters and inches. Contact your Timken engineer to learn more about our complete line for the special needs of your application.

This publication contains dimensions, tolerances and load ratings, as well as engineering sections describing fitting practices for shafts and housings, internal clearances, materials and other bearing features. It provides valuable assistance in the initial consideration of the type and characteristics of the bearings that may best suit your particular needs.

ISO and ANSI/ABMA, as used in this publication, refer to the International Organization for Standardization and the American National Standards Institute/American Bearing Manufacturers Association.

Updates are made periodically to this catalog. Visit www.timken.com for the most recent version of the Timken® SNT Plummer Block Catalog.

DISCLAIMER

This catalog is provided solely to give you analysis tools and data to assist you in your product selection. Product performance is affected by many factors beyond the control of Timken. Therefore, you must validate the suitability and feasibility of all product selections.

Timken products are sold subject to Timken terms and conditions of sale, which include our limited warranty and remedy. You can find these at http://www.timken.com/en-us/purchase/Pages/TermsandConditionsofSale.aspx.

Please consult with your Timken engineer for more information and assistance.

Every reasonable effort has been made to ensure the accuracy of the information in this writing, but no liability is accepted for errors, omissions or for any other reason.

SHELF LIFE AND STORAGE OF GREASE-LUBRICATED BEARINGS AND COMPONENTS

To help you get the most value from our products, Timken provides guidelines for the shelf life of grease-lubricated ball and roller bearings, components and assemblies. Shelf life information is based on Timken and industry test data and experience.

SHELF LIFE POLICY

Shelf life should be distinguished from lubricated bearing/component design life as follows:

- Shelf life of the grease-lubricated bearing/component represents the period of time prior to use or installation.
- The shelf life is a portion of the anticipated aggregate design life. It is impossible to accurately predict design life due to variations in lubricant bleed rates, oil migration, operating conditions, installation conditions, temperature, humidity and extended storage.
- Shelf life values, available from Timken, represent a maximum limit and assume adherence to the storage and handling guidelines suggested in this catalog or by a Timken associate. Deviations from the Timken storage and handling guidelines may reduce shelf life. Any specification or operating practice that defines a shorter shelf life should be used.

Timken cannot anticipate the performance of the grease lubricant after the bearing or component is installed or placed in service.

TIMKEN IS NOT RESPONSIBLE FOR THE SHELF LIFE OF ANY BEARING/COMPONENT LUBRICATED BY ANOTHER PARTY.

European REACH Compliance

Timken lubricants, greases and similar products sold in standalone containers or delivery systems are subject to the European REACH (**R**egistration, **E**valuation, **A**uthorization and Restriction of **CH**emicals) directive. For import into the European Union, Timken can sell and provide only those lubricants and greases that are registered with ECHA (**E**uropean **CH**emical **A**gency). For further information, please contact your Timken engineer.

STORAGE

Timken suggests the following storage guidelines for our finished products (bearings, components and assemblies, referred to as "products"):

- Unless directed otherwise by Timken, products should be kept in their original packaging until they are ready to be placed into service.
- Do not remove or alter any labels or stencil markings on the packaging.
- Products should be stored in such a way that the packaging is not pierced, crushed or otherwise damaged.
- After a product is removed from its packaging, it should be placed into service as soon as possible.
- When removing a product that is not individually packaged from a bulk pack container, the container should be resealed immediately after the product is removed.
- Do not use product that has exceeded its shelf life as defined in the Timken shelf life guidelines statement.
- The storage area temperature should be maintained between 0° C (32° F) and 40° C (104° F); temperature fluctuations should be minimized.
- The relative humidity should be maintained below 60 percent and the surfaces should be dry.
- The storage area should be kept free from airborne contaminants such as, but not limited to, dust, dirt, harmful vapors, etc.
- The storage area should be isolated from undue vibration.
- Extreme conditions of any kind should be avoided.

Due to the fact that Timken is not familiar with your particular storage conditions, we strongly suggest following these guidelines. However, you may be required by circumstances or applicable government requirements to adhere to stricter storage requirements.

Most bearing components typically ship protected with a corrosion-preventive compound that is not a lubricant. These components may be used in oil-lubricated applications without removal of the corrosion-preventive compound. When using some specialized grease lubrications, we advise you to remove the corrosion-preventive compound before packing the bearing components with suitable grease.

Be careful in selecting lubrication, however, since different lubricants are often incompatible.

When you receive a bearing or plummer block shipment, do not remove products from their packaging until they are ready for mounting so they do not become corroded or contaminated.

Store bearings and bearing housings in an appropriate atmosphere so they remain protected for the intended period.

WARNING

Failure to observe the following warnings could create a risk of death or serious injury.

Proper maintenance and handling practices are critical. Failure to follow selection recommendations and installation instructions and to maintain proper lubrication can result in equipment failure.

Overheated bearings can ignite explosive atmospheres. Special care must be taken to properly select, install, maintain, and lubricate housed unit bearings that are used in or near atmospheres that may contain explosive levels of combustible gases or accumulations of dust such from grain, coal, or other combustible materials. Consult your equipment designer or supplier for installation and maintenance instructions.

If hammer and bar are used for installation or removal of a part, use a mild steel bar (e.g., 1010 or 1020 grade). Mild steel bars are less likely to cause release of high-speed fragments from the hammer, bar or the part being removed.

CAUTION

Failure to follow these cautions may result in property damage.

Do not use damaged housed units.

Warnings for this product line are in this catalog and posted on www.timken.com/warnings.

NOTE

Do not use excessive force when mounting or dismounting the unit.

Follow all tolerance, fit, and torque recommendations.

Always follow the Original Equipment Manufacturer's installation and maintenance guidelines.

Ensure proper alignment.

Never weld housed units.

Do not heat components with an open flame.

Do not operate at bearing temperatures above 121° C (250° F).

TIMKEN® SNT SPLIT PLUMMER BLOCKS DELIVER PERFORMANCE

The Timken® SNT plummer blocks metric product line is available with a variety of components and accessories that allow for customizable solutions. SNT split plummer blocks are available in rugged cast iron, ductile iron or cast steel to match a range of industrial environments and applications. Our Timken SNT plummer blocks have separate, matched caps and bases. These housings feature multiple design attributes to ease installation, including center marks for easier alignment and dimples for positioning pins and mounting bolt holes. Remove the cap using a pry-tool slot for bearing inspection, service and replacement.

Available in a variety of shaft sizes, Timken SNT plummer blocks offer the choice of tapered-bore design for easy mounting or a straight-bore design for better axial location. The block can be converted from fixed to float by adding or removing locating rings. Sealing options for the Timken SNT include double-lip, labyrinth, V-ring and taconite designs.

TYPICAL INDUSTRIES AND APPLICATIONS

Common uses include processing and material handling equipment found in many industries, including power generation (coal), mining, aggregate, cement, metal mills, pulp, paper and other forestry operations, water treatment and food processing. Applications include conveyors, bulk material handling, industrial fans and blowers.

Updates are made periodically to this catalog. Visit www.timken.com for the most recent version of the Timken® SNT Plummer Block Catalog (order no. 10624).

ENGINEERING

The following topics are covered within this engineering section:

- Spherical roller bearing design types.
- Shaft fitting practice and mounting recommendations.

This engineering section is not intended to be comprehensive, but does serve as a useful guide in spherical roller bearing and SNT plummer block housing selection.

To view the complete engineering catalog, please visit www.timken.com. To order the catalog, please contact your Timken engineer and request a copy of the Timken Engineering Manual (order no. 10424).

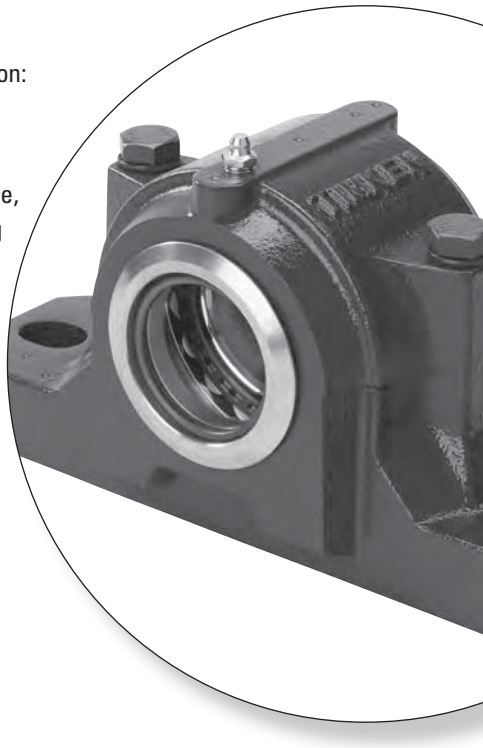

RADIAL SPHERICAL ROLLER BEARING TYPES AND CAGES

The principle styles of radial spherical roller bearings that Timken offers are:

- ≤600 mm O.D.: EJ, EM and EMB
- ≥600 mm O.D.: YMB

Above suffixes correspond to different types of designs depending on bearing size and geometry. The main difference is the cage design used in the assembly. Spherical roller bearings with an EJ cage suffix are fitted with a stamped-steel cage. YM/EM/YMB suffixes are used with brass cage designs.

The newly redesigned Timken® EJ, EM and EMB bearings offer higher load ratings, increased thermal speed ratings and reduced operating temperatures compared to the previous offering.

In addition to these improvements, cage designs vary between the different styles as noted below.

Style	Cage Design
EJ	Land-riding steel cage; one per row
EM	Roller-riding one-piece brass cage
EMB/YMB	Land-riding one-piece brass cage

Most Timken® spherical roller bearings are available with a cylindrical bore as well as a tapered bore. Tapered bore bearing part numbers are designated with a K suffix.

METRIC SYSTEM TOLERANCES

Spherical roller bearings are manufactured to a number of specifications, with each having classes that define tolerances on dimensions such as bore, O.D., width and runout. Metric bearings have been manufactured to corresponding standard negative tolerances.

The following table summarizes the different specifications and classes for spherical roller bearings and other available Timken bearing lines. For the purposes of this catalog, ISO specifications are shown for spherical roller bearings.

Boundary dimension tolerances for spherical roller bearing usage are listed in the following tables. These tolerances are provided for use in selecting bearings for general applications, in conjunction with the bearing mounting and fitting practices offered in later sections.

TABLE 1. BEARING SPECIFICATIONS AND CLASSES

System	Specification	Bearing Type	Standard Bearing Class		Precision Bearing Class			
Metric	ISO/DIN	All Bearing Types	P0	P6	P5	P4	P2	–
Imperial	ABMA	Spherical	RBEC 1	RBEC 3	RBEC 5	RBEC 7	RBEC 9	–

Standard Timken radial spherical roller bearings maintain normal tolerances according to ISO 492. Tables 2 and 3 list the critical tolerances for these bearing types. Timken SNT housings are used with bearings that conform to ISO P0, or standard tolerances.

The term deviation is defined as the difference between a single ring dimension and the nominal dimension. For metric tolerances, the nominal dimension is at a +0 mm tolerance. The deviation is the tolerance range for the listed parameter. Variation is defined as the difference between the largest and smallest measurements of a given parameter for an individual ring.

TABLE 2. SPHERICAL ROLLER BEARING TOLERANCES – INNER RING (METRIC)[1]

Bearing Bore		Bore Deviation[2] Δ_{dmp}			Width Variation V_{BS}			Radial Runout K_{ia}			Face Runout with Bore S_d	Axial Runout S_{ia}	Width Deviation Inner & Outer Rings[2] Δ_{Bs} and Δ_{Cs}	
Over	Incl.	P0	P6	P5	P0	P6	P5	P0	P6	P5	P5	P5	P0, P6	P5
mm in.	mm in.	mm in.	mm in.	mm in.	mm in.	mm in.	mm in.	mm in.	mm in.	mm in.	mm in.	mm in.	mm in.	mm in.
2.5000 0.0984	**10.000** 0.3937	**-0.008** -0.0003	**-0.007** -0.0003	**-0.005** -0.0002	**0.015** 0.0006	**0.015** 0.0006	**0.005** 0.0002	**0.010** 0.0004	**0.006** 0.0002	**0.004** 0.0002	**0.007** 0.0003	**0.007** 0.0003	**-0.120** -0.0047	**-0.040** -0.0157
10.000 0.3937	**18.000** 0.7087	**-0.008** -0.0003	**-0.007** -0.0003	**-0.005** -0.0002	**0.020** 0.0008	**0.020** 0.0008	**0.005** 0.0002	**0.010** 0.0004	**0.007** 0.0003	**0.004** 0.0002	**0.007** 0.0003	**0.007** 0.0003	**-0.120** -0.0047	**-0.080** -0.0031
18.000 0.7087	**30.000** 1.1811	**-0.010** -0.0004	**-0.008** -0.0003	**-0.006** -0.0002	**0.020** 0.0008	**0.020** 0.0008	**0.005** 0.0002	**0.013** 0.0005	**0.008** 0.0003	**0.004** 0.0002	**0.008** 0.0003	**0.008** 0.0003	**-0.120** -0.0047	**-0.120** -0.0047
30.000 1.1811	**50.000** 1.9685	**-0.012** -0.0005	**-0.010** -0.0004	**-0.008** -0.0003	**0.020** 0.0008	**0.020** 0.0008	**0.005** 0.0002	**0.015** 0.0006	**0.010** 0.0004	**0.005** 0.0002	**0.008** 0.0003	**0.008** 0.0003	**-0.120** -0.0047	**-0.120** -0.0047
50.000 1.9685	**80.000** 3.1496	**-0.015** -0.0006	**-0.012** -0.0005	**-0.009** -0.0004	**0.025** 0.0010	**0.025** 0.0010	**0.006** 0.0002	**0.020** 0.0008	**0.010** 0.0004	**0.005** 0.0002	**0.008** 0.0003	**0.008** 0.0003	**-0.150** -0.0059	**-0.150** -0.0059
80.000 3.1496	**120.000** 4.7244	**-0.020** -0.0008	**-0.015** -0.0006	**-0.010** -0.0004	**0.025** 0.0010	**0.025** 0.0010	**0.007** 0.0003	**0.025** 0.0010	**0.013** 0.0005	**0.006** 0.0002	**0.009** 0.0004	**0.009** 0.0004	**-0.200** -0.0079	**-0.200** -0.0079
120.000 4.7244	**150.000** 5.9055	**-0.025** -0.0010	**-0.018** -0.0007	**-0.013** -0.0005	**0.030** 0.0012	**0.030** 0.0012	**0.008** 0.0003	**0.030** 0.0012	**0.018** 0.0007	**0.008** 0.0003	**0.010** 0.0004	**0.010** 0.0004	**-0.250** -0.0098	**-0.250** -0.0098
150.000 5.9055	**180.000** 7.0866	**-0.025** -0.0010	**-0.018** -0.0007	**-0.013** -0.0005	**0.030** 0.0012	**0.030** 0.0012	**0.008** 0.0003	**0.030** 0.0012	**0.018** 0.0007	**0.008** 0.0003	**0.010** 0.0004	**0.010** 0.0004	**-0.250** -0.0098	**-0.250** -0.0098
180.000 7.0866	**250.000** 9.8425	**-0.030** -0.0012	**-0.022** -0.0009	**-0.015** -0.0006	**0.030** 0.0012	**0.030** 0.0012	**0.010** 0.0004	**0.040** 0.0016	**0.020** 0.0008	**0.010** 0.0004	**0.011** 0.0004	**0.013** 0.0005	**-0.300** -0.0018	**-0.300** -0.0018
250.000 9.8425	**315.000** 12.4016	**-0.035** -0.0014	**-0.025** -0.0010	**-0.018** -0.0007	**0.035** 0.0014	**0.035** 0.0014	**0.013** 0.0005	**0.050** 0.0020	**0.025** 0.0010	**0.013** 0.0005	**0.013** 0.0005	**0.015** 0.0006	**-0.350** -0.0138	**-0.350** -0.0138
315.000 12.4016	**400.000** 15.7480	**-0.040** -0.0016	**-0.030** -0.0012	**-0.023** -0.0009	**0.040** 0.0016	**0.040** 0.0016	**0.015** 0.0006	**0.060** 0.0024	**0.030** 0.0012	**0.015** 0.0006	**0.015** 0.0006	**0.020** 0.0008	**-0.400** -0.0157	**-0.400** -0.0157
400.000 15.7480	**500.000** 19.6850	**-0.045** -0.0018	**-0.035** -0.0014	–	**0.050** 0.0020	**0.045** 0.0018	–	**0.065** 0.0026	**0.035** 0.0014	–	–	–	**-0.450** -0.0177	–
500.000 19.6850	**630.000** 24.8031	**-0.050** -0.0020	**-0.040** -0.0016	–	**0.060** 0.0024	**0.050** 0.0020	–	**0.070** 0.0028	**0.040** 0.0016	–	–	–	**-0.500** -0.0197	–
630.000 24.8031	**800.000** 31.4961	**-0.075** -0.0030	–	–	**0.070** 0.0028	–	–	**0.080** 0.0031	–	–	–	–	**-0.750** -0.0295	–

[1]Symbol definitions are found on pages 32-33 of the Timken Engineering Manual (order no. 10424).
[2]Tolerance range is from +0 to value listed.
NOTE: Tolerance and shaft diameters are shown in the table as variances from nominal bearing bore.

TABLE 3. SPHERICAL ROLLER BEARING TOLERANCES – OUTER RING (METRIC)[1]

Bearing O.D.		Outside Deviation[2]			Width Variation		Radial Runout			Axial Runout	Outside Diameter Runout With Face
		Δ_{Dmp}			V_{CS}		K_{ea}			S_{ea}	S_D
Over	Incl.	P0	P6	P5	P0	P6	P0	P6	P5	P5	P5
mm in.	**mm** in.	**mm** in.	**mm** in.	**mm** in.	**mm** in.	**mm** in.	**mm** in.	**mm** in.	**mm** in.	**mm** in.	**mm** in.
0.000 0.0000	**18.000** 0.7087	**-0.008** -0.0003	**-0.007** -0.0003	**-0.005** -0.0002	**0.015** 0.0006	**0.005** 0.0002	**0.015** 0.0006	**0.008** 0.0003	**0.005** 0.0002	**0.008** 0.0003	**0.008** 0.0003
18.000 0.7087	**30.000** 1.1811	**-0.009** -0.0004	**-0.008** -0.0003	**-0.006** -0.00024	**0.020** 0.0008	**0.005** 0.0002	**0.015** 0.0006	**0.009** 0.0004	**0.006** 0.00024	**0.008** 0.0003	**0.008** 0.0003
30.000 1.1811	**50.000** 1.9685	**-0.011** -0.0004	**-0.009** -0.0004	**-0.007** -0.0003	**0.020** 0.0008	**0.005** 0.0002	**0.020** 0.0008	**0.010** 0.0004	**0.007** 0.0003	**0.008** 0.0003	**0.008** 0.0003
50.000 1.9685	**80.000** 3.1496	**-0.013** -0.0005	**-0.011** -0.0004	**-0.009** -0.0004	**0.025** 0.0010	**0.006** 0.00024	**0.025** 0.0010	**0.013** 0.0005	**0.008** 0.0003	**0.010** 0.0004	**0.008** 0.0003
80.000 3.1496	**120.000** 4.7244	**-0.015** -0.0006	**-0.013** -0.0005	**-0.010** -0.0004	**0.025** 0.0010	**0.008** 0.0003	**0.035** 0.0014	**0.018** 0.0007	**0.010** 0.0004	**0.011** 0.0004	**0.009** 0.0004
120.000 4.7244	**150.000** 5.9055	**-0.018** -0.0007	**-0.015** -0.0006	**-0.011** -0.0004	**0.030** 0.0012	**0.008** 0.0003	**0.040** 0.0016	**0.020** 0.0008	**0.011** 0.0004	**0.013** 0.0005	**0.010** 0.0004
150.000 5.9055	**180.000** 7.0866	**-0.025** -0.0010	**-0.018** -0.0007	**-0.013** -0.0005	**0.030** 0.0012	**0.008** 0.0003	**0.045** 0.0018	**0.023** 0.0009	**0.013** 0.0005	**0.014** 0.0006	**0.010** 0.0004
180.000 7.0866	**250.000** 9.8425	**-0.030** -0.0012	**-0.020** -0.0008	**-0.015** -0.0006	**0.030** 0.0012	**0.010** 0.0004	**0.050** 0.0020	**0.025** 0.0010	**0.015** 0.0006	**0.015** 0.0006	**0.011** 0.0004
250.000 9.8425	**315.000** 12.4016	**-0.035** -0.0014	**-0.025** -0.0010	**-0.018** -0.0007	**0.035** 0.0014	**0.011** 0.0004	**0.060** 0.0024	**0.030** 0.0012	**0.018** 0.0007	**0.018** 0.0007	**0.013** 0.0005
315.000 12.4016	**400.000** 15.7480	**-0.040** -0.0016	**-0.028** -0.0011	**-0.020** -0.0008	**0.040** 0.0016	**0.013** 0.0005	**0.070** 0.0028	**0.035** 0.0014	**0.020** 0.0008	**0.020** 0.0008	**0.013** 0.0005
400.000 15.7480	**500.000** 19.6850	**-0.045** -0.0018	**-0.033** -0.0013	**-0.023** -0.0009	**0.045** 0.0018	**0.015** 0.0006	**0.080** 0.0031	**0.040** 0.0016	**0.023** 0.0009	**0.023** 0.0009	**0.015** 0.0006
500.000 19.6850	**630.000** 24.8031	**-0.050** -0.0020	**-0.038** -0.0015	**-0.028** -0.0011	**0.050** 0.0020	**0.018** 0.0007	**0.100** 0.0039	**0.050** 0.0020	**0.025** 0.0010	**0.025** 0.0010	**0.018** 0.0007
630.000 24.8031	**800.000** 31.4961	**-0.075** -0.0030	**-0.045** -0.0018	**-0.035** -0.0014	–	**0.020** 0.0008	**0.120** 0.0047	**0.060** 0.0024	**0.030** 0.0012	**0.030** 0.0012	**0.020** 0.0008
800.000 31.4961	**1000.000** 39.3701	**-0.100** -0.0040	**-0.060** -0.0024	–	–	–	**0.140** 0.0055	**0.075** 0.0030	–	–	–
1000.000 39.3701	**1250.000** 49.2126	**-0.125** -0.0050	–	–	–	–	**0.160** 0.0063	– –	–	–	–

[1]Symbol definitions are found on pages 32-33 of the Timken Engineering Manual (order no. 10424).
[2]Tolerance range is from +0 to value listed.
NOTE: Tolerance and shaft diameters are shown in the table as variances from nominal bearing bore.

SPHERICAL ROLLER BEARING MOUNTING, FITTING, SETTING AND INSTALLATION

MOUNTING

Typically, spherical roller bearings are mounted in combination with another spherical roller bearing or a cylindrical roller bearing.

With spherical roller bearings, typically one bearing is fixed axially and the other is mounted with loose fits and axial clearance. This allows axial movement or float for environmental conditions such as uneven thermal growth between shaft and housing. In SNT housings, two or more locating rings can be used. With these ring(s) installed, a fixed bearing is achieved. When the ring(s) are removed, and provided the bearing is properly located in the housing, the bearing can float freely.

Fig. 1 shows a fixed split housing with a locating ring installed and a float bearing without the locating ring.

FITTING PRACTICE

Tables 6 through 8 on pages 29 through 35 list the recommended fitting practice for spherical roller bearing inner rings on shafts. The tables assume:

- The bearing is of normal precision.
- The shaft is solid and made from steel.
- The bearing seats are ground or turned to less than approximately 1.6 Ra finish.

The suggested fit symbols are in accordance with ISO 286. For help with suggested fitting practice, contact your Timken engineer.

As a general guideline, rotating inner rings should be applied with an interference fit. Loose fits may permit the inner rings to creep or turn, and wear the shaft and the backing shoulder. This wear may result in excessive bearing looseness and possible bearing and shaft damage. Additionally, abrasive metal particles resulting from creep or turning may enter into the bearing and cause damage and vibration.

The load conditions and bearing envelope dimensions should be used to select the suggested shaft fit from the tables.

Contact your Timken engineer if you require the specific fit practice used for a given SNT housing.

WARNING

Failure to observe the following warnings could create a risk of death or serious injury.

Proper maintenance and handling practices are critical. Always follow installation instructions and maintain proper lubrication.

Overheated bearings can ignite explosive atmospheres. Special care must be taken to properly select, install, maintain, and lubricate housed unit bearings that are used in or near atmospheres that may contain explosive levels of combustible gases or accumulations of dust such as from grain, coal, or other combustible materials. Consult your equipment designer or supplier for installation and maintenance instructions.

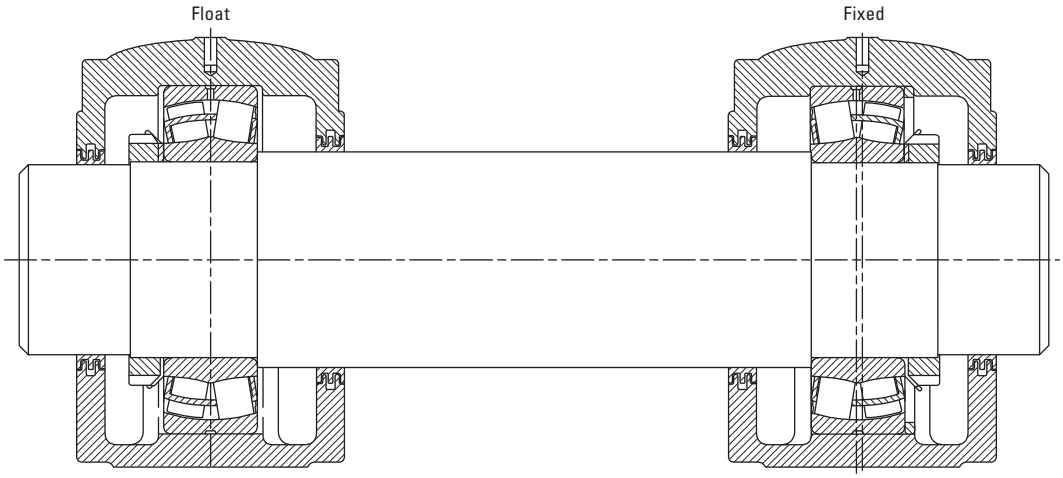

Fig. 1. Split housing showing fixed and float mounting.

TAPERED BORE DESIGNS

Typically, tapered bore bearings are selected to simplify shaft mounting and dismounting. Since the spherical roller bearing is not separable, mounting can be simplified by use of an adapter sleeve with a cylindrical bore and tapered O.D. A tapered bore roller bearing also can be mounted directly onto a tapered shaft.

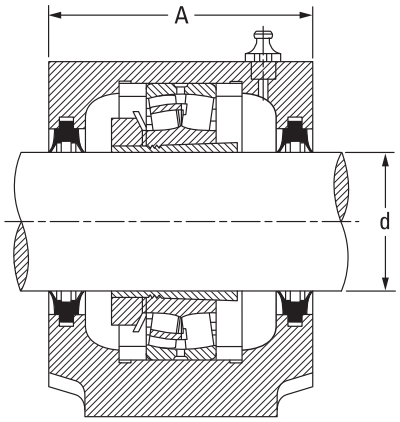

Fig. 2. Spherical roller bearing mounted with an adapter sleeve.

Bearings with a tapered bore typically require a tighter fit on the shaft than bearings with a cylindrical bore. A locknut is typically used to drive the inner ring up a tapered shaft sleeve. The locknut position is then secured by use of a lockwasher or lockplate. Timken offers a wide range of accessories to ease the assembly of spherical roller bearings with a tapered bore (see page 25). For approximating the clearance loss for axial drive-up, an 85 percent radial loss approximation can be used. That is, the radial clearance loss per axial drive-up can roughly be approximated as 71 µm/mm for a 1:12 tapered. Table 5 on page 24 provides a direct relation between suggested RIC (radial internal clearance) reduction due to installation and the corresponding axial displacement of the inner ring.

SETTING

To achieve appropriate operating clearance, attention must be paid to the effects that fitting practice and thermal gradients have within the bearing.

FITTING PRACTICE

- An interference fit between the inner ring and a solid steel shaft will reduce the radial clearance within the bearing by approximately 80 percent of the fit.

NOTE

It is critical to select the RIC that allows for this reduction.

- Spherical roller bearings with a tapered bore require a slightly greater interference fit on the shaft than a cylindrical bore bearing.

THERMAL GRADIENTS

- Thermal gradients within the bearing are primarily a function of the bearing rotational speed. As speed increases, thermal gradients increase, thermal growth occurs and the radial clearance is reduced.
- As a rule of thumb, radial clearance should be increased for speeds in excess of 70 percent of the speed rating.

For help selecting the correct radial internal clearance for your application, consult with your Timken engineer.

Radial internal clearance tolerances are listed in tables 4 and 5 for spherical roller bearings.

Spherical roller bearings are ordered with a specified standard or non-standard radial internal clearance value. The standard radial internal clearances are designated as C2, C0 (normal), C3, C4 or C5 and are in accordance with ISO 5753. C2 represents the minimum clearance and C5 represents the maximum clearance. Non-standardized values also are available by special request.

The clearance required for a given application depends on the desired operating precision, the rotational speed of the bearing, and the fitting practice used. SNT housings are commonly used with C0 or C3 clearance bearing, though other clearances may be ordered for specific applications. Typically, larger clearance reduces the operating load zone of the bearing, increases the maximum roller load, and reduces the bearing's expected life. However, a spherical roller bearing that has been put into a preload condition can experience premature bearing damage caused by excessive heat generation and/or material fatigue. As a general guideline, spherical roller bearings should not operate in a preloaded condition.

TABLE 4. RADIAL INTERNAL CLEARANCE LIMITS – SPHERICAL ROLLER BEARINGS – CYLINDRICAL BORE

Bore (Nominal)		Cylindrical Bore						Typical Reduction of RIC Due to Installation		Typical RIC After Installation
			Normal CO		C4					
			Min.	Max.	Min.	Max.				
		C2		C3		C5				
Over	Incl.	Min.	Max.	Min.	Max.	Min.	Max.	Min.	Max.	Min.
mm in.	mm in.	mm in.	mm in.	mm in.	mm in.	mm in.	mm in.	mm in.	mm in.	mm in.
20 0.9449	**30** 1.1811	**0.015** 0.0006	**0.025** 0.001	**0.04** 0.0016	**0.055** 0.0022	**0.075** 0.003	**0.095** 0.0037	**0.015** 0.0006	**0.02** 0.0008	**0.015** 0.0006
30 1.1811	**40** 1.5748	**0.015** 0.0006	**0.03** 0.0012	**0.045** 0.0018	**0.06** 0.0024	**0.08** 0.0031	**1** 0.0039	**0.02** 0.0008	**0.025** 0.001	**0.015** 0.0006
40 1.5748	**50** 1.9685	**0.02** 0.0008	**0.035** 0.0014	**0.055** 0.0022	**0.075** 0.003	**0.1** 0.0039	**0.125** 0.0049	**0.025** 0.001	**0.03** 0.0012	**0.02** 0.0008
50 1.9685	**65** 2.5591	**0.02** 0.0008	**0.04** 0.0016	**0.065** 0.0026	**0.09** 0.0035	**0.12** 0.0047	**0.15** 0.0059	**0.03** 0.0012	**0.038** 0.0015	**0.025** 0.001
65 2.5591	**80** 3.1496	**0.03** 0.0012	**0.05** 0.002	**0.08** 0.0031	**0.11** 0.0043	**0.145** 0.0057	**0.18** 0.0071	**0.038** 0.0015	**0.051** 0.002	**0.025** 0.001
80 3.1496	**100** 3.9370	**0.035** 0.0014	**0.06** 0.0024	**0.1** 0.0039	**0.135** 0.0053	**0.18** 0.0071	**0.225** 0.0089	**0.046** 0.0018	**0.064** 0.0025	**0.036** 0.0014
100 3.9370	**120** 4.7244	**0.04** 0.0016	**0.075** 0.003	**0.12** 0.0047	**0.16** 0.0063	**0.21** 0.0083	**0.26** 0.0102	**0.051** 0.002	**0.071** 0.0028	**0.051** 0.002
120 4.7244	**140** 5.5118	**0.05** 0.002	**0.095** 0.0037	**0.145** 0.0057	**0.19** 0.0075	**0.24** 0.0094	**0.3** 0.0118	**0.064** 0.0025	**0.089** 0.0035	**0.056** 0.0022
140 5.5118	**160** 6.2992	**0.06** 0.0024	**0.11** 0.0043	**0.17** 0.0067	**0.22** 0.0087	**0.28** 0.011	**0.35** 0.0138	**0.076** 0.003	**0.102** 0.004	**0.056** 0.0022
160 6.2992	**180** 7.0866	**0.065** 0.0026	**0.12** 0.0047	**0.18** 0.0071	**0.24** 0.0094	**0.31** 0.0122	**0.39** 0.0154	**0.076** 0.003	**0.114** 0.0045	**0.061** 0.0024
180 7.0866	**200** 7.8740	**0.07** 0.0028	**0.13** 0.0051	**0.2** 0.0079	**0.26** 0.0102	**0.34** 0.0134	**0.43** 0.0169	**0.089** 0.0035	**0.127** 0.005	**0.071** 0.0028
200 7.8740	**225** 8.8582	**0.08** 0.0031	**0.14** 0.0055	**0.22** 0.0087	**0.29** 0.0114	**0.38** 0.015	**0.47** 0.0185	**0.102** 0.004	**0.14** 0.0055	**0.076** 0.003
225 8.8582	**250** 9.8425	**0.09** 0.0035	**0.15** 0.0059	**0.24** 0.0094	**0.32** 0.0126	**0.42** 0.0165	**0.52** 0.0205	**0.114** 0.0045	**0.152** 0.006	**0.089** 0.0035
250 9.8425	**280** 11.0236	**0.1** 0.0039	**0.17** 0.0067	**0.26** 0.0102	**0.35** 0.0138	**0.46** 0.0181	**0.57** 0.0224	**0.114** 0.0045	**0.165** 0.0065	**0.102** 0.004
280 11.0236	**315** 12.4016	**0.11** 0.0043	**0.19** 0.0075	**0.28** 0.011	**0.37** 0.0146	**0.5** 0.0197	**0.63** 0.0248	**0.127** 0.005	**0.178** 0.007	**0.102** 0.004
315 12.4016	**355** 13.9764	**0.12** 0.0047	**0.2** 0.0079	**0.31** 0.0122	**0.41** 0.0161	**0.55** 0.0217	**0.69** 0.0272	**0.14** 0.0055	**0.19** 0.0075	**0.114** 0.0045
355 13.9764	**400** 15.7480	**0.13** 0.0051	**0.22** 0.0087	**0.34** 0.0134	**0.45** 0.0177	**0.6** 0.0236	**0.75** 0.0295	**0.152** 0.006	**0.203** 0.008	**0.127** 0.005
400 15.7480	**450** 17.7165	**0.14** 0.0055	**0.24** 0.0094	**0.37** 0.0146	**0.5** 0.0197	**0.66** 0.026	**0.82** 0.0323	**0.165** 0.0065	**0.216** 0.0085	**0.152** 0.006
450 17.7165	**500** 19.6850	**0.14** 0.0055	**0.26** 0.0102	**0.41** 0.0161	**0.55** 0.0217	**0.72** 0.0283	**0.9** 0.0354	**0.178** 0.007	**0.229** 0.009	**0.165** 0.0065
500 19.6850	**560** 22.0472	**0.15** 0.0059	**0.28** 0.011	**0.44** 0.0173	**0.6** 0.0236	**0.78** 0.0307	**1** 0.0394	**0.203** 0.008	**0.254** 0.01	**0.178** 0.007
560 22.0472	**630** 24.8031	**0.17** 0.0067	**0.31** 0.0122	**0.48** 0.0189	**0.65** 0.0256	**0.85** 0.0335	**1.1** 0.0433	**0.229** 0.009	**0.279** 0.011	**0.203** 0.008
630 24.8031	**710** 27.9528	**0.19** 0.0075	**0.35** 0.0138	**0.53** 0.0209	**0.7** 0.0276	**0.92** 0.0362	**1.19** 0.0469	**0.254** 0.01	**0.305** 0.012	**0.203** 0.008
710 27.9528	**800** 31.4961	**0.21** 0.0083	**0.39** 0.0154	**0.58** 0.0228	**0.77** 0.0303	**1.01** 0.0398	**1.3** 0.0512	**0.279** 0.011	**0.356** 0.014	**0.229** 0.009
800 31.4961	**900** 35.4331	**0.23** 0.0091	**0.43** 0.0169	**0.65** 0.0256	**0.86** 0.0339	**1.12** 0.0441	**1.44** 0.0567	**0.305** 0.012	**0.381** 0.015	**0.252** 0.01
900 35.4331	**1000** 39.3701	**0.26** 0.0102	**0.48** 0.0189	**0.71** 0.028	**0.93** 0.0366	**1.22** 0.048	**1.57** 0.0618	**0.356** 0.014	**0.432** 0.017	**0.279** 0.011

NOTE: Tolerance and shaft diameters are shown in the table as variances from nominal bearing bore.

TABLE 5. RADIAL INTERNAL CLEARANCE LIMITS – SPHERICAL ROLLER BEARINGS – TAPERED BORE

Bore (Nominal)		Tapered Bore						Suggested Reduction of RIC Due to Installation		Axial Displacement of Inner Ring for RIC Reduction – Tapered Shaft[1][2]				Suggested RIC After Installation[1]
			Normal CO		C4									
			Min.	Max.	Min.	Max.				Taper 1:12		Taper 1:30		
		C2		C3		C5								
Over	Incl.	Min.	Max.	Min.	Max.	Min.	Max.	Min.	Max.	Min.	Max.	Min.	Max.	Min.
mm in.	mm in.	mm in.	mm in.	mm in.	mm in.	mm in.	mm in.	mm in.	mm in.	mm in.	mm in.	mm in.	mm in.	mm in.
20 0.9449	**30** 1.1811	**0.02** 0.0008	**0.03** 0.0012	**0.04** 0.0016	**0.055** 0.0022	**0.075** 0.003	**0.095** 0.0037	**0.015** 0.0006	**0.02** 0.0008	**0.23** 0.0091	**0.30** 0.0118	–	–	**0.015** 0.0006
30 1.1811	**40** 1.5748	**0.025** 0.001	**0.035** 0.0014	**0.05** 0.002	**0.065** 0.0026	**0.085** 0.0033	**0.105** 0.0041	**0.02** 0.0008	**0.025** 0.001	**0.30** 0.0118	**0.38** 0.0150	–	–	**0.015** 0.0006
40 1.5748	**50** 1.9685	**0.03** 0.0012	**0.045** 0.0018	**0.06** 0.0024	**0.08** 0.0031	**0.1** 0.0039	**0.13** 0.0051	**0.025** 0.001	**0.03** 0.0012	**0.38** 0.0150	**0.46** 0.0181	–	–	**0.02** 0.0008
50 1.9685	**65** 2.5591	**0.04** 0.0016	**0.055** 0.0022	**0.075** 0.003	**0.095** 0.0037	**0.12** 0.0047	**0.16** 0.0063	**0.03** 0.0012	**0.038** 0.0015	**0.46** 0.0181	**0.56** 0.0220	–	–	**0.025** 0.001
65 2.5591	**80** 3.1496	**0.05** 0.002	**0.07** 0.0028	**0.095** 0.0037	**0.12** 0.0047	**0.15** 0.0059	**0.2** 0.0079	**0.038** 0.0015	**0.051** 0.002	**0.56** 0.0220	**0.76** 0.0299	–	–	**0.025** 0.001
80 3.1496	**100** 3.9370	**0.055** 0.0022	**0.08** 0.003	**0.11** 0.0043	**0.14** 0.0055	**0.18** 0.0071	**0.23** 0.0091	**0.046** 0.0018	**0.064** 0.0025	**0.68** 0.0268	**0.97** 0.0382	–	–	**0.036** 0.0014
100 3.9370	**120** 4.7244	**0.065** 0.0026	**0.1** 0.0039	**0.135** 0.0053	**0.17** 0.0067	**0.22** 0.0087	**0.28** 0.011	**0.051** 0.002	**0.071** 0.0028	**0.76** 0.0299	**1.07** 0.0421	**1.90** 0.0748	**2.54** 0.1000	**0.051** 0.002
120 4.7244	**140** 5.5118	**0.08** 0.0031	**0.12** 0.0047	**0.16** 0.0063	**0.2** 0.0079	**0.26** 0.0102	**0.33** 0.013	**0.064** 0.0025	**0.089** 0.0035	**0.89** 0.0350	**1.27** 0.0500	**2.29** 0.0902	**3.05** 0.1201	**0.056** 0.0022
140 5.5118	**160** 6.2992	**0.09** 0.0035	**0.13** 0.0051	**0.18** 0.0071	**0.23** 0.0091	**0.3** 0.0118	**0.38** 0.015	**0.076** 0.003	**0.102** 0.004	**1.14** 0.0449	**1.52** 0.0598	**2.67** 0.1051	**3.43** 0.1350	**0.056** 0.0022
160 6.2992	**180** 7.0866	**0.1** 0.0039	**0.14** 0.0055	**0.2** 0.0079	**0.26** 0.0102	**0.34** 0.0134	**0.43** 0.0169	**0.076** 0.003	**0.114** 0.0045	**1.14** 0.0449	**1.65** 0.0650	**2.67** 0.1051	**4.06** 0.1598	**0.061** 0.0024
180 7.0866	**200** 7.8740	**0.11** 0.0043	**0.16** 0.0063	**0.22** 0.0087	**0.29** 0.0114	**0.37** 0.0146	**0.47** 0.0185	**0.089** 0.0035	**0.127** 0.005	**1.40** 0.0551	**1.90** 0.0748	**3.05** 0.1201	**4.45** 0.1752	**0.071** 0.0028
200 7.8740	**225** 8.8582	**0.12** 0.0047	**0.18** 0.0071	**0.25** 0.0098	**0.32** 0.0126	**0.41** 0.0161	**0.52** 0.0205	**0.102** 0.004	**0.14** 0.0055	**1.52** 0.0598	**2.03** 0.0799	**3.56** 0.1402	**4.83** 0.1902	**0.076** 0.003
225 8.8582	**250** 9.8425	**0.14** 0.0055	**0.2** 0.0079	**0.27** 0.0106	**0.35** 0.0138	**0.45** 0.0177	**0.57** 0.0224	**0.114** 0.0045	**0.152** 0.006	**1.78** 0.0701	**2.29** 0.0902	**4.06** 0.1598	**5.33** 0.2098	**0.089** 0.0035
250 9.8425	**280** 11.0236	**0.15** 0.0059	**0.22** 0.0087	**0.3** 0.0118	**0.39** 0.0154	**0.49** 0.0193	**0.62** 0.0244	**0.114** 0.0045	**0.165** 0.0065	**1.78** 0.0701	**2.54** 0.1000	**4.06** 0.1598	**5.84** 0.2299	**0.102** 0.004
280 11.0236	**315** 12.4016	**0.17** 0.0067	**0.24** 0.0094	**0.33** 0.013	**0.43** 0.0169	**0.54** 0.0213	**0.68** 0.0268	**0.127** 0.005	**0.178** 0.007	**1.90** 0.0748	**2.67** 0.1051	**4.45** 0.1752	**6.22** 0.2449	**0.102** 0.004
315 12.4016	**355** 13.9764	**0.19** 0.0075	**0.27** 0.0106	**0.36** 0.0142	**0.47** 0.0185	**0.59** 0.0232	**0.74** 0.0291	**0.14** 0.0055	**0.19** 0.0075	**2.03** 0.0799	**2.79** 0.1098	**4.83** 0.1902	**6.60** 0.2598	**0.114** 0.0045
355 13.9764	**400** 15.7480	**0.21** 0.0083	**0.3** 0.0118	**0.4** 0.0157	**0.52** 0.0205	**0.65** 0.0256	**0.82** 0.0323	**0.152** 0.006	**0.203** 0.008	**2.29** 0.0902	**3.05** 0.1201	**5.33** 0.2098	**7.11** 0.2799	**0.127** 0.005
400 15.7480	**450** 17.7165	**0.23** 0.0091	**0.33** 0.013	**0.44** 0.0173	**0.57** 0.0224	**0.72** 0.0283	**0.91** 0.0358	**0.165** 0.0065	**0.216** 0.0085	**2.54** 0.1000	**3.3** 0.1299	**5.84** 0.2299	**7.62** 0.3000	**0.152** 0.006
450 17.7165	**500** 19.6850	**0.26** 0.0102	**0.37** 0.0146	**0.49** 0.0193	**0.63** 0.0248	**0.79** 0.0311	**1** 0.0394	**0.178** 0.007	**0.229** 0.009	**2.67** 0.1051	**3.43** 0.1350	**6.22** 0.2449	**8.00** 0.3150	**0.165** 0.0065
500 19.6850	**560** 22.0472	**0.29** 0.0114	**0.41** 0.0161	**0.54** 0.0213	**0.68** 0.0268	**0.87** 0.0343	**1.1** 0.0433	**0.203** 0.008	**0.254** 0.01	**3.05** 0.1201	**3.81** 0.1500	**7.11** 0.2799	**8.89** 0.3500	**0.178** 0.007
560 22.0472	**630** 24.8031	**0.32** 0.0126	**0.46** 0.0181	**0.6** 0.0236	**0.76** 0.0299	**0.98** 0.0386	**1.23** 0.0484	**0.229** 0.009	**0.279** 0.011	**3.43** 0.1350	**4.19** 0.1650	**8.00** 0.3150	**9.78** 0.3850	**0.203** 0.008
630 24.8031	**710** 27.9528	**0.35** 0.0138	**0.51** 0.0201	**0.67** 0.0264	**0.85** 0.0335	**1.09** 0.0429	**1.36** 0.0535	**0.254** 0.01	**0.305** 0.012	**3.81** 0.1500	**4.57** 0.1799	**8.89** 0.3500	**10.67** 0.4201	**0.203** 0.008
710 27.9528	**800** 31.4961	**0.39** 0.0154	**0.57** 0.0224	**0.75** 0.0295	**0.96** 0.0378	**1.22** 0.048	**1.5** 0.0591	**0.279** 0.011	**0.356** 0.014	**4.19** 0.1650	**5.33** 0.2098	**9.78** 0.3850	**12.45** 0.4902	**0.229** 0.009
800 31.4961	**900** 35.4331	**0.44** 0.0173	**0.64** 0.0252	**0.84** 0.0331	**1.07** 0.0421	**1.37** 0.0539	**1.69** 0.0665	**0.305** 0.012	**0.381** 0.015	**4.57** 0.1799	**5.72** 0.2252	**10.67** 0.4201	**13.33** 0.5248	**0.252** 0.01
900 35.4331	**1000** 39.3701	**0.49** 0.0193	**0.71** 0.028	**0.93** 0.0366	**1.19** 0.0469	**1.52** 0.0598	**1.86** 0.0732	**0.356** 0.014	**0.432** 0.017	**5.33** 0.2100	**6.48** 0.2551	**12.45** 0.4902	**15.11** 0.5949	**0.279** 0.011

[1]This displacement is valid for assembly of tapered bore bearings and is measured starting from a line-to-line fit of the bearing bore to the tapered shaft.

[2]1:12 Taper used for 222, 223, 230, 231, 232, 233, 239 series. 1:30 Taper used for 240, 241, 242 series. For sleeve mounting, multiply axial displacement values by 1.1 for 1:12 Taper or by 1.05 for 1:30 Taper. For questions on tapered shaft data, consult your Timken engineer.

NOTE: Axial displacement values apply to solid steel shafts or hollow shafts with bore diameter less than half the shaft diameter. For shaft materials other than steel, or for thin-walled shafts, please consult your Timken engineer.

NOTE: Tolerance and shaft diameters are shown in the table as variances from nominal bearing bore.

EXAMPLE #1 –
Calculating RIC Reduction Using a Spherical Roller Bearing with Tapered Bore

Given bearing number 22328K C3 (140 mm bore with C3 clearance) is to be mounted on a tapered shaft. Using a set of feeler gages, RIC is measured at (see fig. 3):

RIC = 0.178 mm

Suggested reduction of RIC due to installation = 0.064 mm – 0.089 mm, found in table 5 on page 24.

Calculate the clearance after mounting (see fig. 4):

0.178 mm – 0.076 mm = 0.102 mm

For this example, the value of 0.076 mm was obtained by taking the mid-range value of the upper and lower limits found in the tables on page 24.

Fig. 3. Measure RIC before installation.

Fig. 4. During mounting, the RIC should be checked at the unloaded roller.

Therefore, the locknut should be tightened until RIC reaches 0.102 mm.

It also should be noted that the value obtained by reading the suggested RIC after installation directly from the table is 0.056 mm. This differs from the value calculated in the example. The value taken directly from the table is provided as a minimum value. It is not suggested to use a calculated value that falls below this minimum.

EXAMPLE #2 –
Calculating RIC Reduction Using a Spherical Roller Bearing with Cylindrical Bore

Observations:

- Bearing 22230EM, nominal 150 mm bore and 270 mm O.D., standard class, operating at 1200 RPM.
- Float bearing position so the stationary O.D. should be free to move in SNT housing, with the locating ring removed.
- With shaft/inner ring rotation and the moderate loading 0.09C, the bore should be tight fit.

We can use the nominal fit charts in table 6 on page 29 (shaft fit) to help guide our ISO fit selection.

Shaft Fit at 150 mm Bore: ISO p6

From the shaft fit chart at 150 mm nominal bore at p6 (table 8, page 34), the shaft tolerance is nominal +0.043 to +0.068 mm. Therefore we have the following bore range:

max. shaft = 150.068 mm
min. shaft = 150.043 mm

This yields a shaft fit:

max. fit = max. shaft - min. bore
= 150.068 - 149.075
= 0.093 mm tight

min. fit = min. shaft - max. bore
= 150.043 - 150.000
= 0.043 mm tight

For the primary selection of RIC, the major parameters are the bearing speed and the fits. For our example, we know that the shaft fit is 0.043 mm tight to 0.093 mm tight. We know the housing fit is loose. We also know that the bearing speed is 1200 RPM or 60 percent of the speed rating.

As a general rule of thumb, we increase the clearance for operating speeds that exceed 70 percent of the speed rating, due to concerns over internal heat generation and thermal growth. In this case, we are at 60 percent of the speed rating, so normal clearance, ISO CO or the SNT standard C3, can be selected.

Observing the RIC chart on page 23, we find for 150 mm nominal bore at CO, the RIC will be 0.110 mm to 0.170 mm. We also note that the minimum recommended RIC (installed) is 0.056 mm.

Also from page 23, we note that we get an approximate reduction of RIC that is 80 percent of interference fit on a solid housing. Since we have a loose housing fit, there will be no RIC reduction from that fit.

Shaft fit RIC reductions and clearance:

For a 150 mm nominal bore at C3, the RIC will be 0.115 mm to 0.165 mm. Recalculating shaft fit RIC reduction and clearance:

max. clearance = max. RIC - min. fit reduction
= 0.165 - 0.034 = 0.131 mm

min. clearance = min. RIC - max. fit reduction
= 0.115 - 0.074 = 0.041 mm

Since the minimum mounted clearance is less than the minimum suggested RIC of 0.056 mm, the C3 RIC clearance limit needs to be reevaluated.

INSTALLATION

When using a tight fit inner ring, the method of assembly will depend on whether the bearing has a cylindrical or tapered bore.

CLEANLINESS

- Choose a clean environment, free from dust and moisture.
- The installer should make every effort to ensure cleanliness by use of protective screens and clean cloths.

PLAN THE WORK

- Know your plans in advance and have the necessary tools at hand. This reduces the amount of time for the job and decreases the chance for contamination to get into the bearing.

INSPECTION AND PREPARATION

- All component parts of the machine should be on hand and thoroughly cleaned before proceeding.
- Housings should be cleaned, including blowing out the oil holes.
- Do not use an air hose on bearings.
- If blind holes are used, insert a magnetic rod to remove metal chips that might be lodged there during fabrication.
- Shaft shoulders and spacer rings contacting the bearing should be square with the shaft axis.
- The shaft fillet must be small enough to clear the radius of the bearing.
- On original installations, all component parts should be checked against the detail specification prints for dimensional accuracy. Shaft and housing should be carefully checked for size and form (roundness, etc.).

⚠ WARNING

Failure to observe the following warnings could create a risk of death or serious injury.

Proper maintenance and handling practices are critical. Always follow installation instructions and maintain proper lubrication.

Never spin a bearing with compressed air. The components may be forcefully expelled.

⚠ CAUTION

Failure to follow these cautions could create a risk of injury.

Remove oil or rust inhibitor from parts before heating, to avoid fire and fumes.

SHAFT AND HOUSING FINISH

- Shaft surfaces on which the bearing will be mounted must be clean and free from nicks and burrs.
- For applications with stationary housing and rotating shaft, it is suggested that the bearing seat on the shaft be ground to 1.6 µm (65 µin.) Ra maximum.
- If it is impractical to use a ground finish, a machined finish of 3.2 µm (125 µin.) Ra is acceptable in many cases, but the amount of interference fit should be slightly increased.

INSTALLING CYLINDRICAL BORE BEARINGS

Heat expansion method

- Most applications require a tight interference fit on the shaft.
- Mounting is simplified by heating the bearing to expand it sufficiently to slide easily onto the shaft.
- Two methods of heating are commonly used:

1. Tank of heated oil.
   - Accomplished by heating the bearing in a tank of oil that has a high flash point (see fig. 5).
   - The oil temperature should not be allowed to exceed 121° C (250° F). A temperature of 93° C (200° F) is sufficient for most applications.
   - The bearing should be heated for 20 or 30 minutes, or until it is expanded sufficiently to slide onto the shaft easily.
   - The oil bath is shown in fig. 5. The bearing should not be in direct contact with the heat source.
   - The usual arrangement is to have a screen several inches from the bottom of the tank. Small support blocks separate the bearing from the screen.
   - It is important to keep the bearing away from any localized high-heat source that may raise its temperature excessively, resulting in metallurgical property changes such as in ring hardness reduction.
   - Flame-type burners are commonly used. An automatic device for temperature control is desirable.
   - If safety regulations prevent the use of an open heated oil bath, a mixture of 15 percent soluble-oil water may be used. This mixture may be heated to a maximum of 93° C (200° F) without being flammable.

2. Induction heating.
   - The induction heating process can be used for mounting bearings.
   - Induction heating is rapid. Care must be taken to prevent bearing temperature from exceeding 93° C (200° F).
   - Trial runs with the unit and bearing are usually necessary to obtain proper timing.
- Thermal crayons melted at predetermined temperatures or thermal gun can be used to check the bearing temperature.
- While the bearing is hot, it should be positioned squarely against the shoulder.
- Lockwashers and locknuts or clamping plates are then installed to hold the bearing against the shoulder of the shaft.
- As the bearing cools, the locknut or clamping plate should be tightened.
- For more information see the Timken Spherical Roller Bearing Catalog (order no. 10446), found on www.timken.com.

NOTE

Never use steam or hot water when cleaning the bearings because these methods can create rust or corrosion.

Never expose any surface of a bearing to the flame of a torch.

Do not heat bearing beyond 149° C (300° F).

Arbor press method

- An alternate method of mounting, generally used only on smaller size bearings, is to press the bearing onto the shaft or into the housing. This can be done by using an arbor press and a mounting tube as shown in fig. 6.
- The tube should be made from soft steel with an inside diameter slightly larger than the shaft.
- The O.D. of the tube should not exceed the shaft backing diameter given in the Timken Spherical Roller Bearing Catalog (order no. 10446), found on www.timken.com.
- The tube should be faced square at both ends. It should be thoroughly clean inside and out, and long enough to clear the end of the shaft after the bearing is mounted.
- If the outer ring is being pressed into the housing, the O.D. of the mounting tube should be slightly smaller than the housing bore. The I.D. should not be less than the suggested housing backing diameter in the table of dimensions available in the Timken Spherical Roller Bearing Catalog (order no. 10446), found on www.timken.com.
- Coat the shaft with a light machine oil to reduce the force needed for a press fit.
- Carefully place the bearing on the shaft, making sure it is square with the shaft axis.
- Apply steady pressure from the arbor ram to drive the bearing firmly against the shoulder.

NOTE

Never attempt a press fit on a shaft by applying pressure to the outer ring or a press fit in a housing by applying pressure to the inner ring.

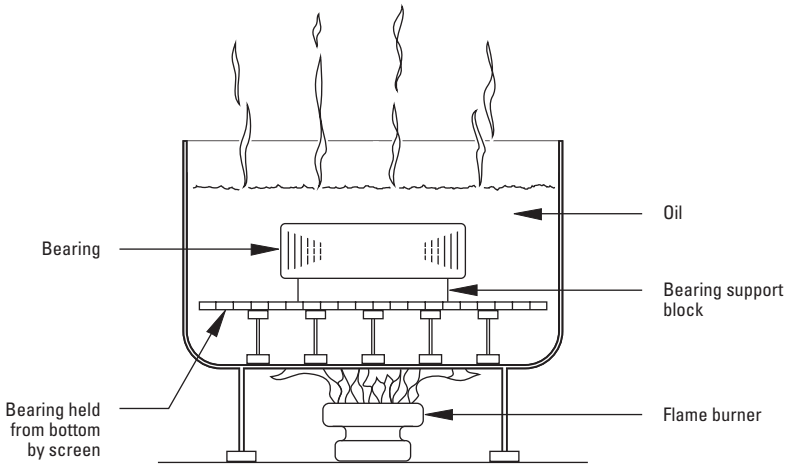

Fig. 5. Heat expansion method.

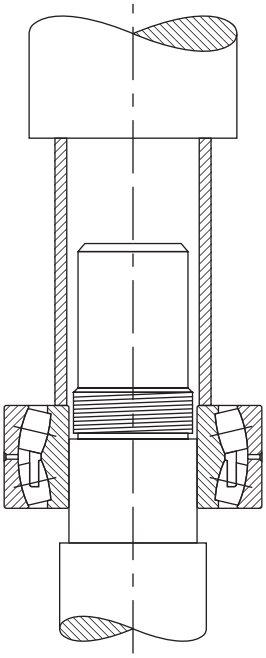

Fig. 6. Arbor press method.

Mounting tapered bore spherical roller bearings

- Use a feeler gage with the thinnest blade of 0.038 mm.
- Place the bearing in an upright position with the inner and outer ring faces parallel.
- Place thumbs on the inner ring bore and oscillate the inner ring the distance of two or three roller spacings.
- Position the individual roller assemblies so that a roller is at the top of the inner ring on both sides of the bearing.
- With the roller in the correct position, insert a thin blade of the feeler gage between the roller and the outer ring, as shown in fig. 7.
- Move the feeler gage carefully along the top roller between the roller and outer ring raceway. Repeat this procedure using thicker feeler gage blades until one is found that will not go through.
- The blade thickness that preceded the no-go blade is a measure of RIC before installation.
- Start the mounting procedure by lubricating the tapered shaft with a light coat of machine oil.
- Slide the bearing onto the shaft as far as it will go by hand.
- As the locknut is tightened, the interference fit builds up, resulting in expansion of the inner ring.
- Periodically measure to monitor the reduction in RIC.
- Continue the procedure until the proper amount of reduction is obtained. Do not exceed calculated amount of reduction.
- As a final check, make sure the remaining RIC equals or exceeds the minimum mounted clearance shown in table 5 on page 24.
- During mounting, the RIC should be checked at the unloaded roller. If this is at the bottom, make sure that the roller is raised to seat firmly at the inboard position of the inner ring.
- When the suggested amount of RIC reduction has been accomplished, the bearing is properly fitted.
- Complete the procedure by peening the lockwasher tang into the locknut slot or securing the lockplate.

Fig. 7. Measure RIC before installation.

SHAFT FITS FOR CYLINDRICAL BORE BEARINGS

This chart is a guideline for specifying shaft fits related to particular operating conditions. Please contact your Timken engineer for more information.

TABLE 6. RADIAL SPHERICAL ROLLER BEARING SHAFT FITS

	Conditions	Examples	Shaft Dia.		Tolerance Symbol[1]	Remarks
			mm in.			
Stationary inner ring load	The inner ring not to be easily displaced on the shaft	Wheel on non-rotating shaft	All diameters		g6	
		Tension pulleys and rope sheaves			h6	
Rotating inner ring load or indeterminate load direction	Light and variable loads P ≤ 0.07C	Electrical apparatus, machine tools, pumps, ventilators, industrial trucks	over	incl.	k6	In very accurate applications, k5 and m5 are used instead of k6 and m6 respectively.
			18 0.7087	**100** 3.9370		
			100 3.9370	**200** 7.8740	m6	
	Normal and heavy loads P > 0.07C ≤ 0.25C	Applications in general, electrical motors, turbines, pumps, combustion engines, gear transmissions, woodworking machines	**18** 0.7087	**65** 2.5590	m5	
			65 2.5590	**100** 3.9370	m6	
			100 3.9370	**140** 5.5118	n6	
			140 5.5118	**280** 11.0236	p6	
			280 11.0236	**500** 19.6850	r6	
			500 19.6850	**and up**	r7	
	Very heavy loads and shock loads P > 0.25C	Journal boxes for locomotives and other heavy rail vehicles, traction motors	**18** 0.7087	**65** 2.5590	m6	Bearings with greater clearance than normal must be used.
			65 2.5590	**100** 3.9370	n6	
			100 3.9370	**140** 5.5118	p6	
			140 5.5118	**200** 7.8740	r6	
			200 7.8740	**500** 19.6850	r7	
BEARINGS WITH TAPERED BORE AND ADAPTER SLEEVE						
	All loads	Applications in general	All diameters			See tables for Reduction of RIC on pages 23 and 24.

[1]For solid steel shaft. See tables on pages 30 through 35 for tolerance value.
NOTE: Tolerance and shaft diameters are shown in the table as variances from nominal bearing bore.

These charts are guidelines for specifying shaft and housing fits related to particular operating conditions in table 6 on page 29.

FITTING PRACTICE TABLES

TABLE 7. SPHERICAL ROLLER BEARINGS - SHAFT TOLERANCES (CLASSES g6, h5, h6, j5, j6, k5, k6, m5)

Bearing Bore			g6			h6			h5			j5		
Nominal (Max.)		Tolerance[1]	Shaft Dia.		Fit	Shaft Dia.		Fit	Shaft Dia.		Fit	Shaft Dia.		Fit
Over	Incl.		Max.	Min.		Max.	Min.		Max.	Min.		Max.	Min.	
mm in.	mm in.	mm in.	mm in.	mm in.	mm in.	mm in.	mm in.	mm in.	mm in.	mm in.	mm in.	mm in.	mm in.	mm in.
30.000 1.1811	**50.000** 1.9685	**-0.014** -0.0006	**-0.009** -0.0004	**-0.025** -0.0010	**0.025L** **0.003T** 0.0010L 0.0001T	**0.000** 0.0000	**-0.016** -0.0006	**0.016L** **0.012T** 0.0006L 0.0005T	–	–	–	**+0.006** +0.0002	**-0.005** -0.0002	**0.005L** **0.018T** 0.0002L 0.0007T
50.000 1.9685	**80.000** 3.1496	**-0.015** -0.0006	**-0.010** -0.0004	**-0.029** -0.0011	**0.029L** **0.005T** 0.0011L 0.0002T	**0.000** 0.0000	**-0.019** -0.0007	**0.019L** **0.015T** 0.0007L 0.0006T	–	–	–	**+0.006** +0.0002	**-0.007** -0.0003	**0.007L** **0.021T** 0.0003L 0.0008T
80.000 3.1496	**120.000** 4.7244	**-0.020** -0.0008	**-0.012** -0.0005	**-0.034** -0.0013	**0.034L** **0.008T** 0.0013L 0.0003T	**0.000** 0.0000	**-0.022** -0.0009	**0.022L** **0.020T** 0.0009L 0.0008T	–	–	–	**+0.006** +0.0002	**-0.009** -0.0004	**0.009L** **0.026T** 0.0004L 0.0010T
120.000 4.7244	**180.000** 7.0866	**-0.025** -0.0010	**-0.014** -0.0006	**-0.039** -0.0015	**0.039L** **0.011T** 0.0015L 0.0004T	**0.000** 0.0000	**-0.025** -0.0010	**0.025L** **0.025T** 0.0010L 0.0010T	–	–	–	**+0.007** +0.0003	**-0.011** -0.0004	**0.011L** **0.032T** 0.0004L 0.0013T
180.000 7.0866	**200.000** 7.8740	**-0.030** -0.0012	**-0.015** -0.0006	**-0.044** -0.0017	**0.044T** **0.015T** 0.0017L 0.0006T	**0.000** 0.0000	**-0.029** -0.0011	**0.029L** **0.030T** 0.0011L 0.0012T	–	–	–	**+0.007** +0.0003	**-0.013** -0.0005	**0.013L** **0.037T** 0.0005L 0.0015T
200.000 7.8740	**225.000** 8.8583	**-0.030** -0.0012	**-0.015** -0.0006	**-0.044** -0.0017	**0.044T** **0.015T** 0.0017L 0.0006T	**0.000** 0.0000	**-0.029** -0.0011	**0.029L** **0.030T** 0.0011L 0.0012T	–	–	–	**+0.007** +0.0003	**-0.013** -0.0005	**0.013L** **0.037T** 0.0005L 0.0015T
225.000 8.8583	**250.000** 9.8425	**-0.030** -0.0012	**-0.015** -0.0006	**-0.044** -0.0017	**0.044T** **0.015T** 0.0017L 0.0006T	**0.000** 0.0000	**-0.029** -0.0011	**0.029L** **0.030T** 0.0011L 0.0012T	–	–	–	**+0.007** +0.0003	**-0.013** -0.0005	**0.013L** **0.037T** 0.0005L 0.0015T
250.000 9.8425	**280.000** 11.0236	**-0.035** -0.0014	**-0.017** -0.0007	**-0.049** -0.0019	**0.049L** **0.018T** 0.0019L 0.0007T	**0.000** 0.0000	**-0.032** -0.0013	**0.032L** **0.035T** 0.0013L 0.0014T	–	–	–	**+0.007** +0.0003	**-0.016** -0.0006	**0.016L** **0.042T** 0.0006L 0.0017T
280.000 11.0236	**315.000** 12.4016	**-0.035** -0.0014	**-0.017** -0.0007	**-0.049** -0.0019	**0.049L** **0.018T** 0.0019L 0.0007T	**0.000** 0.0000	**-0.032** -0.0013	**0.032L** **0.035T** 0.0013L 0.0014T	–	–	–	**+0.007** +0.0003	**-0.016** -0.0006	**0.016L** **0.042T** 0.0006L 0.0017T
315.000 12.4016	**355.000** 13.9764	**-0.040** -0.0016	**-0.018** -0.0007	**-0.054** -0.0021	**0.054L** **0.022T** 0.0021L 0.0009T	**0.000** 0.0000	**-0.036** -0.0014	**0.036L** **0.040T** 0.0014L 0.0016T	–	–	–	**+0.007** +0.0003	**-0.018** -0.0007	**0.018L** **0.047T** 0.0007L 0.0019T

[1]Tolerance range is from +0 to value listed.
NOTE: Tolerance and shaft diameters are shown in the table as variances from nominal bearing bore.

These charts are guidelines for specifying shaft and housing fits related to particular operating conditions in table 6 on page 29.

j6			k5			k6			m5		
Shaft Dia.		Fit	Shaft Dia.		Fit	Shaft Dia.		Fit	Shaft Dia.		Fit
Max.	Min.		Max.	Min.		Max.	Min.		Max.	Min.	
mm in.	**mm** in.	**mm** in.	**mm** in.	**mm** in.	**mm** in.	**mm** in.	**mm** in.	**mm** in.	**mm** in.	**mm** in.	**mm** in.
		0.005L			**0.002T**			**0.002T**			**0.009T**
+0.011	**-0.005**	**0.023T**	**+0.013**	**+0.002**	**0.025T**	**+0.018**	**+0.002**	**0.030T**	**+0.020**	**+0.009**	**0.032T**
+0.0004	-0.0002	0.0002L	+0.0005	+0.0001	0.0001T	+0.0007	+0.0001	0.0001T	+0.0008	+0.0004	0.0004T
		0.00085T			0.0010T			0.0012T			0.00125T
		0.007L			**0.002T**			**0.002T**			**0.011T**
+0.012	**-0.007**	**0.027T**	**+0.015**	**+0.002**	**0.030T**	**+0.021**	**+0.002**	**0.036T**	**+0.024**	**+0.011**	**0.039T**
+0.0005	-0.0003	0.0003L	+0.0006	+0.0001	0.0001T	+0.0008	+0.0001	0.0001T	+0.0009	+0.0004	0.0004T
		0.0011T			0.0012T			0.0014T			0.0015T
		0.009L			**0.003T**			**0.003T**			**0.013T**
+0.013	**-0.009**	**0.033T**	**+0.018**	**+0.003**	**0.038T**	**+0.025**	**+0.003**	**0.045T**	**+0.028**	**+0.013**	**0.048T**
+0.0005	-0.0004	0.0004L	+0.0007	+0.0001	0.0001T	+0.0010	+0.0001	0.0001T	+0.0011	+0.0005	0.0005T
		0.0013T			0.0015T			0.0018T			0.0019T
		0.011L			**0.003T**			**0.003T**			**0.015T**
+0.014	**-0.011**	**0.039T**	**+0.021**	**+0.003**	**0.046T**	**+0.028**	**+0.003**	**0.053T**	**+0.033**	**+0.015**	**0.058T**
+0.0006	-0.0004	0.0004L	+0.0008	+0.0001	0.0001T	+0.0011	+0.0001	0.0001T	+0.0013	+0.0006	0.0006T
		0.0016T			0.0018T			0.0021T			0.0023T
		0.013L			**0.004T**						**0.017T**
+0.016	**-0.013**	**0.046T**	**+0.024**	**+0.004**	**0.054T**	–	–	–	**+0.037**	**+0.017**	**0.067T**
+0.0006	-0.0005	0.0005L	+0.0009	+0.0002	0.0002T				+0.0015	+0.0007	0.0007T
		0.0018T			0.0021T						0.0027T
		0.013L			**0.004T**						**0.017T**
+0.016	**-0.013**	**0.046T**	**+0.024**	**+0.004**	**0.054T**	–	–	–	**+0.037**	**+0.017**	**0.067T**
+0.0006	-0.0005	0.0005L	+0.0009	+0.0002	0.0002T				+0.0015	+0.0007	0.0007T
		0.0018T			0.0021T						0.0027T
		0.013L			**0.004T**						**0.017T**
+0.016	**-0.013**	**0.046T**	**+0.024**	**+0.004**	**0.054T**	–	–	–	**+0.037**	**+0.017**	**0.067T**
+0.0006	-0.0005	0.0005L	+0.0009	+0.0002	0.0002T				+0.0015	+0.0007	0.0007T
		0.0018T			0.0021T						0.0027T
		0.016L			**0.004T**						**0.020T**
+0.016	**-0.016**	**0.051T**	**+0.027**	**+0.004**	**0.062T**	–	–	–	**+0.043**	**+0.020**	**0.078T**
+0.0006	-0.0006	0.0006L	+0.0011	+0.0002	0.0002T				+0.0017	+0.0008	0.0008T
		0.0020T			0.0025T						0.0031T
		0.016L			**0.004T**						**0.020T**
+0.016	**-0.016**	**0.051T**	**+0.027**	**+0.004**	**0.062T**	–	–	–	**+0.043**	**+0.020**	**0.078T**
+0.0006	-0.0006	0.0006L	+0.0011	+0.0002	0.0002T				+0.0017	+0.0008	0.0008T
		0.0020T			0.0025T						0.0031T
		0.018L			**0.004T**						**0.021T**
+0.018	**-0.018**	**0.058T**	**+0.029**	**+0.046**	**0.069T**	–	–	–	**+0.046**	**+0.021**	**0.086T**
+0.0007	-0.0007	0.0007L	+0.0011	+0.0002	0.0002T				+0.0018	+0.0008	0.0008T
		0.0023T			0.0027T						0.0034T

[1] Tolerance range is from +0 to value listed.

NOTE: Tolerance and shaft diameters are shown in the table as variances from nominal bearing bore.

Continued on next page.

These charts are guidelines for specifying shaft and housing fits related to particular operating conditions in table 6 on page 29.

TABLE 7. SPHERICAL ROLLER BEARINGS - SHAFT TOLERANCES (CLASSES g6, h5, h6, j5, j6, k5, k6, m5) *– continued*

Bearing Bore			g6			h6			h5			j5		
Nominal (Max.)		Tolerance[1]	Shaft Dia.		Fit	Shaft Dia.		Fit	Shaft Dia.		Fit	Shaft Dia.		Fit
Over	Incl.		Max.	Min.		Max.	Min.		Max.	Min.		Max.	Min.	
mm in.	**mm** in.	**mm** in.	**mm** in.	**mm** in.	**mm** in.	**mm** in.	**mm** in.	**mm** in.	**mm** in.	**mm** in.	**mm** in.	**mm** in.	**mm** in.	**mm** in.
					0.054L			**0.036L**						**0.018L**
355.000	**400.000**	**-0.040**	**-0.018**	**-0.054**	**0.022T**	**0.000**	**-0.036**	**0.040T**	–	–	–	**+0.007**	**-0.018**	**0.047T**
13.9764	15.7480	-0.0016	-0.0007	-0.0021	0.0021L	0.0000	-0.0014	0.0014L				+0.0003	-0.0007	0.0007L
					0.0009T			0.0016T						0.0019T
					0.060L			**0.040L**						**0.020L**
400.000	**450.000**	**-0.045**	**-0.020**	**-0.060**	**0.025T**	**0.000**	**-0.040**	**0.045T**	–	–	–	**+0.007**	**-0.020**	**0.052T**
15.7480	17.7165	-0.0018	-0.0008	-0.0024	0.0024L	0.0000	-0.0016	0.0016L				+0.0003	-0.0008	0.0008L
					0.0010T			0.0018T						0.0021T
					0.060L			**0.040L**						**0.020L**
450.000	**500.000**	**-0.045**	**-0.020**	**-0.060**	**0.025T**	**0.000**	**-0.040**	**0.045T**	–	–	–	**+0.007**	**-0.020**	**0.052T**
17.7165	19.6850	-0.0018	-0.0008	-0.0024	0.0024L	0.0000	-0.0016	0.0016L				+0.0003	-0.0008	0.0008L
					0.0010T			0.0018T						0.0020T

[1]Tolerance range is from +0 to value listed.
NOTE: Tolerance and shaft diameters are shown in the table as variances from nominal bearing bore.

These charts are guidelines for specifying shaft and housing fits related to particular operating conditions in table 6 on page 29.

j6			k5			k6			m5		
Shaft Dia.		Fit	Shaft Dia.		Fit	Shaft Dia.		Fit	Shaft Dia.		Fit
Max.	Min.		Max.	Min.		Max.	Min.		Max.	Min.	
mm in.	**mm** in.	**mm** in.	**mm** in.	**mm** in.	**mm** in.	**mm** in.	**mm** in.	**mm** in.	**mm** in.	**mm** in.	**mm** in.
		0.018L			**0.004T**						**0.021T**
+0.018	**-0.018**	**0.058T**	**+0.029**	**+0.004**	**0.069T**	–	–	–	**+0.046**	**+0.021**	**0.086T**
+0.0007	-0.0007	0.0007L	+0.0011	+0.0002	0.0002T				+0.0018	+0.0008	0.0008T
		0.0023T			0.0027T						0.0034T
		0.020L			**0.005T**						**0.023T**
+0.020	**-0.020**	**0.065T**	**+0.032**	**+0.005**	**0.077T**	–	–	–	**+0.050**	**+0.023**	**0.095T**
+0.0008	-0.0008	0.0008L	+0.0013	+0.0002	0.0002T				+0.0020	+0.0009	0.0009T
		0.0026T			0.0031T						0.0037T
		0.020L			**0.005T**						**0.023T**
+0.020	**-0.020**	**0.065T**	**+0.032**	**+0.005**	**0.077T**	–	–	–	**+0.050**	**+0.023**	**0.095T**
+0.0008	-0.0008	0.0008L	+0.0013	+0.0002	0.0002T				+0.0020	+0.0009	0.0009T
		0.0026T			0.0031T						0.0037T

(1)Tolerance range is from +0 to value listed.
NOTE: Tolerance and shaft diameters are shown in the table as variances from nominal bearing bore.

These charts are guidelines for specifying shaft and housing fits related to particular operating conditions in table 6 on page 29.

TABLE 8. SPHERICAL ROLLER BEARINGS - SHAFT TOLERANCES (CLASSES m6, n6, p6, r6, r7)

Bearing Bore			m6			n6			p6			r6			r7		
Nominal (Max.)		Tolerance[1]	Shaft Dia.		Fit	Shaft Dia.		Fit	Shaft Dia.		Fit	Shaft Dia.		Fit	Shaft Dia.		Fit
Over	Incl.		Max.	Min.		Max.	Min.		Max.	Min.		Max.	Min.		Max.	Min.	
mm in.	mm in.	mm in.	mm in.	mm in.	mm in.	mm in.	mm in.	mm in.	mm in.	mm in.	mm in.	mm in.	mm in.	mm in.	mm in.	mm in.	mm in.
30.000 1.1811	**50.000** 1.9685	**-0.014** -0.0006	**+0.025** +0.0010	**+0.009** +0.0004	**0.009T** **0.037T** 0.0004T 0.0145T	–	–	–	–	–	–	–	–	–	–	–	–
50.000 1.9685	**80.000** 3.1496	**-0.015** -0.0006	**+0.030** +0.0012	**+0.011** +0.0004	**0.011T** **0.045T** 0.0004T 0.0018T	**+0.039** +0.0015	**+0.020** +0.0008	**0.020T** **0.054T** 0.0008T 0.0021T	–	–	–	–	–	–	–	–	–
80.000 3.1496	**120.000** 4.7244	**-0.020** -0.0008	**+0.035** +0.0014	**+0.013** +0.0005	**0.013T** **0.055T** 0.0005T 0.0022T	**+0.045** +0.0018	**+0.023** +0.0009	**0.023T** **0.065T** 0.0009T 0.0026T	**+0.059** +0.0023	**+0.037** +0.0015	**0.037T** **0.079T** 0.0015T 0.0031T	–	–	–	–	–	–
120.000 4.7244	**180.000** 7.0866	**-0.025** -0.0010	**+0.040** +0.0016	**+0.015** +0.0006	**0.015T** **0.065T** 0.0006T 0.0026T	**+0.052** +0.0020	**+0.027** +0.0011	**0.027T** **0.077T** 0.0011T 0.0030T	**+0.068** +0.0027	**+0.043** +0.0017	**0.043T** **0.093T** 0.0017T 0.0037T	**+0.090** +0.0035	**+0.065** +0.0026	**0.065T** **0.115T** 0.0026T 0.0045T	–	–	–
180.000 7.0866	**200.000** 7.8740	**-0.030** -0.0012	**+0.046** +0.0018	**+0.017** +0.0007	**0.017T** **0.076T** 0.0007T 0.0030T	**+0.060** +0.0024	**+0.031** +0.0012	**0.031L** **0.090T** 0.0012L 0.0036T	**+0.079** +0.0031	**+0.050** +0.0020	**0.050T** **0.109T** 0.0020T 0.0043T	**+0.106** +0.0042	**+0.077** +0.0030	**0.077T** **0.136T** 0.0030T 0.0054T	–	–	–
200.000 7.8740	**225.000** 8.8583	**-0.030** -0.0012	**+0.046** +0.0018	**+0.017** +0.0007	**0.017T** **0.076T** 0.0007T 0.0030T	**+0.060** +0.0024	**+0.031** +0.0012	**0.031L** **0.090T** 0.0012L 0.0036T	**+0.079** +0.0031	**+0.050** +0.0020	**0.050T** **0.109T** 0.0020T 0.0043T	**+0.109** +0.0043	**+0.080** +0.0031	**0.080T** **0.139T** 0.0031T 0.0055T	**+0.126** +0.0050	**+0.080** +0.0031	**0.080T** **0.156T** 0.0031T 0.0062T
225.000 8.8583	**250.000** 9.8425	**-0.030** -0.0012	**+0.046** +0.0018	**+0.017** +0.0007	**0.017T** **0.076T** 0.0007T 0.0030T	**+0.060** +0.0024	**+0.031** +0.0012	**0.031L** **0.090T** 0.0012L 0.0036T	**+0.079** +0.0031	**+0.050** +0.0020	**0.050T** **0.109T** 0.0020T 0.0043T	**+0.113** +0.0044	**+0.084** +0.0033	**0.084T** **0.143T** 0.0033T 0.0056T	**+0.130** +0.0051	**+0.084** +0.0033	**0.084T** **0.160T** 0.0033T 0.0063T
250.000 9.8425	**280.000** 11.0236	**-0.035** -0.0014	**+0.052** +0.0020	**+0.020** +0.0008	**0.020T** **0.087T** 0.0008T 0.0034T	**+0.066** +0.0026	**+0.034** +0.0013	**0.034T** **0.101T** 0.0013T 0.0040T	**+0.088** +0.0035	**+0.056** +0.0022	**0.056T** **0.123T** 0.0022T 0.0049T	**+0.126** +0.0050	**+0.094** +0.0037	**0.094T** **0.161T** 0.0037T 0.0064T	**+0.146** +0.0057	**+0.094** +0.0037	**0.094T** **0.181T** 0.0037T 0.0071T
280.000 11.0236	**315.000** 12.4016	**-0.035** -0.0014	**+0.052** +0.0020	**+0.020** +0.0008	**0.020T** **0.087T** 0.0008T 0.0034T	**+0.066** +0.0026	**+0.034** +0.0013	**0.034T** **0.101T** 0.0013T 0.0040T	**+0.088** +0.0035	**+0.056** +0.0022	**0.056T** **0.123T** 0.0022T 0.0049T	**+0.130** +0.0051	**+0.098** +0.0039	**0.098T** **0.165T** 0.0039T 0.0065T	**+0.150** +0.0059	**+0.098** +0.0039	**0.098T** **0.185T** 0.0039T 0.0073T
315.000 12.4016	**355.000** 13.9764	**-0.040** -0.0016	**+0.057** +0.0022	**+0.021** +0.0008	**0.021T** **0.097T** 0.0008T 0.0038T	**+0.073** +0.0029	**+0.037** +0.0015	**0.037T** **0.113T** 0.0015T 0.0045T	**+0.098** +0.0039	**+0.062** +0.0024	**0.062T** **0.138T** 0.0024T 0.0055T	**+0.144** +0.0057	**+0.108** +0.0043	**0.108T** **0.184T** 0.0043T 0.0073T	**+0.165** +0.0065	**+0.108** +0.0043	**0.108T** **0.205T** 0.0043T 0.0081T

[1]Tolerance range is from +0 to value listed.

NOTE: Tolerance and shaft diameters are shown in the table as variances from nominal bearing bore.

Continued on next page.

These charts are guidelines for specifying shaft and housing fits related to particular operating conditions in table 6 on page 29.

Continued from previous page.

Bearing Bore			m6			n6			p6			r6			r7		
Nominal (Max.)		Tolerance[1]	Shaft Dia.		Fit	Shaft Dia.		Fit	Shaft Dia.		Fit	Shaft Dia.		Fit	Shaft Dia.		Fit
Over	Incl.		Max.	Min.		Max.	Min.		Max.	Min.		Max.	Min.		Max.	Min.	
mm in.	**mm** in.	**mm** in.	**mm** in.	**mm** in.	**mm** in.	**mm** in.	**mm** in.	**mm** in.	**mm** in.	**mm** in.	**mm** in.	**mm** in.	**mm** in.	**mm** in.	**mm** in.	**mm** in.	**mm** in.
								0.037T			**0.062T**			**0.114T**			**0.114T**
355.000	**400.000**	**-0.040**	–	–	–	**+0.073**	**+0.037**	**0.113T**	**+0.098**	**+0.062**	**0.138T**	**+0.150**	**+0.114**	**0.190T**	**+0.171**	**+0.114**	**0.211T**
13.9764	15.7480	-0.0016				+0.0029	+0.0015	0.0015T	+0.0039	+0.0024	0.0024T	+0.0059	+0.0045	0.0045T	+0.0067	+0.0045	0.0045T
								0.0045T			0.0055T			0.0075T			0.0083T
								0.040T			**0.068T**			**0.126T**			**0.126T**
400.000	**450.000**	**-0.045**	–	–	–	**+0.080**	**+0.040**	**0.125T**	**+0.108**	**+0.068**	**0.153T**	**+0.166**	**+0.126**	**0.211T**	**+0.189**	**+0.126**	**0.234T**
15.7480	17.7165	-0.0018				+0.0031	+0.0016	0.0016T	+0.0043	+0.0027	0.0027T	+0.0065	+0.0050	0.0050T	+0.0074	+0.0050	0.0050T
								0.0049T			0.0061T			0.0083T			0.0092T
								0.040T			**0.068T**			**0.132T**			**0.132T**
450.000	**500.000**	**-0.045**	–	–	–	**+0.080**	**+0.040**	**0.125T**	**+0.108**	**+0.068**	**0.153T**	**+0.172**	**+0.132**	**0.217T**	**+0.195**	**+0.132**	**0.240T**
17.7165	19.6850	-0.0018				+0.0031	+0.0016	0.0016T	+0.0043	+0.0027	0.0027T	+0.0068	+0.0052	0.0052T	+0.0077	+0.0052	0.0052T
								0.0049T			0.0061T			0.0086T			0.0095T

[1]Tolerance range is from +0 to value listed.

NOTE: Tolerance and shaft diameters are shown in the table as variances from nominal bearing bore.

LUBRICATION

To help maintain a bearing's antifriction characteristics, lubrication is needed to:

- Minimize rolling resistance caused by deformation of the rolling elements and raceway under load by separating the mating surfaces.
- Minimize sliding friction occurring between rolling elements, raceways and cage.
- Transfer heat (with oil lubrication).
- Protect from corrosion and, with grease lubrication, from contaminant ingress.

LUBRICATION

The wide range of bearing types and operating conditions precludes any simple, all-inclusive statement or guideline allowing the selection of the proper lubricant. At the design level, the first consideration is whether oil or grease is best for the particular operation. The advantages of oil and grease are outlined in the table below. When heat must be carried away from the bearing, oil must be used. It is typically preferred for very high-speed applications. **Timken® SNT housings and seal systems are specifically designed for grease lubrication. If an application requires oil lubrication, contact your Timken engineer for assistance.**

TABLE 9. ADVANTAGES OF OIL AND GREASE

Oil	Grease
Carries heat away from the bearings	Simplifies seal design and acts as a sealant
Carries away moisture and particulate matter	Permits prelubrication of sealed or shielded bearings
Easily controlled lubrication	Generally requires less frequent lubrication

European REACH compliance

Timken-branded lubricants, greases and similar products sold in stand-alone containers or delivery systems are subject to the European REACH (**R**egistration, **E**valuation, **A**uthorization and Restriction of **CH**emicals) directive. For import into the European Union, Timken can sell and provide only those lubricants and greases that are registered with ECHA (**E**uropean **CH**emical **A**gency). For further information, please contact your Timken engineer.

GREASE LUBRICATION

Grease lubrication is generally applicable to low-to-moderate speed applications that have operating temperatures within the limits of the grease. There is no universal antifriction bearing grease. Each grease has limiting properties and characteristics.

Greases consist of a base oil, a thickening agent and additives. Conventionally, bearing greases have consisted of petroleum base oils thickened to the desired consistency by some form of metallic soap. More recently synthetic base oils have been used with organic and inorganic thickeners. Table 10 summarizes the composition of typical lubricating greases.

TABLE 10. COMPOSITION OF GREASES

Base Oil	+	Thickening Agents	+	Additives	=	Lubricating Grease
Mineral oil Synthetic hydrocarbon Esters Perfluorinated oil Silicone		Soaps and complex soaps lithium, aluminum, barium, calcium Non-Soap (inorganic) microgel (clay), carbon black, silica-gel, PTFE Non-Soap (organic) Urea compounds		Rust inhibitors Dyes Tactifiers Metal deactivates Oxidation inhibitors Anti-wear EP		

Calcium- and aluminum-based greases have excellent water resistance and are used in industrial applications where water ingress is an issue. Lithium-based greases are multi-purpose and are used in industrial applications and wheel bearings.

Synthetic base oils such as esters, organic esters and silicones used with conventional thickeners and additives typically have higher maximum operating temperatures than petroleum-based greases. Synthetic greases can be designed to operate in temperatures from -73° C (-100° F) to 288° C (550° F).

In table 11 are the general characteristics of common thickeners used with petroleum base oils.

Use of the thickeners in table 11 with synthetic hydrocarbon or ester base oils increases the maximum operating temperature by approximately 10° C (18° F).

TABLE 11. GENERAL CHARACTERISTICS OF THICKENERS USED WITH PETROLEUM-BASED OILS

Thickener	Typical Dropping Point		Maximum Temperature		Typical Water Resistance
	°C	°F	**°C**	°F	
Lithium soap	**193**	380	**121**	250	Good
Lithium complex	**260+**	500+	**149**	300	Good
Aluminum complex	**249**	480	**149**	300	Excellent
Calcium sulfonate	**299**	570	**177**	350	Excellent
Polyurea	**260**	500	**149**	300	Good

Using polyurea as a thickener for lubricating fluids is one of the most significant lubrication developments in more than 30 years. Polyurea grease performance is outstanding in a wide range of bearing applications.

BASE OILS

Base oils are classified as either petroleum types (refined from crude oil) or synthetic types (produced by chemical synthesis).

Petroleum oils

Petroleum oils are made from a petroleum hydrocarbon derived from crude oil, with additives to improve certain properties. Greases with petroleum oils can be used in most general industrial bearing applications and many specialty applications with moderate operating temperatures.

Synthetic oils

Synthetic oils cover a broad range or categories and include polyalphaolefins, silicones, polyglycols and various esters. In general, synthetic oils are less prone to oxidation and perform more efficiently than petroleum oils at extreme hot or cold temperatures. Physical properties, such as pressure-viscosity coefficients, tend to vary between oil types. Use caution when making oil selections.

The polyalphaolefins (PAO) have a hydrocarbon chemistry that parallels petroleum oil both in chemical structures and pressure-viscosity coefficients. Therefore, PAO oil is mostly used in the oil-lubricated applications of bearings when severe temperature environments (hot and cold) are encountered or when extended lubricant life is required.

The silicone, ester and polyglycol oils have an oxygen-based chemistry that is structurally quite different from petroleum oils and PAO oils. This difference has a profound effect on its physical properties where pressure-viscosity coefficients can be lower compared to mineral and PAO oils. This means that these types of synthetic oils may actually generate a smaller elastohydrodynamic (EHD) film thickness than a mineral or PAO oil of equal viscosity at operating temperature. Reductions in bearing fatigue life and increases in bearing wear could result from this reduction of lubricant film thickness.

WARNING

Failure to observe the following warnings could create a risk of death or serious injury.

Proper maintenance and handling practices are critical. Always follow installation instructions and maintain proper lubrication.

Viscosity

The selection of oil viscosity for any bearing application requires consideration of several factors: load, speed, bearing setting, type of oil and environmental factors. Since oil viscosity varies inversely with temperature, a viscosity value must always be stated with the temperature at which it was determined. High-viscosity oil is used for low-speed or high-ambient-temperature applications. Low-viscosity oil is used for high-speed or low-ambient-temperature applications.

There are several classifications of oils based on viscosity grades. The most familiar are the Society of Automotive Engineers (SAE) classifications for automotive engine and gear oils. The American Society for Testing and Materials (ASTM) and the International Organization for Standardization (ISO) have adopted standard viscosity grades for industrial fluids. Fig. 8 shows the viscosity comparisons of ISO/ASTM with SAE classification systems at 40° C (104° F).

VISCOSITY CLASSIFICATION COMPARISON

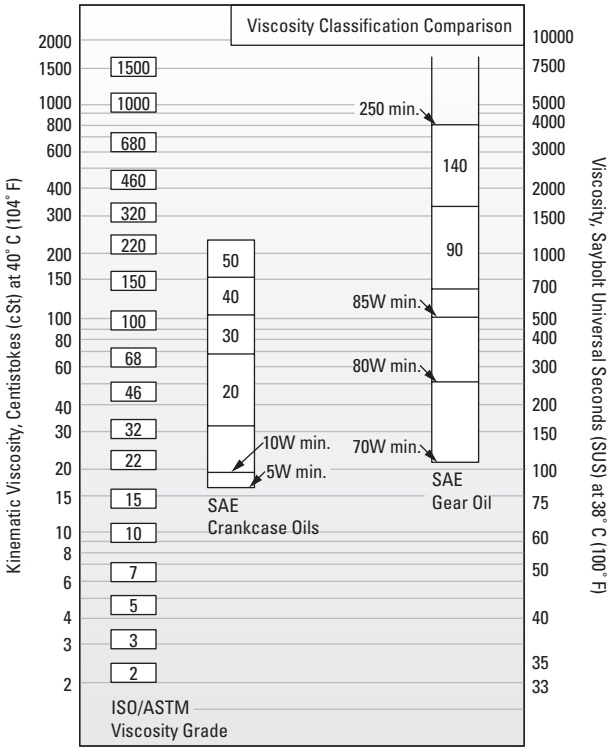

Fig. 8. Comparison between ISO/ASTM grades (ISO 3448/ASTM D2442) and SAE grades (SAE J 300-80 for crankcase oils, SAE J 306-81 for axle and manual transmission oils).

The ASTM/ISO viscosity grade system for industrial oils is depicted in fig. 9 below.

ISO VISCOSITY SYSTEM

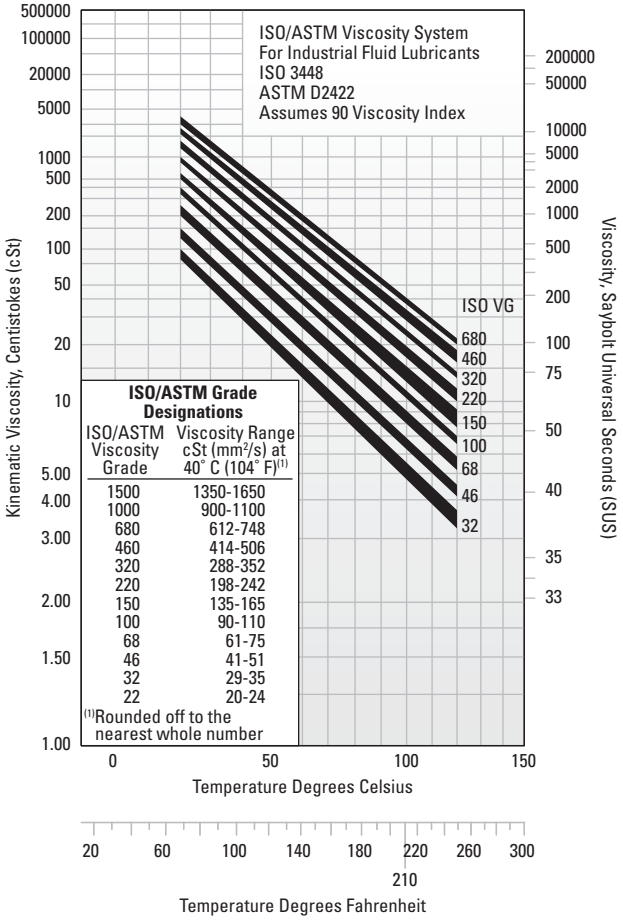

Fig. 9. Viscosity grade system for industrial oils.

CONSISTENCY

Greases may vary in consistency from semi-fluids that are hardly thicker than a viscous oil to solid grades almost as hard as a soft wood.

Consistency is measured by a penetrometer in which a standard weighted cone is dropped into the grease. The distance the cone penetrates (measured in tenths of a millimeter in a specific time) is the penetration number.

The National Lubricating Grease Institute (NLGI) classification of grease consistency is shown in table 12 below.

TABLE 12. NLGI CLASSIFICATIONS

NLGI Grease Grades	Penetration No.
0	355-385
1	310-340
2	265-295
3	220-250
4	175-205
5	130-160
6	85-115

Grease consistency is not fixed, it normally becomes softer when sheared or worked. In the laboratory, this working is accomplished by forcing a perforated plate up and down through a closed container of grease. This working does not compare with the violent shearing action that takes place in a bearing and does not necessarily correlate with actual performance.

LOW TEMPERATURES

Starting torque in a grease-lubricated bearing at low temperatures can be critical. Some greases may function adequately as long as the bearing is operating, but resistance to initial movement may be excessive. In certain smaller machines, starting may be impossible when very cold. Under such operating circumstances, greases containing low-temperature characteristic oils are generally required.

If the operating temperature range is wide, synthetic greases offer advantages. Synthetic greases are available to provide very low starting and running torque at temperatures as low as -73° C (-100° F). In certain instances, these greases perform better in this respect than oil.

An important point concerning lubricating greases is that the starting torque is not necessarily a function of the consistency or the channel properties of the grease. Starting torque is more a function of the individual rheological properties of a particular grease and is best evaluated by application experience.

HIGH TEMPERATURES

The high temperature limit for lubricating greases is generally a function of the thermal and oxidation stability of the fluid and the effectiveness of the oxidation inhibitors. Grease temperature ranges are defined by both the dropping point of the grease thickener and composition of the base oil. Table 13 shows the temperature ranges of various base oils used in grease formulations.

A rule of thumb, developed from years of testing grease-lubricated bearings, indicates that grease life is halved for every 10° C (18° F) increase in temperature. For example, if a particular grease provides 2000 hours of life at 90° C (194° F), by raising the temperature to 100° C (212° F), reduction in life to approximately 1000 hours would result. On the other hand, 4000 hours could be expected by lowering the temperature to 80° C (176° F).

Thermal stability, oxidation resistance and temperature limitations must be considered when selecting greases for high-temperature applications. In non-relubricatable applications, highly refined mineral oils or chemically stable synthetic fluids are required as the oil component of greases for operation at temperatures above 121° C (250° F).

TABLE 13. TEMPERATURE RANGES FOR BASE OILS USED IN LUBRICATING GREASES

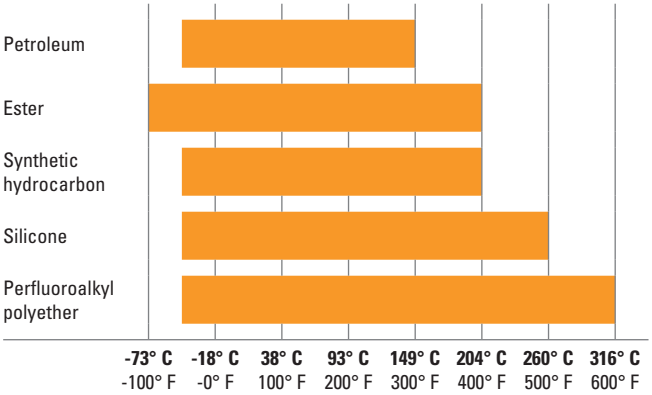

CONTAMINATION

Abrasive Particles

When roller bearings operate in a clean environment, the primary cause of damage is the eventual fatigue of the surfaces where rolling contact occurs. However, when particle contamination enters the bearing system, it is likely to cause damage such as bruising, which can shorten bearing life.

When dirt from the environment or metallic wear debris from some component in the application are allowed to contaminate the lubricant, wear can become the predominant cause of bearing damage. If bearing wear becomes significant, changes will occur to critical bearing dimensions that could adversely affect machine operation.

Bearings operating in a contaminated lubricant exhibit a higher initial rate of wear than those running in an uncontaminated lubricant. With no further contaminant ingress, this wear rate quickly diminishes. The contamination particles are reduced in size as they pass through the bearing contact area during normal operation.

Water

Water and moisture can be particularly conducive to bearing damage. Lubricating greases may provide a measure of protection from this contamination. Certain greases, such as calcium and aluminum-complex, are highly water-resistant.

Sodium-soap greases are water-soluble and should not be used in applications involving water.

Either dissolved or suspended water in lubricating oils can exert a detrimental influence on bearing fatigue life. Water can cause bearing etching that also can reduce bearing fatigue life. The exact mechanism by which water lowers fatigue life is not fully understood. It has been suggested that water enters micro-cracks in the bearing rings that are caused by repeated stress cycles. This leads to corrosion and hydrogen embrittlement in the micro-cracks, reducing the time required for these cracks to propagate to an unacceptable-sized spall.

Water-based fluids, such as water glycol and invert emulsions, also have shown a reduction in bearing fatigue life. Although water from these sources is not the same as contamination, the results support the previous discussion concerning water-contaminated lubricants.

GREASE SELECTION

The successful use of bearing grease depends on the physical and chemical properties of the lubricant as well as application and environmental conditions. Because the choice of grease for a particular bearing under certain service conditions is often difficult to make, you should consult with your lubricant supplier or equipment maker for specific questions about lubrication requirements for your application. You also can contact your Timken engineer for general lubrication guidelines for any application.

Grease must be carefully selected with regard to its consistency at operating temperature. It should not exhibit thickening, separation of oil, acid formation or hardening to any marked degree. It should be smooth, non-fibrous and entirely free from chemically active ingredients. Its dropping point should be considerably higher than the operating temperature.

PERFORMANCE ENHANCING GREASE ADDITIVES

Greases can be enhanced with a variety of base oil and soap additive packages that improve the performance of the grease and extend the life of the bearing the grease is lubricating. These additive packages can include agents which:

- inhibit oxidation, rust and corrosion
- resist water immersion and washout
- provide anti-wear protection
- allow extreme pressure from extraordinary loading

Timken® application-specific lubricants were developed by leveraging our knowledge of tribology and antifriction bearings, and how these two elements affect overall system performance. Timken lubricants help bearings and related components operate effectively in demanding industrial operations. High-temperature, anti-wear and water-resistant additives offer superior protection in challenging environments. Table 14 provides an overview of the Timken greases available for general applications. Contact your Timken engineer for a more detailed publication on Timken lubrication solutions.

TABLE 14. GREASE LUBRICATION SELECTION GUIDE

ENVIRONMENT		APPLICATION
High Wear • Moderate Loads Moderate Speeds Moderate Temperatures	Timken Premium All-Purpose Industrial Grease Part No. GR217	Agriculture • Bushings/Ball Joints Truck and Auto Wheel Bearings Heavy-Duty Industrial
Extreme Heat • Heavy Loads High Sliding Wear Dirty Environments Slow Speeds • Shock Loading	Timken Construction and Off-Highway Grease Part No. GR219	Agriculture/Mining • Cement Plants Construction/Off Road • Rock Quarry Earth-Moving Equipment Fleet Equipment • Heavy Industry Pivot Pins/Splined Shafts
Wet and Corrosive Conditions Quiet Environments • Light Loads Moderate to High Speeds Moderate Temperatures Light Load Moderate Water	Timken Ball Bearing Pillow Block Grease Part No. GR220	Lightly Loaded Pillow Blocks Idler Pulleys • Oven Conveyors Electric Motors • Fans • Pumps Alternators • Generators
Corrosive Media • Extreme Heat Heavy Loads • Wet Conditions Slow to Moderate Speeds	Timken Mill Grease Part Nos. GR180 - NLGI No. 1 GR182 - NLGI No. 2	Aluminum Mills • Paper Mills Steel Mills • Offshore Rigs Power Generation
Incidental Food Contact Hot and Cold Temperatures Moderate to High Speeds Medium Loads	Timken Food Safe Grease Part No. GR231	Food and Beverage Industries Pharmaceuticals
Extreme Low and High Temperatures Severe Loads Corrosive Media Slow to Moderate Speeds	Timken Synthetic Industrial Grease Part No. GR232	Wind Energy Main Bearing Pulp and Paper Machines General Heavy Industry Marine Applications Centralized Grease Systems
Moderate Speeds Light to Moderate Loads Moderate Temperatures Moderate Water	Timken Multi-Use Lithium Grease Part Nos. GR236 - NLGI No. 1, EP1 GR237 - NLGI No. 2, EP2	General Industrial Applications Pins and Bushings • Track Rollers Water Pumps Plain and Antifriction Bearings

This selection guide is not intended to replace the specifications by the equipment builder, who is responsible for its performance.

Many bearing applications require lubricants with special properties or lubricants formulated specifically for certain environments, such as:

- Friction oxidation (fretting corrosion).
- Chemical and solvent resistance.
- Food handling.

For assistance with these or other areas requiring special lubricants, consult your Timken engineer.

GREASE USE GUIDELINES

It is important to use the proper amount of grease in the application. In typical industrial applications, the bearing cavity should be kept approximately one-third to one-half full. Less grease may result in the bearing being starved for lubrication. More grease may result in churning. Both conditions may result in excessive heat generation. As the grease temperature rises, viscosity decreases and the grease becomes thinner. This can reduce the lubricating effect and increase leakage of the grease from the bearing. It also may cause the grease components to separate, leading to a general breakdown of the lubricant properties. As the grease breaks down, bearing torque increases. In the case of excess grease resulting in churning, torque may also increase due to the resistance caused by the grease.

For best results, there should be ample space in the housing to allow room for excess grease to be displaced. However, it is equally important that the grease be retained all around the bearing. If a large void exists between the bearings, grease closures should be used to prevent the grease from leaving the bearing area.

Frictional torque is influenced by the quantity and the quality of lubricant present. Excessive quantities of grease causes churning. The adverse effects of churn are accelerated with increases in operating speed. The churn results in excessive temperatures, separation of the grease components, and breakdown in lubrication values. In normal-speed applications, the housings should be kept approximately one-third to one-half full.

Only in low-speed applications may the housing be entirely filled with grease. This method of lubrication is a safeguard against the entry of foreign matter, where sealing provisions are inadequate for exclusion of contaminants or moisture.

During periods of non-operation, completely filling the housings with grease can provide additional protection to the bearing surfaces. Prior to restarting operation, remove the excess grease and restore the proper level.

Applications using grease lubrication should have a grease fitting and a vent at opposite ends of the housing near the top. A drain plug should be located near the bottom of the housing to allow the grease to purge as needed.

Bearings should be relubricated at regular intervals to help prevent damage. Relubrication intervals are difficult to determine. If plant practice or experience with other applications is not available, consult your lubricant supplier.

Fig. 10. Grease can easily be packed by hand.

Fig. 11. Mechanical grease packer.

Timken offers a range of lubricants to help bearings and related components operate effectively in demanding industrial operations. High-temperature, anti-wear and water-resistant additives offer greater protection in challenging environments. Timken also offers a line of single- and multi-point lubricators to simplify grease delivery.

Grease application methods

Grease, in general, is easier to use than oil in industrial bearing applications. Most bearings that are initially packed with grease require periodic relubrication to operate efficiently.

Grease should be packed into the bearing so that it gets between the rolling elements and coats raceway surfaces.

Grease can be easily packed into small- and medium-size bearings by hand (fig. 10). In shops where bearings are frequently regreased, a mechanical grease packer that forces grease through the bearing under pressure may be appropriate (fig. 11). Regardless of the method, after packing the internal areas of the bearing, a small amount of grease also should be smeared on the outside of the rollers.

The two primary considerations that can effect the relubrication cycle are operating temperature and sealing efficiency. High-operating-temperature applications generally require more frequent regreasing. The less efficient the seals, the greater the grease loss and the more frequently grease must be added.

Grease should be added any time the amount in the bearing falls below the desired amount. The grease should be replaced when its lubrication properties have been reduced through contamination, high temperature, water, oxidation or any other factors. It is also important to follow suggested practice for seal lubrication. Mounting instructions shown starting on page 55 indicated appropriate methods based on seal and housing construction.

GENERAL-PURPOSE INDUSTRIAL GREASE

Polyurea and lithium-based greases are typical of greases that can be used to lubricate many Timken bearing applications in all types of standard equipment. Polyurea and lithium-based greases are normally preferred for general-purpose bearing lubrication and are advantageous in high moisture applications. Both greases have good water-resistant characteristics.

Special consideration should be given to applications where speed, load, temperature or environmental conditions are extreme. For temperature ranges of standard greases see table 13.

Lithium greases, lithium complex greases, or calcium sulfonate thickened grease are suitable for most centralized, single-point, or manually lubricated product. These greases should be smooth, homogeneous and uniform, premium-quality product composed of mineral or synthetic oil, a thickener and appropriate inhibitors (see table 15).

TABLE 15. SUGGESTED LITHIUM SOAP, LITHIUM COMPLEX AND CALCIUM SULFONATE GREASE PROPERTIES

Thickener type	Lithium Complex, or equivalent
Consistency	NLGI No.1 or No. 2
Additives	Anti-wear, corrosion and oxidation inhibitors
Base oil	Mineral oil or synthetic
Viscosity at 40° C	ISO VG 150-220
Viscosity index	80 min.
Pour point	-18° C (0° F) max.

They should not contain materials that are corrosive or abrasive to bearings or seals. The grease should have excellent mechanical and chemical stability. The grease should contain inhibitors to provide long-term protection against oxidation in high-performance applications and protect the bearings from corrosion in the presence of moisture. The suggested base oil viscosity covers a fairly wide range. Lower viscosity products should be used in high-speed and/or lightly loaded applications to minimize heat generation and torque. Higher viscosity products should be used in moderate- to low-speed applications and under heavy loads to maximize lubricant film thickness.

Speed ratings are listed for each size/class part number in the Timken Spherical Roller Bearing Catalog (order no. 10446) on pages 59–88. When application speeds exceed 70 percent of grease speed rating, consider increasing RIC by one ISO clearance range (CNormal to C3). Table 16 is provided as a reference for typical grease thickener compatibilities. For general industrial applications, consider a grease that is NLGI No. 1 or No. 2, with a ISO 150 to 220 viscosity grade.

NOTE

Mixing greases can result in improper bearing lubrication. Always follow the specific lubrication instructions of your equipment supplier.

Consult your lubricant supplier for further information for your specific requirement.

TABLE 16. GREASE COMPATIBILITY CHART

■ = Best Choice
■ = Compatible
■ = Borderline
■ = Incompatible

	Al Complex	Ba Complex	Ca Stearate	Ca 12 Hydroxy	Ca Complex	Ca Sulfonate	Non-Soap Clay	Li Stearate	Li 12 Hydroxy	Li Complex	Polyurea	Polyurea S S
Aluminum Complex	Best Choice	Incompatible	Incompatible	Compatible	Incompatible	Borderline	Incompatible	Incompatible	Incompatible	Compatible	Incompatible	Compatible
Timken Food Safe	Best Choice	Incompatible	Incompatible	Compatible	Incompatible	Borderline	Incompatible	Incompatible	Incompatible	Compatible	Incompatible	Compatible
Barium Complex	Incompatible	Best Choice	Incompatible	Compatible	Incompatible	Compatible	Incompatible	Incompatible	Incompatible	Incompatible	Incompatible	Borderline
Calcium Stearate	Incompatible	Incompatible	Best Choice	Compatible	Incompatible	Compatible	Compatible	Compatible	Borderline	Compatible	Incompatible	Compatible
Calcium 12 Hydroxy	Compatible	Compatible	Compatible	Best Choice	Borderline	Borderline	Compatible	Compatible	Compatible	Compatible	Incompatible	Compatible
Calcium Complex	Incompatible	Incompatible	Incompatible	Borderline	Best Choice	Incompatible	Incompatible	Incompatible	Incompatible	Compatible	Compatible	Compatible
Calcium Sulfonate	Borderline	Compatible	Compatible	Borderline	Incompatible	Best Choice	Incompatible	Borderline	Borderline	Compatible	Incompatible	Compatible
Timken Premium Mill Timken Heavy-Duty Moly	Borderline	Compatible	Compatible	Borderline	Incompatible	Best Choice	Incompatible	Borderline	Borderline	Compatible	Incompatible	Compatible
Clay Non-Soap	Incompatible	Incompatible	Compatible	Compatible	Incompatible	Incompatible	Best Choice	Incompatible	Incompatible	Incompatible	Incompatible	Borderline
Lithium Stearate	Incompatible	Incompatible	Compatible	Compatible	Incompatible	Borderline	Incompatible	Best Choice	Compatible	Compatible	Incompatible	Compatible
Lithium 12 Hydroxy	Incompatible	Incompatible	Borderline	Compatible	Incompatible	Borderline	Incompatible	Compatible	Best Choice	Compatible	Incompatible	Compatible
Lithium Complex	Compatible	Incompatible	Compatible	Compatible	Compatible	Compatible	Incompatible	Compatible	Compatible	Best Choice	Incompatible	Compatible
Polyurea Conventional	Incompatible	Incompatible	Incompatible	Incompatible	Compatible	Incompatible	Incompatible	Incompatible	Incompatible	Incompatible	Best Choice	Compatible
Polyurea Shear Stable	Compatible	Borderline	Compatible	Compatible	Compatible	Compatible	Borderline	Compatible	Compatible	Compatible	Compatible	Best Choice
Timken Multi-Use	Incompatible	Incompatible	Borderline	Compatible	Incompatible	Borderline	Incompatible	Compatible	Best Choice	Compatible	Incompatible	Compatible
Timken All -Purpose Timken Synthetic	Compatible	Incompatible	Compatible	Compatible	Compatible	Compatible	Incompatible	Compatible	Compatible	Best Choice	Incompatible	Compatible
Timken Pillow Block	Compatible	Borderline	Compatible	Compatible	Compatible	Compatible	Borderline	Compatible	Compatible	Compatible	Compatible	Best Choice

APPLICATION CONSIDERATIONS

For higher speed applications (operating at 70 percent of the grease speed rating or more), a lighter base oil viscosity (ISO 100 – 150) can be considered. Conversely, for lower speed applications, a grease with a heavier base oil viscosity (ISO 320 – 460) can be considered. For lower speed applications operating at colder start-up temperatures (<-18° C [0° F]), consider a softer grease (NLGI grade 1) with an approved EP additive. The lighter grade will allow more grease flow into the bearing contact area and the EP additive will reduce wear during start-up. An ISO 460 base oil viscosity also can be considered.

When lower speed applications operate at higher temperatures (>149° C [300° F]), consult your Timken engineer.

SNT SPHERICAL ROLLER BEARING PLUMMER BLOCKS PRODUCT DATA TABLES

Spherical roller bearing plummer blocks combine rugged cast iron, ductile iron or steel housings with high-capacity bearings to meet the toughest demands of industry. Each plummer block contains an advanced-design spherical roller bearing with improved geometry and raceway finish for maximized load capacity and service life. Integrated housing and bearing features enhance unit lubrication characteristics. Multiple sealing options protect against contamination.

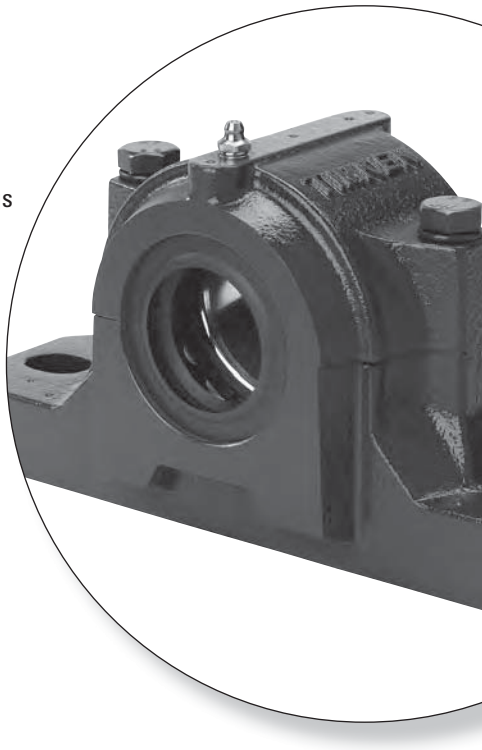

NOMENCLATURE

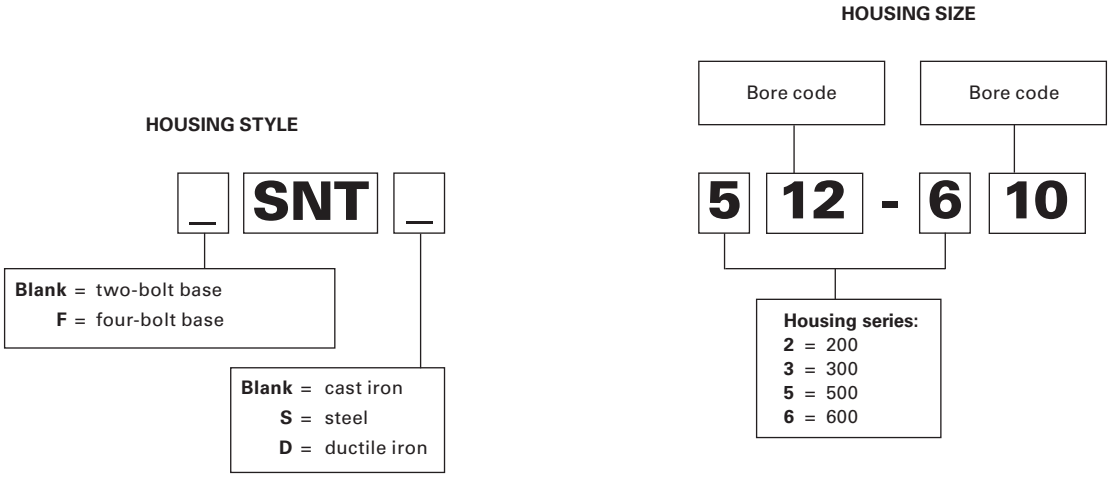

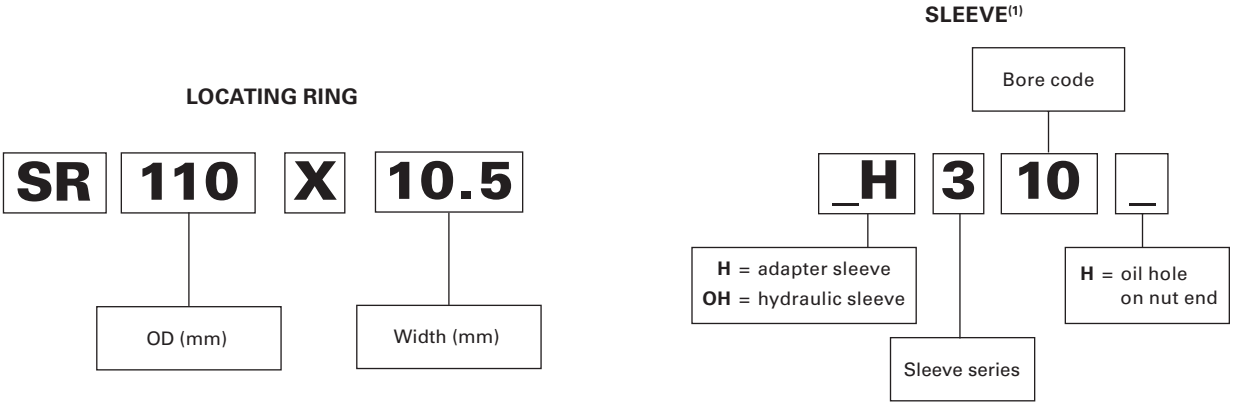

(1)Sleeve assemblies contain adapter sleeve, locknut, and lockwasher

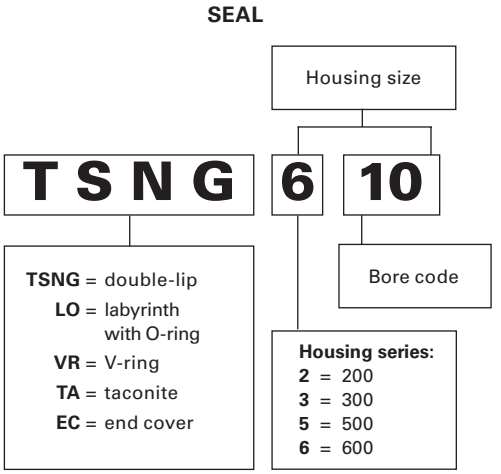

TABLE 17. TAPERED BORE BEARING EXAMPLE FOR SNT 512-610

Bearing	21310K	22310K	22212K
Locating rings	SR110X10.5	SR110X4	SR110X10
Sleeve	H310	H2310	H312
SEAL OPTIONS			
Double-lip	TSNG610	TSNG610	TSNG512
LOR	LO610	LO610	LO512
V-ring	VR610	VR610	VR512
Taconite	TA610	TA610	TA512
End cover	EC512-610	EC512-610	EC512-610

Fig. 12. SNT plummer block nomenclature.

INTRODUCTION

Timken's capabilities in engineering and manufacturing heavy-duty plummer blocks help ensure high performance from our products. In addition, Timken's worldwide sales organization is staffed with experienced engineers who are available for consultation on any plummer block or bearing application. If your design calls for shaft sizes or loads not listed in this catalog, contact your Timken engineer for information about availability of special units.

- **Sizes:** 20 – 400 mm shafts.
- **Applications:** Conveyors, ball mills, casters, rolling mills, heavy movable structures.
- **Features:** Split construction for convenient assembly and disassembly. These units include pry-tool slots and multiple alignment features to ease installation. There are center marks to simplify alignment and dimples for positioning pins and four-bolt mounting. Seal grooves allow for various sealing options.
- **Benefits:** Caps can be removed easily and quickly without damage to the bearing or housing. The design allows for simplified bearing inspection, service and replacement.

DESIGN AND CONSTRUCTION

Timken offers split plummer block housings that can be built with either tapered bore bearings with adapters for mounting on straight shafts or cylindrical bore bearings for assembly on shouldered shafts. Each offering includes all the accessories to meet a variety of needs.

Timken uses a system of doweling caps and bases together at an early stage of manufacturing, so that they remain a single unit during machining. They are not interchangeable as separate parts and become precisely mated components, helping to ensure a precise fit. Timken supplies plummer block housings for mounting with two or four bolts.

Standard caps and bases are made from high-grade, stress-relieved cast iron. They also are available in cast steel and ductile iron.

The illustration below (fig. 13) shows all parts of a plummer block assembly that are described throughout this section.

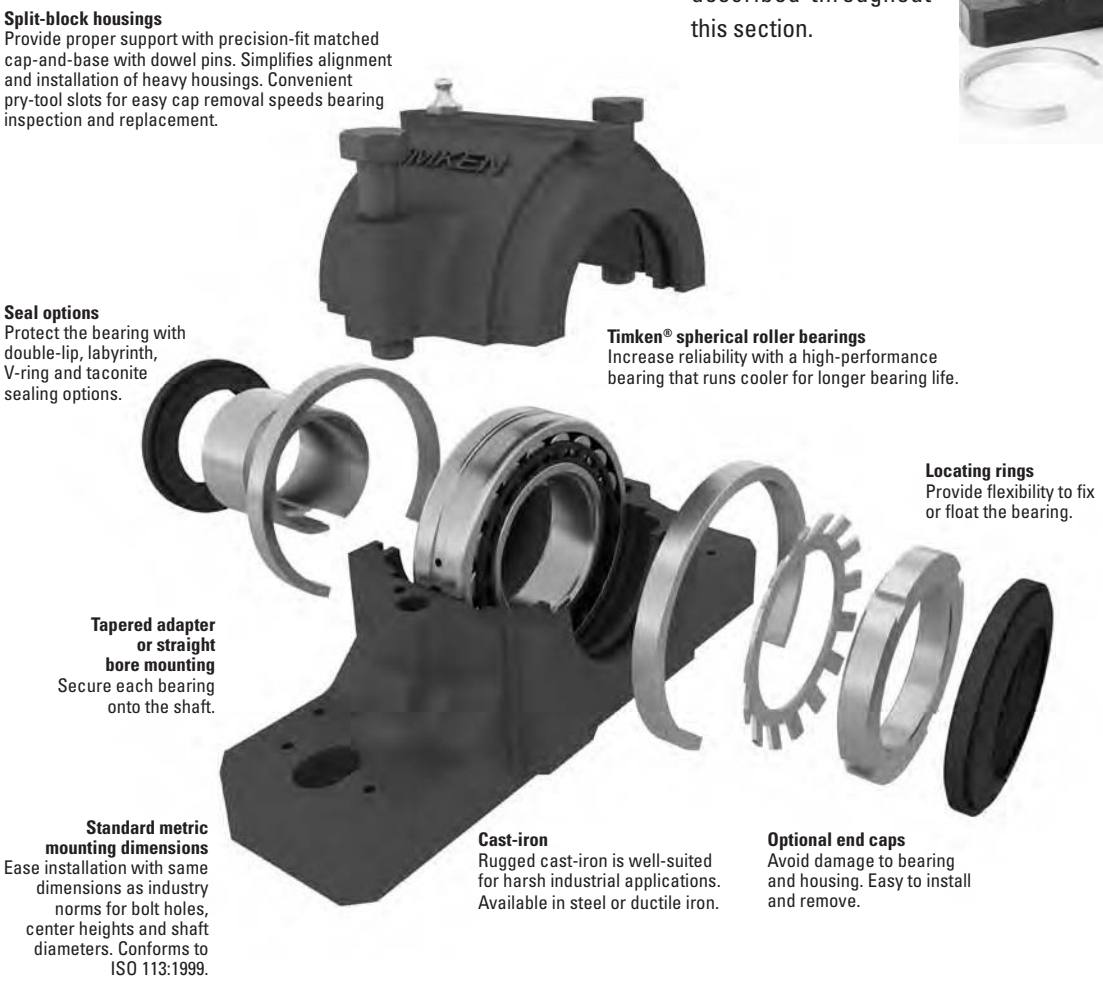

Fig. 13. SNT plummer block components and features.

MOUNTING

ADAPTER VERSUS STRAIGHT BORE

Typically, a spherical roller bearing plummer block assembly is mounted on a straight shaft using a tapered bore bearing and adapter assembly. Standard commercial shafting can be used without additional machining. (Suggested shaft diameters are shown in table 20 on page 82.) Adapter mount also permits maximum flexibility in the axial positioning of the bearing on the shaft and will accommodate light locational thrust loads. Timken plummer blocks for tapered bore and cylindrical bore are available.

Adapter-mounted spherical roller bearings require the correct removal of diametral clearance from the bearing to prevent relative rotation between inner race and sleeve or shaft. For proper shaft mounting of adapter-type spherical roller bearings, see page 21.

When application conditions produce heavy thrust loads, or a need exists for exact axial location or a positive shaft interference fit, a direct straight bore mounting may be the best option. This requires a shouldered shaft, machined for proper fit, and a straight bore bearing. Timken plummer block housings for straight bore applications are available for use with series 213, 222, 223 and 232.

Suggested fits for shafts in cylindrical bore spherical roller bearings are shown in the engineering section of this catalog in table 4 on page 23. For applications involving heavy shock, vibration, unbalanced rotating loads or other non-standard conditions, consult your Timken engineer.

FIXED AND FLOAT PLUMMER BLOCKS

SNT split plummer block components include two to six locating rings allowing for installation at either fixed or float positions on the shaft. For the fixed position, two or more locating rings are used on one or both sides of the bearing.

CLOSED-END INSTALLATIONS

In some applications, the shaft end is designed to terminate inside the plummer block. For this design, positive fitting end-cap inserts are available to help seal out contaminants and retain lubricant. Timken heavy-duty end covers provide sealing for closed-end applications.

Designers and installers need to make sure the shaft end does not contact the closure. A minimum of 3 mm clearance at maximum thermal expansion is suggested between the end of the shaft and the closure. Dimension Y, in the spherical roller bearing tables (pages 85–91), defines the maximum permissible length of the shaft from the centerline of the plummer block housing.

NOTE

Failure to employ proper mounting procedures can cause reduced bearing performance.

SNT LUBRICATION

Timken plummer block housings are designed for grease lubrication. They also can be modified to accommodate oil-bath and circulating oil- or oil/air-mist systems. Contact your Timken engineer for assistance. Please reference the installation guides on pages 55 – 59 for grease fill information.

Lubrication groove and holes may be provided in the bearing outer ring. This feature, designated by adding suffix W33 to the bearing number, should be specified whenever re-ordering bearings for pillow blocks. For bearings with lubrication groove and holes, it is suggested that the fresh lubricant is fed directly to the center of the bearing between the rows of rollers and distributed to the rest of the bearing. This helps ensure the used lubricant is purged from the bearing. Housed units feature multiple dimples that can be used to drill and tap for alternative grease fitting locations as needed.

SEALS

Timken® SNT plummer blocks are available with multiple sealing options. Each seal type incorporates specific features to meet your application needs. Table 18 compares the various features of each seal type.

DOUBLE-LIP SEALS

Double-lip seals are the most common seal design used with SNT plummer blocks. These are general all purpose elastomer seals that can protect in moderately contaminated environments. The seal is split into two 180 degree halves for easy installation. The seal element runs against the shaft surface and should be used in grease lubricated blocks. *Contact your Timken engineer for double-lip seal availability when using cylindrical bore housings.*

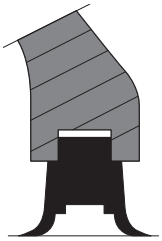

Fig. 14. Double-lip seals.

V-RING SEALS

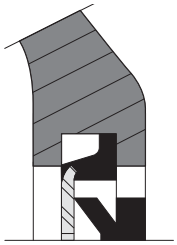

Fig. 15. V-ring seals.

V-ring seals are a deflector type seal. They are made up of an elastomer V-ring seal element that rotates with the shaft and runs against the axial surface of a washer-type component that is retained in the block housing. As the V-ring element is a stretch fit onto the shaft, a rougher shaft surface is acceptable. This seal performs well in moderately contaminated environments with fine particulate.

LABYRINTH SEALS

Labyrinth seals are made up of a single metal ring component that interconnects with the grooves in the housing to form a labyrinth gap. The inside diameter of the metal ring contains an O-ring that creates an interference fit with the shaft so that the ring will rotate with the shaft. Labyrinth seals can be used on high-speed applications and in moderately contaminated environments.

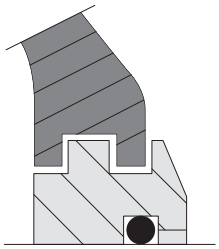

Fig. 16. Labyrinth seals.

TACONITE SEALS

Taconite seals are a combination of both a labyrinth seal and V-ring seal. The labyrinth seal is made up of two separate metal ring components, inner and outer, that have interconnecting grooves that form a labyrinth gap. The outer metal ring component contains an O-ring on its outside diameter that provides an interference fit to the groove in the housing. The inside diameter of the inner metal ring component contains an O-ring that creates an interference fit with the shaft so that the ring will rotate with the shaft. This seal performs well in highly contaminated environments such as those seen in mining operations.

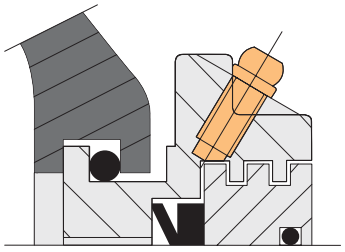

Fig. 17. Taconite seals.

TABLE 18. SEAL SELECTION

Seal Selection	Double-Lip (TSNG)	V-Ring (VR)	Labyrinth (LO)	Taconite (TA)
Material	NBR	NBR rubber + mild steel plate	Steel + NBR O-ring	Steel + NBR O-ring and V-ring
Temperature	-40° to 100° C (-40° to 212° F)	-40° to 100° C (-40° to 212° F)	-40° to 120° C (-40° to 248° F)	-40° to 100° C (-40° to 212° F)
Maximum speed	8 m/s	7 m/s	Same as bearing	7 m/s
Grease relubrication	Excellent	Excellent	Good	Good
Oil lubrication[1]	Poor	Poor	Poor	Poor
Low friction	Good	Good	Excellent	Good
Resists dust/fine particles	Excellent	Excellent	Good	Excellent
Resists coarse particles	Good	Poor	Excellent	Good
Resists water	Good	Good	Fair	Good
Misalignment Shaft dia. ≤ 100 mm	1°	1.5°	0.3°	0.3°
Misalignment Shaft dia. > 100 mm	0.5°	1°	0.3°	0.3°

[1]If an application requires oil lubrication, please contact your Timken engineer.

LOAD RATINGS AND LIFE

Load ratings for the spherical roller bearings that are used in plummer blocks are found in the dimension tables on pages 85 through 91. Life calculation formulas are found in the Engineering Manual (order no. 10424) on page 48 available on www.timken.com.

In addition to individual bearing selection, the ability of the plummer block to carry the operating load should be considered.

It should be noted that the load rating figures supplied in this catalog are applicable only when the load direction is generally toward the base of the plummer block. If the plummer block must be mounted so the load can be applied in any other direction, consult your Timken engineer.

INSTALLATION GUIDES

Following are installation guides for the SNT housings and the four seal types offered by Timken.

MOUNTING HOUSINGS WITH DOUBLE-LIP SEALS

Prior to starting installation, please read the following instructions. Contact a Timken engineer with any questions.

1. Clean the work area. Check the dimensional and form accuracy of the shaft seat. Note: The shaft roundness specification should be half of the O.D. tolerance. Ensure the shaft is free from burrs, gouges or other imperfections.
2. Ensure the surface roughness of the support surface Ra ≤ 12.5 µm. Ensure flatness is within 0.08 mm (base) and 0.125 mm aggregate (housing base and mounting surface).
3. Determine the position of the housing relative to the adapter sleeve on the shaft for bearings on adapter sleeves. For bearings that have to be relubricated from the side, the grease fitting in the housing cap should always face away from the locknut on the adapter sleeve. When housings are mounted on the end of a shaft, grease must be supplied at the end cover side. Make sure to position the base correctly because the cap only fits in one direction.
4. Position the housing on the support surface. Fit the attachment bolts but do not tighten them (fig. 18a).
5. Insert one seal half in each of the grooves in the housing base. Fill the space between the two sealing lips with grease (fig. 18b). If the housing is used on the end of a shaft, insert an end cover on one side instead of the seal half.
6. Mount the bearing on the shaft – either directly on a stepped shaft or using an adapter sleeve. Completely fill the bearing with grease. The remainder of the suggested grease quantity can be placed in the housing, equally distributed on each side of the bearing (See grease fill).
7. Install the shaft with bearing in the housing base (fig. 19a).
8. Put one locating ring on each side of the bearing for locating bearing arrangements (fig. 19b).
9. Carefully align the housing base. Use the vertical markings at the middle of the side faces and end faces of the housing base to help with this (fig. 20a). Then lightly tighten the attachment bolts (fig. 20b).
10. The remaining seal halves must be inserted in the seal grooves in the housing cap and the space between the sealing lips filled with grease.
11. Check the cap and base to see that they show the same identification. Install the cap onto the base (fig. 21a) and tighten the cap bolts to the torque specified in the table.
12. Fully tighten the attachment bolts in the housing base (fig. 21b). Suggested tightening torques are given in the table.

For torque table and grease fill information, please see page 59.

Fig. 18

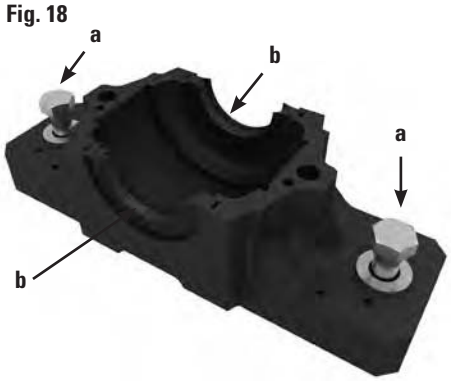

Fig. 19

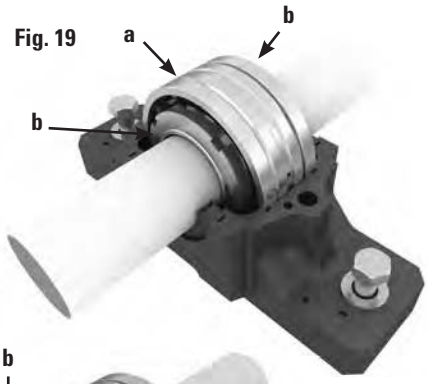

Fig. 20

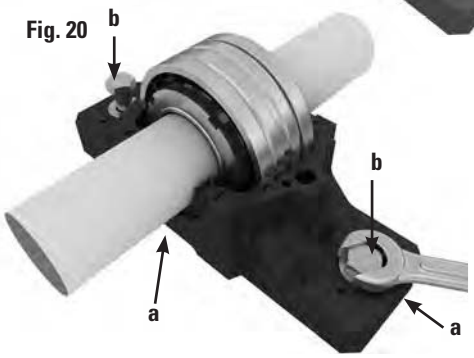

Fig. 21

MOUNTING HOUSINGS WITH LABYRINTH SEALS

Prior to starting installation, please read the following instructions. Contact a Timken engineer with any questions.

1. Clean the work area. Check the dimensional and form accuracy of the shaft seat. Note: The shaft roundness specification should be half of the O.D. tolerance. Ensure the shaft is free from burrs, gouges or other imperfections.
2. Ensure the surface roughness of the support surface Ra ≤ 12.5 µm. Ensure flatness is within 0.08 mm (base) and 0.125 mm aggregate (housing base and mounting surface).
3. For bearings on adapter sleeves, determine the position of the housing relative to the adapter sleeve on the shaft. For bearings that have to be relubricated from the side, the grease fitting in the housing cap should always face away from the locknut on the adapter sleeve. Grease should be supplied at the end cover side where housings are mounted on the end of a shaft. Be sure to position the base correctly since the cap only fits in one direction.
4. Position the housing on the support surface. Fit the attachment bolts but do not tighten them (fig. 22).
5. Mount the labyrinth ring on the shaft (fig. 23a).
6. Mount the bearing on the shaft – either directly on a stepped shaft or using an adapter sleeve (fig. 23b). Completely fill the bearing with grease. The remainder of the suggested grease quantity can be placed in the housing, equally distributed on each side of the bearing (See grease fill).
7. Mount the second labyrinth ring on the shaft in the correct position (fig. 23c). If the housing is to be used on the end of a shaft, omit the second labyrinth ring and insert an end cover in the housing base instead.
8. Install the shaft with bearing and labyrinth ring(s) in the housing base (fig. 24a).
9. Place one locating ring on each side of the bearing for locating bearing arrangements (fig. 24b).
10. Align the housing base. Use the vertical markings at the middle of the side faces and end faces of the housing base to help with this. Tighten the attachment bolts (fig. 24c).
11. Check the cap and base to see that they have the same identification. Install the cap onto the base (fig. 25a) and tighten the cap bolts to the torque specified in the table.
12. Fully tighten the attachment bolts in the housing base (fig. 25b). Suggested tightening torques are given in the table.
13. Insert the hollow O-ring cord of synthetic rubber in the grooves in the labyrinth rings. Use a screwdriver while turning the shaft, take care not to damage the seal (fig. 25c).

For torque table and grease fill information, please see page 59.

Fig. 22

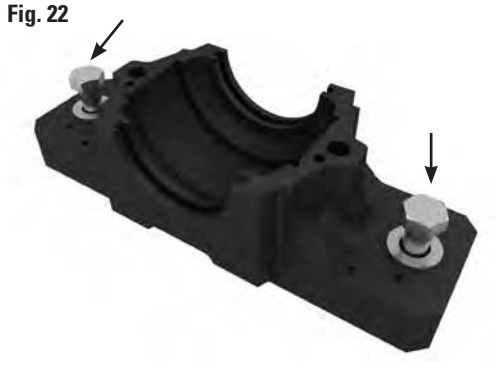

Fig. 23

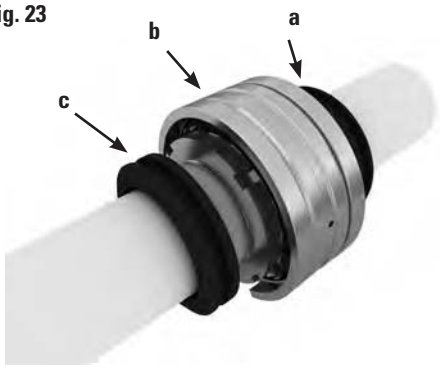

Fig. 24

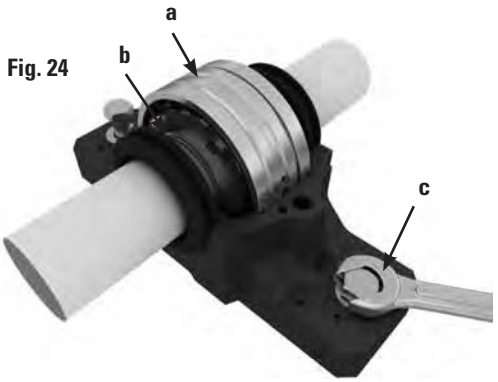

Fig. 25

MOUNTING HOUSINGS WITH V-RING SEALS

Prior to starting installation, please read the following instructions. Contact a Timken engineer with any questions.

1. Ensure the work area is clean. Check the dimensional and form accuracy of the shaft seat. Note: The shaft roundness specification should be half of the O.D. tolerance. Ensure the shaft is free from burrs, gouges or other imperfections.
2. Ensure the surface roughness of the support surface Ra ≤ 12.5 µm. Ensure flatness is within 0.08 mm (base) and 0.125 mm aggregate (housing base and mounting surface).
3. Determine the position of the housing relative to the adapter sleeve on the shaft for bearings on adapter sleeves. For bearings that have to be relubricated from the side, the grease fitting in the housing cap should always face away from the locknut on the adapter sleeve. Grease should be supplied at the end cover side where housings are mounted on the end of a shaft. Make sure to position the base correctly since the cap only fits in one direction.
4. Position the housing on the support surface. Fit the attachment bolts but do not tighten them (fig. 26).
5. Arrange the one V-ring with sealing washer on the shaft. The V-ring should be furthest away from the bearing and seal against the washer, i.e. the lip should point inward the washer (fig. 27a).
6. Mount the bearing on the shaft – either directly on a stepped shaft or using an adapter sleeve (fig. 27b). Completely fill the bearing with grease. The remainder of the suggested grease quantity can be placed in the housing, equally distributed on each side of the bearing (See grease fill).
7. Arrange the second sealing washer and V-ring on the shaft at the other side of the bearing (fig. 27c). If the housing is to be used on the end of a shaft, mount an end cover instead.
8. Install the shaft with bearing and sealing washers in the housing base (fig. 28a).
9. Put one locating ring on each side of the bearing for locating bearing arrangements.
10. Align the housing base. Use the vertical markings at the middle of the side faces and end faces of the housing base to help with this. Lightly tighten the attachment bolts (fig. 28b).
11. Check the cap and base to see that they bear the same identification. Install the cap onto the base and tighten the cap bolts to the torque marked in the table (fig. 29a).
12. Tighten the attachment bolts in the housing base (fig. 29b). Check the table for suggested tightening torques.
13. Coat the V-ring counterfaces on the sealing washers with grease (fig. 29c).
14. Finally, push the V-ring seals into their correct position. This can be done using a punch or screwdriver to push the seal as the shaft is turned, take care not to damage the seal (fig. 30).

For torque table and grease fill information, please see page 59.

Fig. 26

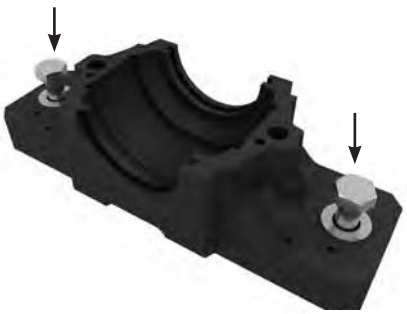

Fig. 27

Fig. 28

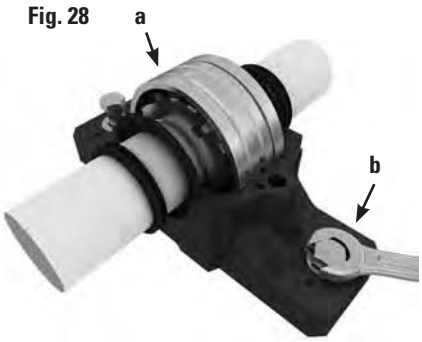

Fig. 29

Fig. 30

MOUNTING HOUSINGS WITH TACONITE SEALS

Prior to starting installation, please read the following instructions. Contact a Timken engineer with any questions.

1. Ensure the work area is clean. Check the dimensional and form accuracy of the shaft seat. Note: The shaft roundness specification should be half of the O.D. tolerance. Ensure the shaft is free from burrs, gouges or other imperfections.
2. Ensure the surface roughness of the support surface Ra ≤ 12.5 µm (500 µin). Ensure flatness is within 0.08 mm (base) and 0.125 mm aggregate (housing base and mounting surface).
3. For bearings on adapter sleeves, determine the position of the housing relative to the adapter sleeve on the shaft. For bearings that have to be relubricated from the side, the grease fitting in the housing cap should always face away from the locknut on the adapter sleeve. Where housings are mounted on the end of a shaft, grease should be supplied at the end cover side. Be sure to position the base correctly since the cap only fits in one direction.
4. Position the housing on the support surface. Fit the attachment bolts but do not tighten them (fig. 31).
5. Mount the first V-ring together with one labyrinth ring on the shaft in the correct position (fig. 32a). The lip of the V-ring should point towards the bearing. Place the split ring parts over the V-ring and labyrinth ring and screw them together (fig. 32b). The two parts of this split ring are not interchangeable. Check to see that they carry the same identification.
6. Mount the bearing on the shaft (fig. 32c) – either directly on a stepped shaft or using an adapter sleeve. Fill the bearing with grease. The remainder of the suggested grease quantity can be placed in the housing, equally distributed on each side of the bearing (See grease fill).
7. Mount the second seal according to step 5 (fig. 32d). If the housing is to be used on the end of a shaft, omit the second seal and insert an end cover in the housing base instead.
8. Use the hollow O-section cord to fix the labyrinth ring in position on the shaft (fig. 32c). Use a screwdriver to fit the cords while rotating the shaft, taking care not to damage the cords. Mount the O-rings on the seal outer diameter.
9. Install the shaft with bearing and seals in the housing base (fig. 33a) taking care that the hollow O-section cords are not damaged.
10. For locating bearing arrangements put one locating ring on each side of the bearing.
11. Carefully align the housing base. Use the vertical markings at the middle of the side faces and end faces of the housing base to help facilitate this (fig. 33b). Tighten the attachment bolts (fig. 33c).
12. Check the cap and base to make sure they have the same identification. Install the cap onto the base (fig. 34a) and tighten the cap bolts to the torque specified in the table.
13. Fully tighten the attachment bolts in the housing base (fig. 34b). Suggested tightening torques are given in the table.
14. Finally, before the first test run, rotate the shaft and supply grease via the fitting until it purges from the labyrinth rings (fig. 34c). Use the same grease for the bearing and the labyrinth rings.

Fig. 31

Fig. 32

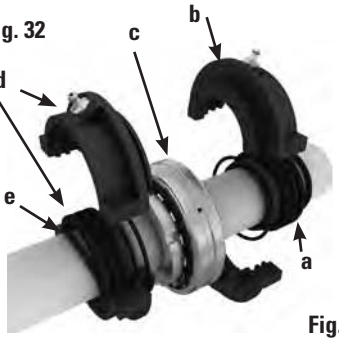

Fig. 33

Fig. 34

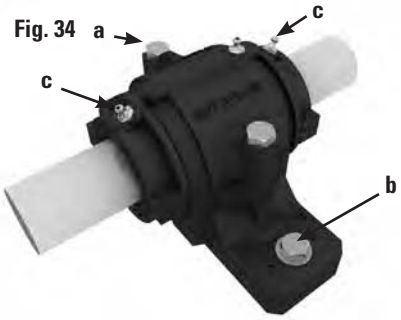

GREASE FILL

- For normal industrial applications, fill bearing void to 100 percent and housing void to 40–60 percent.
- For low-speed applications (less than 20 RPM), fill bearing void to 100 percent and housing void to 60–100 percent.
- For high-speed applications (above 70 percent of the bearings thermal speed rating), fill bearing void to 100 percent and housing void to 30–40 percent.

Contact a Timken engineer with any questions.

ADDITIONAL REFERENCE FOR BEARING MOUNTING

Timken Industrial Maintenance Manual (order no. 10213), Timken Spherical Roller Bearing Catalog (order no. 10446), pages 14–41 or www.timken.com.

TABLE 19. TIGHTENING TORQUE – CAP BOLTS AND ATTACHMENT BOLTS

	Cap Bolts		Attachment Bolts	
Housing SNT	Bolt Size	Torque	Bolt Size	Torque
		Nm		Nm
505, 205	M10x40	**50**	M12	**80**
505-605-206-305	M10x40	**50**	M12	**80**
507-606, 207	M10x50	**50**	M12	**80**
508-607, 208-307	M10x50	**50**	M12	**80**
509, 209	M10x50	**50**	M12	**80**
510-60, 208-307	M10x55	**50**	M12	**80**
511-609, 211	M12x60	**80**	M16	**200**
512-610, 212	M12x60	**80**	M16	**200**
513-611,213	M12x65	**80**	M16	**200**
515-612, 215	M12x65	**80**	M16	**200**
516-613, 216	M12x70	**80**	M20	**385**
517, 217	M12x80	**80**	M20	**385**
518-615, 218	M16x19	**150**	M20	**385**
519-616	M16x19	**150**	M20	**385**
520-617	M20x200	**200**	M24	**665**
522-619	M20x100	**200**	M24	**665**
524-620	M20x110	**200**	M24	**665**
526	M24x130	**350**	M24	**665**
528	M24x130	**350**	M30	**1310**
530	M24x130	**350**	M30	**1310**
532	M24x130	**350**	M30	**1310**

⚠ WARNING

Failure to observe the following warnings could create a risk of death or serious injury.

Proper maintenance and handling practices are critical. Always follow installation instructions and maintain proper lubrication.

Overheated bearings can ignite explosive atmospheres. Special care must be taken to properly select, install, maintain, and lubricate housed unit bearings that are used in or near atmospheres that may contain explosive levels of combustible gases or accumulations of dust such as from grain, coal, or other combustible materials. Consult your equipment designer or supplier for installation and maintenance instructions.

⚠ CAUTION

Failure to follow these cautions could create a risk of injury.

If a hammer and bar are used for installation or removal of a part, use a mild steel bar (e.g., 1010 or 1020 grade). Mild steel bars are less likely to cause release of high speed fragments from the hammer or bar or the part being removed.

CAUTION

Failure to follow these cautions may result in property damage.

Do not use damaged housed units. The use of a damaged housed unit can result in equipment damage and/or injury.

This information is not intended to substitute for the specific recommendations of your equipment suppliers.

Every reasonable effort has been made to ensure the accuracy of the information contained in this writing, but no liability is accepted for errors, omissions or for any other reason.

TWO-BOLT SNT HOUSINGS FOR TAPERED BORE BEARINGS

- The basic numbers for ordering plummer block housings and components are listed in the table below.
- Each housing includes the housing cap, base and cap bolts.
- Housings shown are furnished in cast iron. If cast steel is desired, add the letter S to the alpha prefix (e.g., SNTS 518). If ductile iron is desired, add the letter D to the alpha prefix (e.g., SNTD 505).

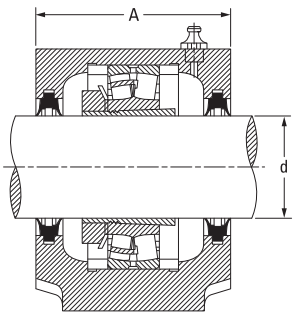

Double-Lip Seal

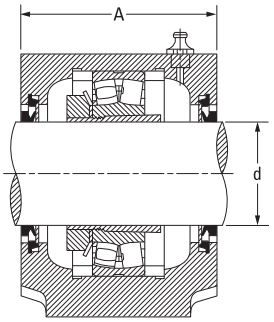

V-Ring Seal

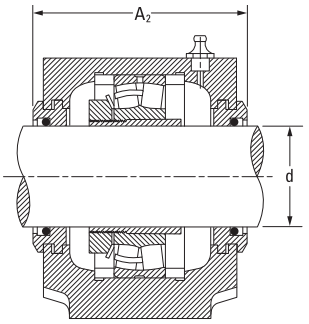

Labyrinth Seal

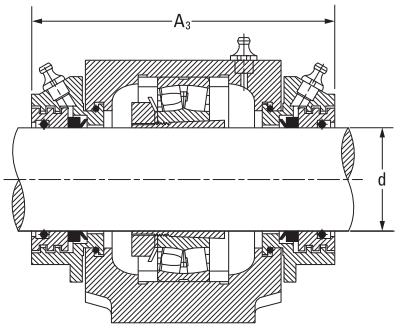

Taconite Seal

Shaft Dia. d	Housing	Bearing	Locating Rings[1] O.D. x Width	Adapter Sleeve[2]	Locknut[3]	Lockwasher[3]	Double-Lip Seal[4]	V-Ring Seal[4]	Labyrinth Seal[3]	Taconite Seal[3]	End Cover[3]
mm											
20	SNT 505 SNT 506-605	22205K 21305K	SR52X3.5 SR62X7.5	H305 H305	KM5 KM5	MB5 MB5	– TSNG605	VR505 VR605	LO505 LO605	TA505 TA605	EC505 EC506-605
25	SNT 506-605 SNT 507-606	22206K 21306K	SR62X6 SR72X7.5	H306 H306	KM6 KM6	MB6 MB6	– TSNG606	VR506 VR606	LO506 LO606	TA506 TA606	EC506-605 EC507-606
30	SNT 507-606 SNT 508-607	22207K 21307K	SR72X5.5 SR80X9	H307 H307	KM7 KM7	MB7 MB7	TSNG507 TSNG607	VR507 VR607	LO507 LO607	TA507 TA607	EC507-606 EC508-607
35	SNT 508-607 SNT 510-608 SNT 510-608	22208K 21308K 22308K	SR80X8 SR90X9 SR90X4	H308 H308 H2308	KM8 KM8 KM8	MB8 MB8 MB8	TSNG508 TSNG608 TSNG608	VR508 VR608 VR608	LO508 LO608 LO608	TA508 TA608 TA608	EC508-607 EC510-608 EC510-608
40	SNT 509 SNT 511-609 SNT 511-609	22209K 21309K 22309K	SR85X3.5 SR100X9.5 SR100X4	H309 H309 H2309	KM9 KM9 KM9	MB9 MB9 MB9	TSNG509 TSNG609 TSNG609	VR509 VR609 VR609	LO509 LO609 LO609	TA509 TA609 TA609	EC509 EC511-609 EC511-609
45	SNT 510-608 SNT 512-610 SNT 512-610	22210K 21310K 22310K	SR90X9 SR110X10.5 SR110X4	H310 H310 H2310	KM10 KM10 KM10	MB10 MB10 MB10	TSNG510 TSNG610 TSNG610	VR510 VR610 VR610	LO510 LO610 LO610	TA510 TA610 TA610	EC510-608 EC512-610 EC512-610
50	SNT 511-609 SNT 513-611 SNT 513-611	22211K 21311K 22311K	SR100X9.5 SR120X11 SR120X4	H311 H311 H2311	KM11 KM11 KM11	MB11 MB11 MB11	TSNG511 TSNG611 TSNG611	VR511 VR611 VR611	LO511 LO611 LO611	TA511 TA611 TA611	EC511-609 EC513-611 EC513-611

[1]Locating rings = minimum two required for fixed position, sold one piece per box.
[2]Adapter sleeve assembly includes one sleeve, one locknut and one lockwasher.
[3]Labyrinth, taconite seal, end cover, locknut, lockwasher, sold one piece per box.
[4]Double-lip and V-ring seals sold two pieces per box.

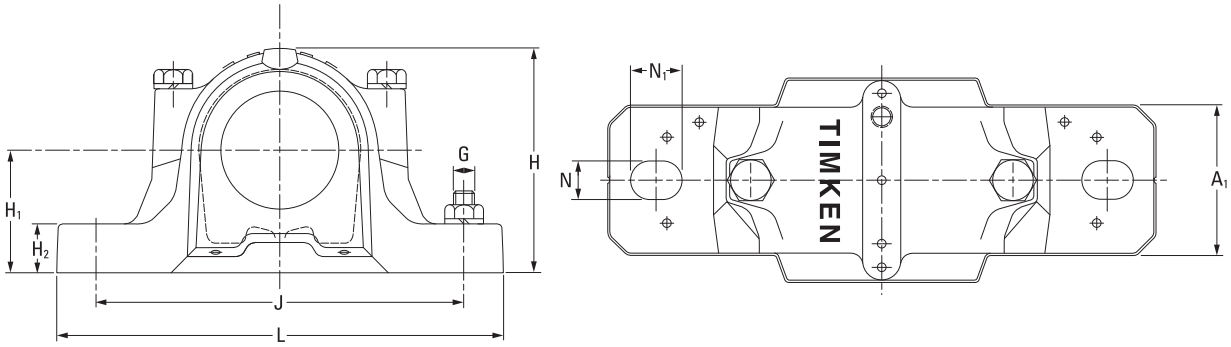

Housing Dimensions													2 Bolts Req'd	Housing Mass
A	A_1	A_2	A_3	H	H_1	H_2	J min	J	J max	L	N	N_1	G	
mm	mm	mm	mm	mm	mm	mm	mm	mm	mm	mm	mm	mm	mm	kg
67	46	80	130	74	40	19	123	130	137	165	15	20	12	1.5
77	52	89	135	89	50	22	143	150	157	185	15	20	12	2.0
77	52	89	135	89	50	22	143	150	157	185	15	20	12	2.0
82	52	94	140	93	50	22	143	150	157	185	15	20	12	2.2
82	52	94	140	93	50	22	143	150	157	185	15	20	12	2.2
85	60	97	145	108	60	25	165	170	175	205	15	20	12	2.9
85	60	97	145	108	60	25	165	170	175	205	15	20	12	2.9
90	60	102	150	113	60	25	165	170	175	205	15	20	12	3.2
90	60	102	150	113	60	25	165	170	175	205	15	20	12	3.2
85	60	97	150	109	60	25	165	170	175	205	15	20	12	2.9
95	70	107	155	128	70	28	205	210	215	255	18	24	16	4.5
95	70	107	155	128	70	28	205	210	215	255	18	24	16	4.5
90	60	102	150	113	60	25	165	170	175	205	15	20	12	3.2
105	70	117	165	134	70	30	205	210	215	255	18	24	16	5.3
105	70	117	165	134	70	30	205	210	215	255	18	24	16	5.3
95	70	107	155	128	70	28	205	210	215	255	18	24	16	4.5
110	80	122	170	150	80	30	224	230	236	275	18	24	16	6.6
110	80	122	170	150	80	30	224	230	236	275	18	24	16	6.6

Continued on next page.

TWO-BOLT SNT HOUSINGS FOR TAPERED BORE BEARINGS – *continued*

- The basic numbers for ordering plummer block housings and components are listed in the table below.
- Each housing includes the housing cap, base and cap bolts.
- Housings shown are furnished in cast iron. If cast steel is desired, add the letter S to the alpha prefix (e.g., SNTS 518). If ductile iron is desired, add the letter D to the alpha prefix (e.g., SNTD 505).

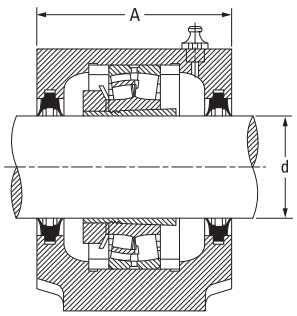

Double-Lip Seal

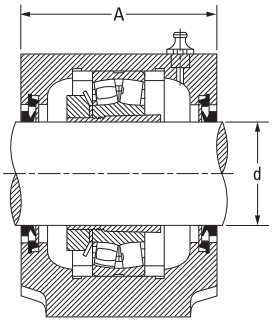

V-Ring Seal

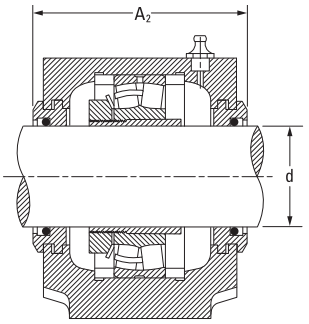

Labyrinth Seal

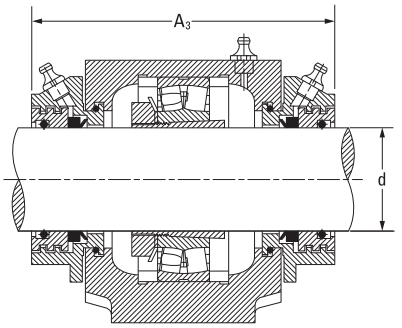

Taconite Seal

Continued from previous page.

Shaft Dia. d	Housing	Bearing	Locating Rings[1] O.D. x Width	Adapter Sleeve[2]	Locknut[3]	Lockwasher[3]	Double-Lip Seal[4]	V-Ring Seal[4]	Labyrinth Seal[3]	Taconite Seal[3]	End Cover[3]
mm											
55	SNT 512-610 SNT 515-612 SNT 515-612	22212K 21312K 22312K	SR110X10 SR130X12.5 SR130X5	H312 H312 H2312	KM12 KM12 KM12	MB12 MB12 MB12	TSNG512 TSNG612 TSNG612	VR512 VR612 VR612	LO512 LO612 LO612	TA512 TA612 TA612	EC512-610 EC515-612 EC515-612
60	SNT 513-611 SNT 516-613 SNT 516-613	22213K 21313K 22313K	SR120X10 SR140X12.5 SR140X5	H313 H313 H2313	KM13 KM13 KM13	MB13 MB13 MB13	TSNG513 TSNG613 TSNG613	VR513 VR613 VR613	LO513 LO613 LO613	TA513 TA613 TA613	EC513-611 EC516-613 EC516-613
65	SNT 515-612 SNT 518-615 SNT 518-615	22215K 21315K 22315K	SR130X12.5 SR160X14 SR160X5	H315 H315 H2315	KM15 KM15 KM15	MB15 MB15 MB15	TSNG515 TSNG615 TSNG615	VR515 VR615 VR615	LO515 LO615 LO615	TA515 TA615 TA615	EC515-612 EC518-615 EC518-615
70	SNT 516-613 SNT 519-616 SNT 519-616	22216K 21316K 22316K	SR140X12.5 SR170X14.5 SR170X5	H316 H316 H2316	KM16 KM16 KM16	MB16 MB16 MB16	TSNG516 TSNG616 TSNG616	VR516 VR616 VR616	LO516 LO616 LO616	TA516 TA616 TA616	EC516-613 EC519-616 EC519-616
75	SNT 517 SNT 520-617 SNT 520-617	22217K 21317K 22317K	SR150X12.5 SR180X14.5 SR180X5	H317 H317 H2317	KM17 KM17 KM17	MB17 MB17 MB17	TSNG517 TSNG617 TSNG617	VR517 VR617 VR617	LO517 LO617 LO617	TA517 TA617 TA617	EC517 EC520-617 EC520-617
80	SNT 518-615 SNT 518-615	22218K 23218K	SR160X12.5 SR160X6.25	H318 H2318	KM18 KM18	MB18 MB18	TSNG518 TSNG518	VR518 VR518	LO518 LO518	TA518 TA518	EC518-615 EC518-615
85	SNT 519-616 SNT 522-619 SNT 522-619	22219K 21319K 22319K	SR170X12.5 SR200X17.5 SR200X6.5	H319 H319 H2319	KM19 KM19 KM19	MB19 MB19 MB19	TSNG519 TSNG619 TSNG619	VR519 VR619 VR619	LO519 LO619 LO619	TA519 TA619 TA619	EC519-616 EC522-619 EC522-619

[1]Locating rings = minimum two required for fixed position, sold one piece per box.
[2]Adapter sleeve assembly includes one sleeve, one locknut and one lockwasher.
[3]Labyrinth, taconite seal, end cover, locknut, lockwasher, sold one piece per box.
[4]Double-lip and V-ring seals sold two pieces per box.

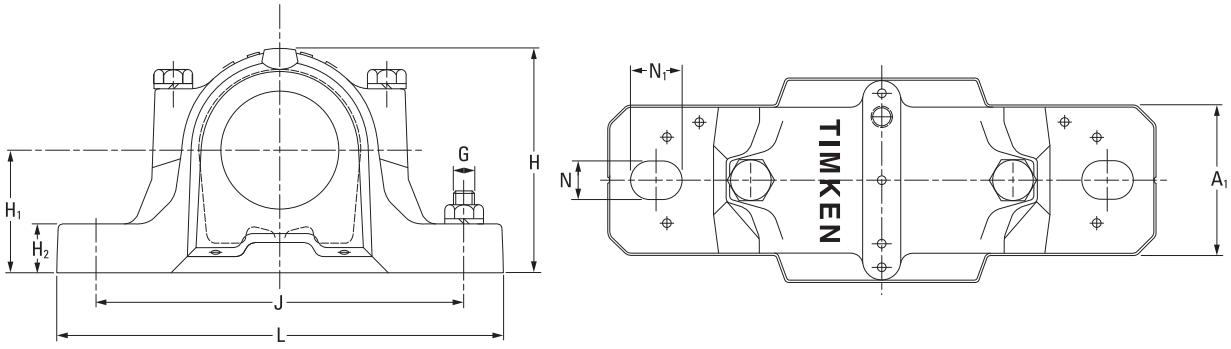

Housing Dimensions													2 Bolts Req'd	Housing Mass
A	A_1	A_2	A_3	H	H_1	H_2	J min	J	J max	L	N	N_1	G	
mm	mm	mm	mm	mm	mm	mm	mm	mm	mm	mm	mm	mm	mm	kg
105	70	117	165	134	70	30	205	210	215	255	18	24	16	5.3
115	80	127	175	156	80	30	222	230	238	280	18	24	16	6.9
115	80	127	175	156	80	30	222	230	238	280	18	24	16	6.9
110	80	122	170	150	80	30	224	230	236	275	18	24	16	6.6
120	90	138	180	177	95	32	252	260	268	315	22	28	20	9.7
120	90	138	180	177	95	32	252	260	268	315	22	28	20	9.7
115	80	127	175	156	80	30	222	230	238	280	18	24	16	6.9
140	100	158	225	194	100	35	285	290	295	345	22	28	20	13.1
140	100	158	225	194	100	35	285	290	295	345	22	28	20	13.1
120	90	138	180	177	95	32	252	260	268	315	22	28	20	9.7
145	100	163	220	212	112	35	285	290	295	345	22	28	20	14.0
145	100	163	220	212	112	35	285	290	295	345	22	28	20	14.0
125	90	143	210	183	95	32	252	260	268	320	22	28	20	10.4
160	110	178	235	218	112	40	314	320	326	380	26	32	24	17.6
160	110	178	235	218	112	40	314	320	326	380	26	32	24	17.6
140	100	158	225	194	100	35	285	290	295	345	22	28	20	13.1
140	100	158	225	194	100	35	285	290	295	345	22	28	20	13.1
145	100	163	220	212	112	35	285	290	295	345	22	28	20	14.0
175	120	191	250	242	125	45	356	344	350	410	32	26	24	22.3
175	120	191	250	242	125	45	344	350	356	410	26	32	24	22.3

Continued on next page.

TWO-BOLT SNT HOUSINGS FOR TAPERED BORE BEARINGS *– continued*

- The basic numbers for ordering plummer block housings and components are listed in the table below.
- Each housing includes the housing cap, base and cap bolts.
- Housings shown are furnished in cast iron. If cast steel is desired, add the letter S to the alpha prefix (e.g., SNTS 518). If ductile iron is desired, add the letter D to the alpha prefix (e.g., SNTD 505).

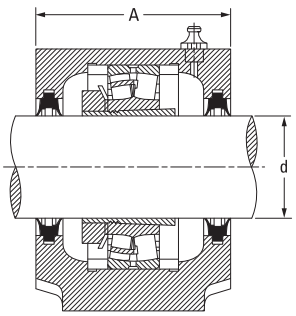

Double-Lip Seal

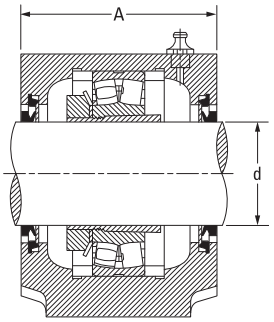

V-Ring Seal

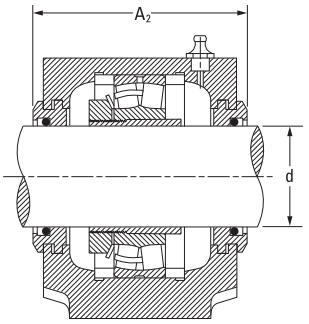

Labyrinth Seal

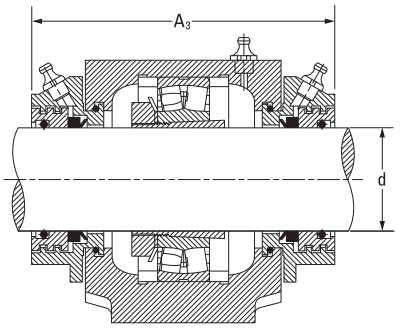

Taconite Seal

Continued from previous page.

Shaft Dia. d	Housing	Bearing	Locating Rings[1] O.D. x Width	Adapter Sleeve[2]	Locknut[3]	Lockwasher[3]	Double-Lip Seal[4]	V-Ring Seal[4]	Labyrinth Seal[3]	Taconite Seal[3]	End Cover[3]
mm											
90	SNT 520-617 SNT 520-617 SNT 524-620 SNT 524-620	22220K 23220K 21320K 22320K	SR180X12 SR180X4.85 SR215X19.5 SR215X6.5	H320 H2320 H2320 H2320	KM20 KM20 KM20 KM20	MB20 MB20 MB20 MB20	TSNG520 TSNG520 TSNG620 TSNG620	VR520 VR520 VR620 VR620	LO520 LO520 LO620 LO620	TA520 TA520 TA620 TA620	EC520-617 EC520-617 EC524-620 EC524-620
100	SNT 522-619 SNT 522-619	22222K 23222K	SR200X13.5 SR200X5.1	H322 H2322	KM22 KM22	MB22 MB22	TSNG522 TSNG522	VR522 VR522	LO522 LO522	TA522 TA522	EC522-619 EC522-619
110	SNT 524-620 SNT 524-620	22224K 23224K	SR215X14 SR215X5	H3124 H2324	KM24 KM24	MB24 MB24	TSNG524 TSNG524	VR524 VR524	LO524 LO524	TA524 TA524	EC524-620 EC524-620
115	SNT 526 SNT 526	22226K 23226K	SR230X13 SR230X5	H3126 H2326	KM26 KM26	MB26 MB26	TSNG526 TSNG526	VR526 VR526	LO526 LO526	TA526 TA526	EC526 EC526
125	SNT 528 SNT 528	22228K 23228K	SR250X15 SR250X5	H3128 H2328	KM28 KM28	MB28 MB28	TSNG528 TSNG528	VR528 VR528	LO528 LO528	TA528 TA528	EC528 EC528
135	SNT 530 SNT 530	22230K 23230K	SR270X16.5 SR270X5	H3130 H2330	KM30 KM30	MB30 MB30	TSNG530 TSNG530	VR530 VR530	LO530 LO530	TA530 TA530	EC530 EC530
140	SNT 532 SNT 532	22232K 23232K	SR290X17 SR290X5	H3132 H2332	KM32 KM32	MB32 MB32	TSNG532 TSNG532	VR532 VR532	LO532 LO532	TA532 TA532	EC532 EC532

[1]Locating rings = minimum two required for fixed position, sold one piece per box.
[2]Adapter sleeve assembly includes one sleeve, one locknut and one lockwasher.
[3]Labyrinth, taconite seal, end cover, locknut, lockwasher, sold one piece per box.
[4]Double-lip and V-ring seals sold two pieces per box.

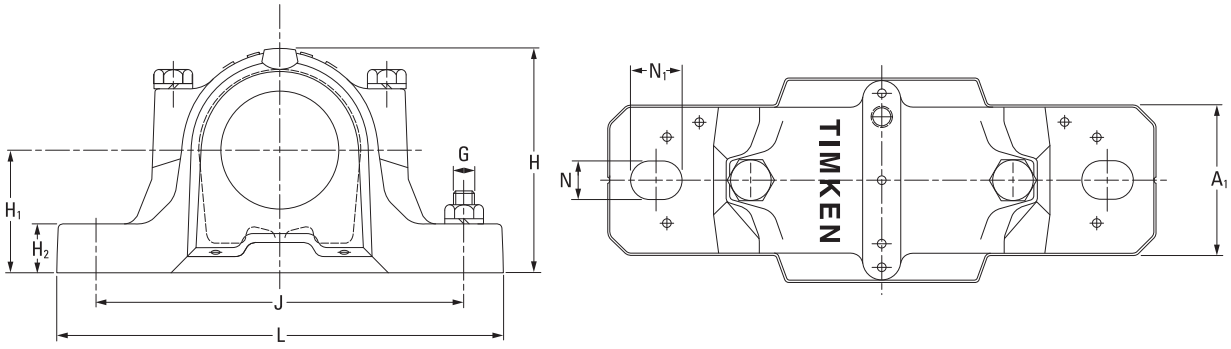

Housing Dimensions													2 Bolts Req'd	Housing Mass
A	A_1	A_2	A_3	H	H_1	H_2	J min	J	J max	L	N	N_1	G	
mm	mm	mm	mm	mm	mm	mm	mm	mm	mm	mm	mm	mm	mm	kg
160	110	178	235	218	112	40	314	320	326	380	26	32	24	17.6
160	110	178	235	218	112	40	314	320	326	380	26	32	24	17.6
185	120	199	260	271	140	45	344	350	356	410	26	32	24	26.5
185	120	199	260	271	140	45	344	350	356	410	26	32	24	26.5
175	120	191	250	242	125	45	344	350	356	410	26	32	24	22.3
175	120	191	250	242	125	45	344	350	356	410	26	32	24	22.3
185	120	199	260	271	140	45	344	350	356	410	26	32	24	26.5
185	120	199	260	271	140	45	344	350	356	410	26	32	24	26.5
190	130	208	265	290	150	50	373	380	387	445	28	35	24	34.0
190	130	208	265	290	150	50	373	380	387	445	28	35	24	34.0
205	150	223	285	302	150	50	413	420	427	500	35	42	30	39.0
205	150	223	285	302	150	50	413	420	427	500	35	42	30	39.0
220	160	241	295	323	160	60	443	450	457	530	35	42	30	48.0
220	160	241	295	323	160	60	443	450	457	530	35	42	30	48.0
235	160	254	315	344	170	60	463	470	477	550	35	42	30	54.5
235	160	254	315	344	170	60	463	470	477	550	35	42	30	54.5

FOUR-BOLT FSNT HOUSINGS FOR TAPERED BORE BEARINGS

- The basic numbers for ordering plummer block housings and components are listed in the table below.
- Each housing includes the housing cap, base and cap bolts.
- Assemblies shown are furnished in cast iron. If cast steel is desired, add the letter S to the alpha prefix (e.g., FSNTS 518). If ductile iron is desired, add the letter D to the alpha prefix (e.g., FSNTD 505).

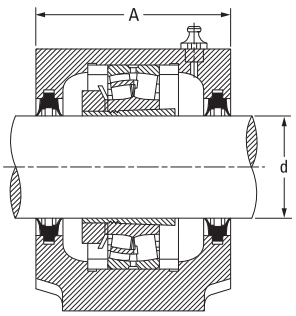

Double-Lip Seal

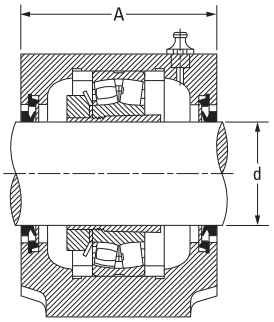

V-Ring Seal

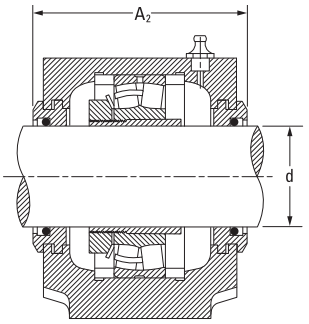

Labyrinth Seal

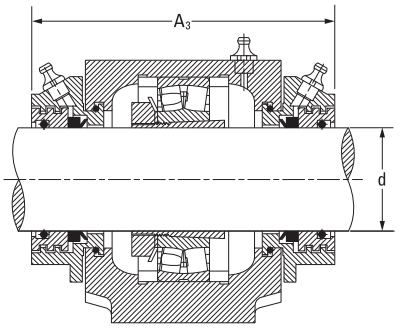

Taconite Seal

Shaft Dia. d	Housing	Bearing	Locating Rings[1] O.D. x Width	Adapter Sleeve[2]	Locknut[3]	Lockwasher[3]	Double-Lip Seal[4]	V-Ring Seal[4]	Labyrinth Seal[3]	Taconite Seal[3]	End Cover[3]
mm											
40	FSNT 511-609 FSNT 511-609	21309K 22309K	SR100X9.5 SR100X4	H309 H2309	KM9 KM9	MB9 MB9	TSNG609 TSNG609	VR609 VR609	LO609 LO609	TA609 TA609	EC511-609 EC511-609
45	FSNT 512-610 FSNT 512-610	21310K 22310K	SR110X10.5 SR110X4	H310 H2310	KM10 KM10	MB10 MB10	TSNG610 TSNG610	VR610 VR610	LO610 LO610	TA610 TA610	EC512-610 EC512-610
50	FSNT 511-609 FSNT 513-611 FSNT 513-611	22211K 21311K 22311K	SR100X9.5 SR120X11 SR120X4	H311 H311 H2311	KM11 KM11 KM11	MB11 MB11 MB11	TSNG511 TSNG611 TSNG611	VR511 VR611 VR611	LO511 LO611 LO611	TA511 TA611 TA611	EC511-609 EC513-611 EC513-611
55	FSNT 512-610 FSNT 515-612 FSNT 515-612	22212K 21312K 22312K	SR110X10 SR130X12.5 SR130X5	H312 H312 H2312	KM12 KM12 KM12	MB12 MB12 MB12	TSNG512 TSNG612 TSNG612	VR512 VR612 VR612	LO512 LO612 LO612	TA512 TA612 TA612	EC512-610 EC515-612 EC515-612
60	FSNT 513-611 FSNT 516-613 FSNT 516-613	22213K 21313K 22313K	SR120X10 SR140X12.5 SR140X5	H313 H313 H2313	KM13 KM13 KM13	MB13 MB13 MB13	TSNG513 TSNG613 TSNG613	VR513 VR613 VR613	LO513 LO613 LO613	TA513 TA613 TA613	EC513-611 EC516-613 EC516-613
65	FSNT 515-612 FSNT 518-615 FSNT 518-615	22215K 21315K 22315K	SR130X12.5 SR160X14 SR160X5	H315 H315 H2315	KM15 KM15 KM15	MB15 MB15 MB15	TSNG515 TSNG615 TSNG615	VR515 VR615 VR615	LO515 LO615 LO615	TA515 TA615 TA615	EC515-612 EC518-615 EC518-615
70	FSNT 516-613 FSNT 519-616 FSNT 519-616	22216K 21316K 22316K	SR140X12.5 SR170X14.5 SR170X5	H316 H316 H2316	KM16 KM16 KM16	MB16 MB16 MB16	TSNG516 TSNG616 TSNG616	VR516 VR616 VR616	LO516 LO616 LO616	TA516 TA616 TA616	EC516-613 EC519-616 EC519-616
75	FSNT 517 FSNT 520-617 FSNT 520-617	22217K 21317K 22317K	SR150X12.5 SR180X14.5 SR180X5	H317 H317 H2317	KM17 KM17 KM17	MB17 MB17 MB17	TSNG517 TSNG617 TSNG617	VR517 VR617 VR617	LO517 LO617 LO617	TA517 TA617 TA617	EC517 EC520-617 EC520-617

[1]Locating rings = minimum two required for fixed position, sold one piece per box.
[2]Adapter sleeve assembly includes one sleeve, one locknut and one lockwasher.
[3]Labyrinth, taconite seal, end cover, locknut, lockwasher, sold one piece per box.
[4]Double-lip and V-ring seals sold two pieces per box.

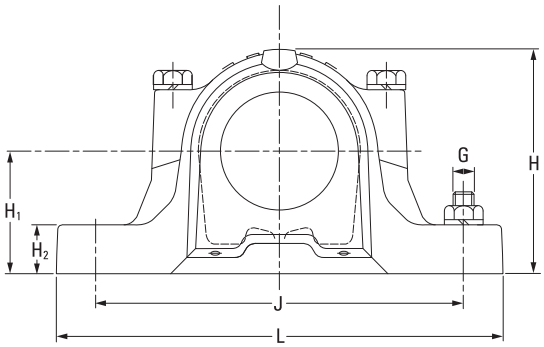

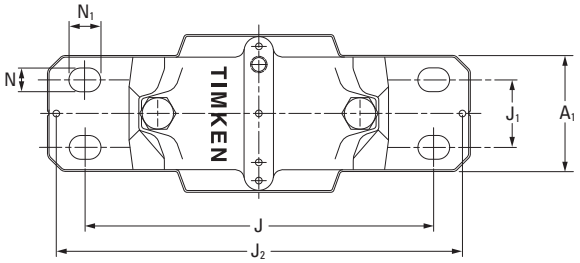

Housing Dimensions													4 Bolts Req'd	Housing Mass
A	A_1	A_2	A_3	H	H_1	H_2	J	J_1	J_2	L	N	N_1	G	
mm	mm	mm	mm	mm	mm	mm	mm	mm	mm	mm	mm	mm	mm	kg
95	70	107	155	128	70	28	210	35	234	255	15	20	12	4.5
95	70	107	155	128	70	28	210	35	234	255	15	20	12	4.5
105	70	117	165	134	70	30	210	35	234	255	15	20	12	5.3
105	70	117	165	134	70	30	210	35	234	255	15	20	12	5.3
95	70	107	155	128	70	28	210	35	234	255	15	20	12	4.5
110	80	122	170	150	80	30	230	40	252	275	15	20	12	6.6
110	80	122	170	150	80	30	230	40	252	275	15	20	12	6.6
105	70	117	165	134	70	30	210	35	234	255	15	20	12	5.3
115	80	127	175	156	80	30	230	40	257	280	15	20	12	6.9
115	80	127	175	156	80	30	230	40	257	280	15	20	12	6.9
110	80	122	170	150	80	30	230	40	252	275	15	20	12	6.6
120	90	138	180	177	95	32	260	50	288	315	18	24	16	9.7
120	90	138	180	177	95	32	260	50	288	315	18	24	16	9.7
115	80	127	175	156	80	30	230	40	257	280	15	20	12	6.9
140	100	158	225	194	100	35	290	50	317	345	18	24	16	13.1
140	100	158	225	194	100	35	290	50	317	345	18	24	16	13.1
120	90	138	180	177	95	32	260	50	288	315	18	24	16	9.7
145	100	163	220	212	112	35	290	50	317	345	18	24	16	14.0
145	100	163	220	212	112	35	290	50	317	345	18	24	16	14.0
125	90	143	210	183	95	32	260	50	292	320	18	24	16	10.4
160	110	178	235	218	112	40	320	60	348	380	18	24	16	17.6
160	110	178	235	218	112	40	320	60	348	380	18	24	16	17.6

Continued on next page.

FOUR-BOLT FSNT HOUSINGS FOR TAPERED BORE BEARINGS – *continued*

- The basic numbers for ordering plummer block housings and components are listed in the table below.
- Each housing includes the housing cap, base and cap bolts.
- Assemblies shown are furnished in cast iron. If cast steel is desired, add the letter S to the alpha prefix (e.g., FSNTS 518). If ductile iron is desired, add the letter D to the alpha prefix (e.g., FSNTD 505).

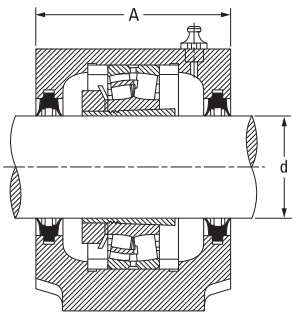

Double-Lip Seal

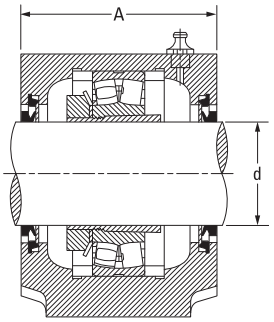

V-Ring Seal

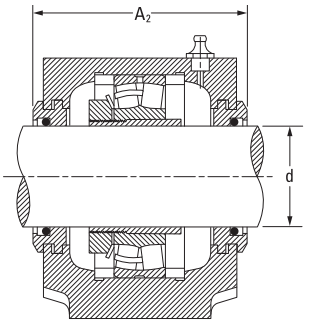

Labyrinth Seal

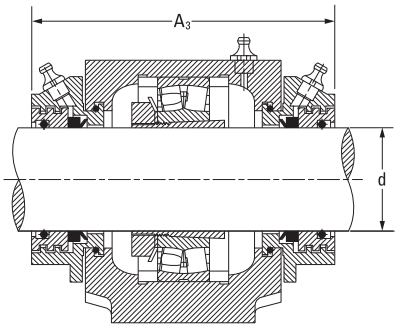

Taconite Seal

Continued from previous page.

Shaft Dia. d	Housing	Bearing	Locating Rings[1] O.D. x Width	Adapter Sleeve[2]	Locknut[3]	Lockwasher[3]	Double-Lip Seal[4]	V-Ring Seal[4]	Labyrinth Seal[3]	Taconite Seal[3]	End Cover[3]
mm											
80	FSNT 518-615 FSNT 518-615	22218K 23218K	SR160X12.5 SR160X6.25	H318 H2318	KM18 KM18	MB18 MB18	TSNG518 TSNG518	VR518 VR518	LO518 LO518	TA518 TA518	EC518-615 EC518-615
85	FSNT 519-616 FSNT 522-619 FSNT 522-619	22219K 21319K 22319K	SR170X12.5 SR200X17.5 SR200X6.5	H319 H319 H2319	KM19 KM19 KM19	MB19 MB19 MB19	TSNG519 TSNG619 TSNG619	VR519 VR619 VR619	LO519 LO619 LO619	TA519 TA619 TA619	EC519-616 EC522-619 EC522-619
90	FSNT 520-617 FSNT 520-617 FSNT 524-620 FSNT 524-620	22220K 23220K 21320K 22320K	SR180X12 SR180X4.85 SR215X19.5 SR215X6.5	H320 H2320 H320 H2320	KM20 KM20 KM20 KM20	MB20 MB20 MB20 MB20	TSNG520 TSNG520 TSNG620 TSNG620	VR520 VR520 VR620 VR620	LO520 LO520 LO620 LO620	TA520 TA520 TA620 TA620	EC520-617 EC520-617 EC524-620 EC524-620
100	FSNT 522-619 FSNT 522-619	22222K 23222K	SR200X13.5 SR200X5.1	H322 H2322	KM22 KM22	MB22 MB22	TSNG522 TSNG522	VR522 VR522	LO522 LO522	TA522 TA522	EC522-619 EC522-619
110	FSNT 524-620 FSNT 524-620	22224K 23224K	SR215X14 SR215X5	H3124 H2324	KM24 KM24	MB24 MB24	TSNG524 TSNG524	VR524 VR524	LO524 LO524	TA524 TA524	EC524-620 EC524-620
115	FSNT 526 FSNT 526	22226K 23226K	SR230X13 SR230X5	H3126 H2326	KM26 KM26	MB26 MB26	TSNG526 TSNG526	VR526 VR526	LO526 LO526	TA526 TA526	EC526 EC526
125	FSNT 528 FSNT 528	22228K 23228K	SR250X15 SR250X5	H3128 H2328	KM28 KM28	MB28 MB28	TSNG528 TSNG528	VR528 VR528	LO528 LO528	TA528 TA528	EC528 EC528
135	FSNT 530 FSNT 530	22230K 23230K	SR270X16.5 SR270X5	H3130 H2330	KM30 KM30	MB30 MB30	TSNG530 TSNG530	VR530 VR530	LO530 LO530	TA530 TA530	EC530 EC530
140	FSNT 532 FSNT 532	22232K 23232K	SR290X17 SR290X5	H3132 H2332	KM32 KM32	MB32 MB32	TSNG532 TSNG532	VR532 VR532	LO532 LO532	TA532 TA532	EC532 EC532

[1]Locating rings = minimum two required for fixed position, sold one piece per box.
[2]Adapter sleeve assembly includes one sleeve, one locknut and one lockwasher.
[3]Labyrinth, taconite seal, end cover, locknut, lockwasher, sold one piece per box.
[4]Double-lip and V-ring seals sold two pieces per box.

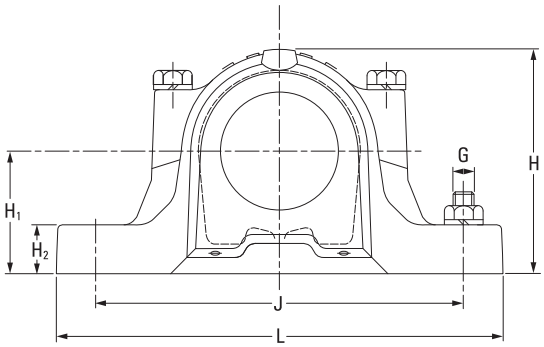

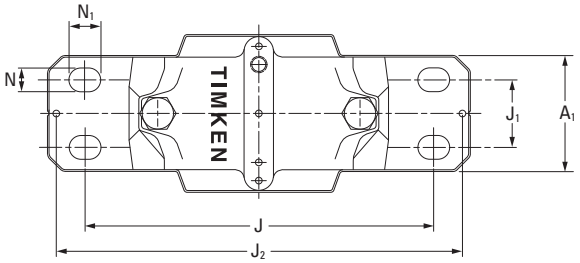

Housing Dimensions													4 Bolts Req'd	Housing Mass
A	A_1	A_2	A_3	H	H_1	H_2	J	J_1	J_2	L	N	N_1	G	
mm	mm	mm	mm	mm	mm	mm	mm	mm	mm	mm	mm	mm	mm	kg
140	100	158	225	194	100	35	290	50	317	345	18	24	16	13.1
140	100	158	225	194	100	35	290	50	317	345	18	24	16	13.1
145	100	163	220	212	112	35	290	50	317	345	18	24	16	14.0
175	120	191	250	242	125	45	350	70	378	410	18	24	16	22.3
175	120	191	250	242	125	45	350	70	378	410	18	24	16	22.3
160	110	178	235	218	112	40	320	60	348	380	18	24	16	17.6
160	110	178	235	218	112	40	320	60	348	380	18	24	16	17.6
185	120	199	260	271	140	45	350	70	378	410	18	24	16	26.5
185	120	199	260	271	140	45	350	70	378	410	18	24	16	26.5
175	120	191	250	242	125	45	350	70	378	410	18	24	16	22.3
175	120	191	250	242	125	45	350	70	378	410	18	24	16	22.3
185	120	199	260	271	140	45	350	70	378	410	18	24	16	26.5
185	120	199	260	271	140	45	350	70	378	410	18	24	16	26.5
190	130	208	265	290	150	50	380	70	414	445	22	28	20	34.0
190	130	208	265	290	150	50	380	70	414	445	22	28	20	34.0
205	150	223	285	302	150	50	420	80	458	500	26	32	24	39.0
205	150	223	285	302	150	50	420	80	458	500	26	32	24	39.0
220	160	241	295	323	160	60	450	90	486	530	26	32	24	48.0
220	160	241	295	323	160	60	450	90	486	530	26	32	24	48.0
235	160	254	315	344	170	60	470	90	506	550	26	32	24	54.5
235	160	254	315	344	170	60	470	90	506	550	26	32	24	54.5

TWO-BOLT SNT HOUSINGS FOR CYLINDRICAL BORE BEARINGS

- The basic numbers for ordering plummer block housings and components are listed in the table below.
- Each housing includes the housing cap, base and cap bolts.
- Assemblies shown are furnished in cast iron. If cast steel is desired, add the letter S to the alpha prefix (e.g., FSNTS 518). If ductile iron is desired, add the letter D to the alpha prefix (e.g., FSNTD 505).
- Seal sleeve for d_a shaft to be supplied by customer and should have same O.D. as d_b.

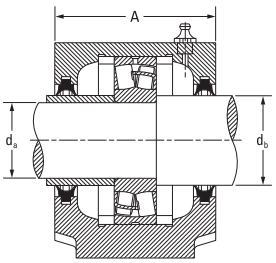

Double-Lip Seal

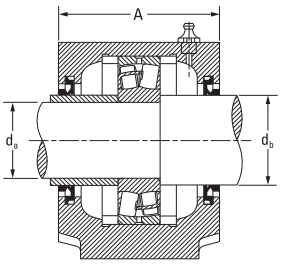

V-Ring Seal

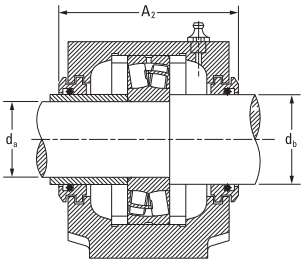

Labyrinth Seal

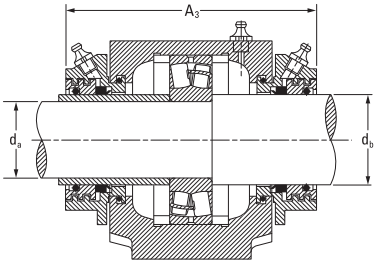

Taconite Seal

Shaft Dia. d_a mm	Shaft Dia. d_b mm	Housing	Bearing	Locating Rings[1] O.D. x Width	Double-Lip Seal[2]	V-Ring Seal[2]	Labyrinth Seal[3]	Taconite Seal[3]	End Cover[3]
25	30	SNT 205 SNT 206-305	22205 21305	SR52X3.5 SR62X7.5	TSNG205 TSNG305	– VR305	LO205 LO305	TA205 TA305	EC506-605 EC507-606
30	35	SNT 206-305 SNT 507-606	22206 21306	SR62X6 SR72X7.5	TSNG206 TSNG306	VR206 VR306	LO206 LO306	TA206 TA306	EC507-606 EC507-606
35	45	SNT 207 SNT 208-307	22207 21307	SR72X5.5 SR80X9	TSNG207 TSNG307	VR207 VR307	LO207 LO307	TA207 TA307	EC509 EC510-608
40	50	SNT 208-307 SNT 510-608 SNT 510-608	22208 21308 22308	SR80X8 SR90X9 SR90X4	TSNG208 TSNG308 TSNG308	VR208 VR308 VR308	LO208 LO308 LO308	TA208 TA308 TA308	EC510-608 EC510-608 EC510-608
45	55	SNT 209 SNT 511-609 SNT 511-609	22209 21309 22309	SR85X3.5 SR100X9.5 SR100X4	TSNG209 TSNG309 TSNG309	VR209 VR309 VR309	LO209 LO309 LO309	TA209 TA309 TA309	EC511-609 EC511-609 EC511-609
50	60	SNT 210 SNT 512-610 SNT 512-610	22210 21310 22310	SR90X9 SR110X10.5 SR110X4	TSNG210 TSNG310 TSNG310	VR210 VR310 VR310	LO210 LO310 LO310	TA210 TA310 TA310	EC512-610 EC512-610 EC512-610
55	65	SNT 211 SNT 513-611 SNT 513-611	22211 21311 22311	SR100X9.5 SR120X11 SR120X4	TSNG211 TSNG311 TSNG311	VR211 VR311 VR311	LO211 LO311 LO311	TA211 TA311 TA311	EC513-611 EC513-611 EC513-611
60	70	SNT 212 SNT 515-612 SNT 515-612	22212 21312 22312	SR110X10 SR130X12.5 SR130X5	TSNG212 TSNG312 TSNG312	VR212 VR312 VR312	LO212 LO312 LO312	TA212 TA312 TA312	EC515-612 EC515-612 EC515-612
65	75	SNT 213 SNT 516-613 SNT 516-613	22213 21313 22313	SR120X10 SR140X12.5 SR140X5	TSNG213 TSNG313 TSNG313	VR213 VR313 VR313	LO213 LO313 LO313	TA213 TA313 TA313	EC516-613 EC516-613 EC516-613
70	80	SNT 517 SNT 517	22314 21314	SR150X5 SR150X13	TSNG314 TSNG314	VR314 VR314	LO314 LO314	TA314 TA314	EC517 EC517

[1]Locating rings = minimum two required for fixed position, sold one piece per box.
[2]Double-lip and V-ring seals sold two pieces per box. Consult your Timken engineer for double-lip seal availability.
[3]Labyrinth, taconite seal and end cover, sold one piece per box.

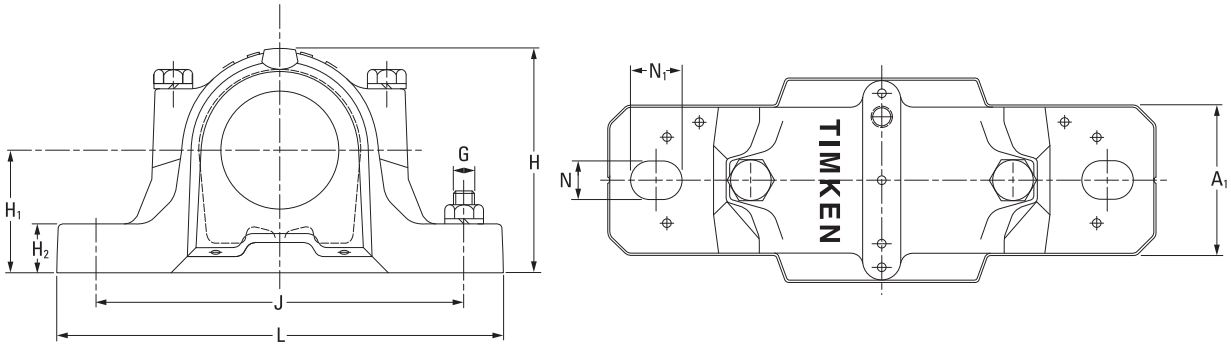

Housing Dimensions													2 Bolts Req'd	Housing Mass
A	A_1	A_2	A_3	H	H_1	H_2	J min	J	J max	L	N	N_1	G	
mm	mm	mm	mm	mm	mm	mm	mm	mm	mm	mm	mm	mm	mm	kg
67	46	90	140	74	40	19	123	130	137	165	15	20	12	1.5
77	52	89	150	89	50	22	143	150	157	185	15	20	12	2.0
77	52	89	150	89	50	22	143	150	157	185	15	20	12	2.0
82	52	94	140	93	50	22	143	150	157	185	15	20	12	2.2
82	52	96	155	93	50	22	143	150	157	185	15	20	12	2.2
85	60	99	160	108	60	25	165	170	175	205	15	20	12	2.9
85	60	99	160	108	60	25	165	170	175	205	15	20	12	2.9
90	60	102	150	113	60	25	165	170	175	205	15	20	12	3.2
90	60	102	150	113	60	25	165	170	175	205	15	20	12	3.2
85	60	97	160	109	60	25	165	170	175	205	15	20	12	2.9
95	70	107	155	128	70	28	205	210	215	255	18	24	16	4.5
95	70	107	155	128	70	28	205	210	215	255	18	24	16	4.5
90	60	102	165	113	60	25	165	170	175	205	15	20	12	3.2
105	70	117	165	134	70	30	205	210	215	255	18	24	16	5.3
105	70	117	165	134	70	30	205	210	215	255	18	24	16	5.3
95	70	107	170	128	70	28	205	210	215	255	18	24	16	4.5
110	80	122	170	150	80	30	224	230	236	275	18	24	16	6.6
110	80	122	170	150	80	30	224	230	236	275	18	24	16	6.6
105	70	117	180	134	70	30	205	210	215	255	18	24	16	5.2
115	80	127	175	156	80	30	222	230	238	280	18	24	16	6.9
115	80	127	175	156	80	30	222	230	238	280	18	24	16	6.9
110	80	128	190	149	80	30	222	230	238	275	18	24	16	6.6
120	90	138	180	177	95	32	252	260	268	315	22	28	20	9.7
120	90	138	180	177	95	32	252	260	268	315	22	28	20	9.7
125	90	143	210	183	95	32	252	260	268	320	22	28	20	10.4
125	90	143	210	183	95	32	252	260	268	320	22	28	20	10.4

Continued on next page.

TWO-BOLT SNT HOUSINGS FOR CYLINDRICAL BORE BEARINGS – *continued*

- The basic numbers for ordering plummer block housings and components are listed in the table below.
- Each housing includes the housing cap, base and cap bolts.
- Assemblies shown are furnished in cast iron. If cast steel is desired, add the letter S to the alpha prefix (e.g., FSNTS 518). If ductile iron is desired, add the letter D to the alpha prefix (e.g., FSNTD 505).
- Seal sleeve for d_a shaft to be supplied by customer and should have same O.D. as d_b.

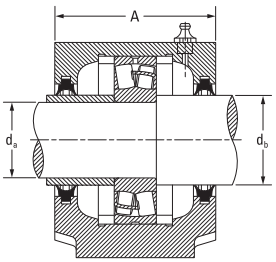

Double-Lip Seal

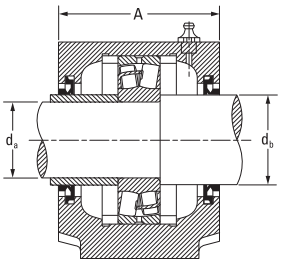

V-Ring Seal

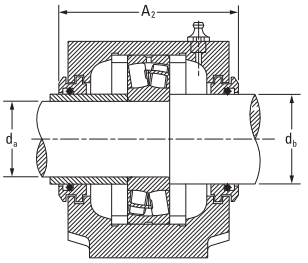

Labyrinth Seal

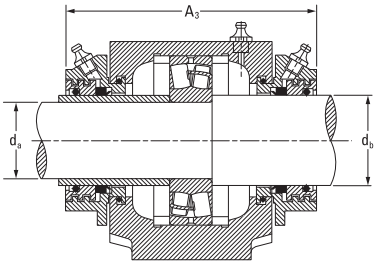

Taconite Seal

Continued from previous page.

Shaft Dia. d_a mm	Shaft Dia. d_b mm	Housing	Bearing	Locating Rings[1] O.D. x Width	Double-Lip Seal[2]	V-Ring Seal[2]	Labyrinth Seal[3]	Taconite Seal[3]	End Cover[3]
75	85	SNT 215 SNT 518-615 SNT 518-615	22215 21315 22315	SR130X12.5 SR160X14 SR160X5	TSNG215 TSNG315 TSNG315	VR215 VR315 VR315	LO215 LO315 LO315	TA215 TA315 TA315	EC518-615 EC518-615 EC518-615
80	90	SNT 216 SNT 519-616 SNT 519-616	22216 21316 22316	SR140X10 SR170X14.5 SR170X5	TSNG216 TSNG316 TSNG316	VR216 VR316 VR316	LO216 LO316 LO316	TA216 TA316 TA316	EC216 EC519-616 EC519-616
85	95	SNT 217 SNT 520-617 SNT 520-617	22217 21317 22317	SR150X12.5 SR180X14.5 SR180X5	TSNG217 TSNG317 TSNG317	VR217 VR317 VR317	LO217 LO317 LO317	TA217 TA317 TA317	EC217 EC520-617 EC520-617
90	100	SNT 218 SNT 218	22218 23218	SR160X12.5 SR160X6.25	TSNG218 TSNG218	VR218 VR218	LO218 LO218	TA218 TA218	EC218 EC218
95	110	SNT 522-619 SNT 522-619	21319 22319	SR200X17.5 SR200X6.5	TSNG319 TSNG319	VR319 VR319	LO319 LO319	TA319 TA319	EC522-619 EC522-619
100	115	SNT 520-617 SNT 520-617 SNT 524-620 SNT 524-620	22220 23220 21320 22320	SR180X12 SR180X4.85 SR215X19.5 SR215X6.5	TSNG220 TSNG220 TSNG320 TSNG320	VR220 VR220 VR320 VR320	LO220 LO220 LO320 LO320	TA220 TA220 TA320 TA320	EC520-617 EC520-617 EC524-620 EC524-620
110	125	SNT 522-619 SNT 522-619	22222 23222	SR200X13.5 SR200X5.1	TSNG222 TSNG222	VR222 VR222	LO222 LO222	TA222 TA222	EC522-619 EC522-619
120	135	SNT 524-620 SNT 524-620	22224 23224	SR215X14 SR215X5	TSNG224 TSNG224	VR224 VR224	LO224 LO224	TA224 TA224	EC 524-620 EC 524-620
130	145	SNT 526 SNT 526	22226 23226	SR230X13 SR230X5	TSNG226 TSNG226	VR226 VR226	LO226 LO226	TA226 TA226	EC526 EC526
140	155	SNT 528 SNT 528	22228 23228	SR250X15 SR250X5	TSNG228 TSNG228	VR228 VR228	LO228 LO228	TA228 TA228	EC528 EC528
150	165	SNT 530 SNT 530	22230 23230	SR270X16.5 SR270X5	TSNG230 TSNG230	VR230 VR230	LO230 LO230	TA230 TA230	EC530 EC530
160	175	SNT 532 SNT 532	22232 23232	SR290X17 SR290X5	TSNG232 TSNG232	VR232 VR232	LO232 LO232	TA232 TA232	EC532 EC532

[1]Locating rings = minimum two required for fixed position, sold one piece per box.
[2]Double-lip and V-ring seals sold two pieces per box. Consult your Timken engineer for double-lip seal availability.
[3]Labyrinth, taconite seal and end cover, sold one piece per box.

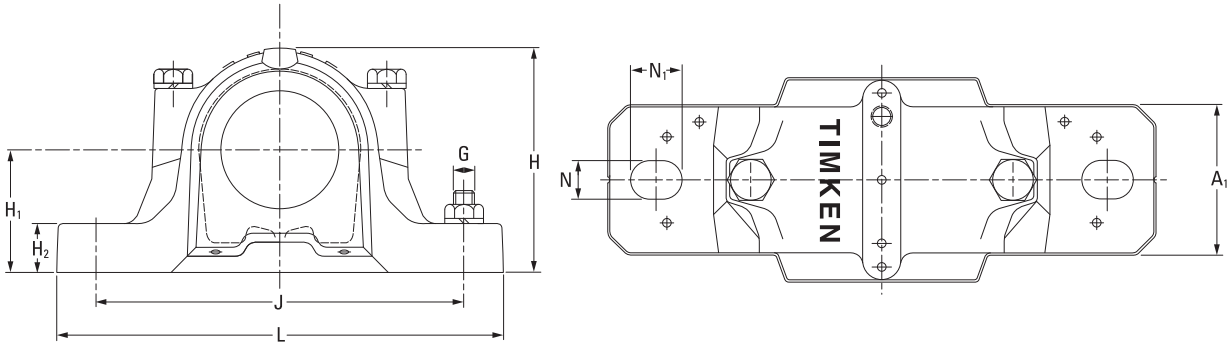

Housing Dimensions													2 Bolts Req'd	Housing Mass
A	A_1	A_2	A_3	H	H_1	H_2	J min	J	J max	L	N	N_1	G	
mm	mm	mm	mm	mm	mm	mm	mm	mm	mm	mm	mm	mm	mm	kg
115	80	133	195	155	80	30	222	230	238	280	18	24	16	6.9
140	100	158	225	194	100	35	285	290	295	345	22	28	20	13.1
140	100	158	225	194	100	35	285	290	295	345	22	28	20	13.1
120	90	138	200	177	95	32	252	260	268	315	22	28	20	9.7
145	100	163	220	212	112	35	285	290	295	345	22	28	20	14.0
145	100	163	220	212	112	35	285	290	295	345	22	28	20	14.0
125	90	143	205	183	95	32	252	260	268	320	22	28	20	10.4
160	110	178	235	218	112	40	314	320	326	380	26	32	24	17.6
160	110	178	235	218	112	40	314	320	326	380	26	32	24	17.6
140	100	158	220	194	100	35	285	290	295	345	22	28	20	13.1
140	100	158	220	194	100	35	285	290	295	345	22	28	20	13.1
175	120	191	250	242	125	45	344	350	356	410	26	32	24	22.3
175	120	191	250	242	125	45	344	350	356	410	26	32	24	22.3
160	110	178	235	218	112	40	314	320	326	380	26	32	24	17.6
160	110	178	235	218	112	40	314	320	326	380	26	32	24	17.6
185	120	199	260	271	140	45	344	350	356	410	26	32	24	26.5
185	120	199	260	271	140	45	344	350	356	410	26	32	24	26.5
175	120	191	250	242	125	45	344	350	356	410	26	32	24	22.3
175	120	191	250	242	125	45	344	350	356	410	26	32	24	22.3
185	120	199	260	271	140	45	344	350	356	410	26	32	24	26.5
185	120	199	260	271	140	45	344	350	356	410	26	32	24	26.5
190	130	208	265	290	150	50	373	380	387	445	28	35	24	34.0
190	130	208	265	290	150	50	373	380	387	445	28	35	24	34.0
205	150	223	285	302	150	50	413	420	427	500	35	42	30	39.0
205	150	223	285	302	150	50	413	420	427	500	35	42	30	39.0
220	160	241	295	323	160	60	443	450	457	530	35	42	30	48.0
220	160	241	295	323	160	60	443	450	457	530	35	42	30	48.0
235	160	254	315	344	170	60	463	470	477	550	35	42	30	54.5
235	160	254	315	344	170	60	463	470	477	550	35	42	30	54.5

FOUR-BOLT FSNT HOUSINGS FOR CYLINDRICAL BORE BEARINGS

- The basic numbers for ordering plummer block housings and components are listed in the table below.
- Each housing includes the housing cap, base and cap bolts.
- Assemblies shown are furnished in cast iron. If cast steel is desired, add the letter S to the alpha prefix (e.g., FSNTS 518). If ductile iron is desired, add the letter D to the alpha prefix (e.g., FSNTD 505).
- Seal sleeve for d_a shaft to be supplied by customer and should have same O.D. as d_b.

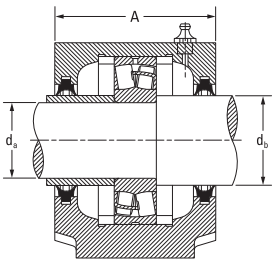

Double-Lip Seal

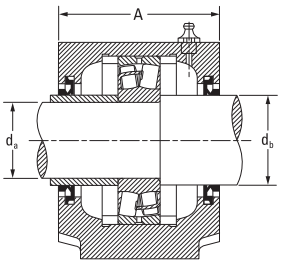

V-Ring Seal

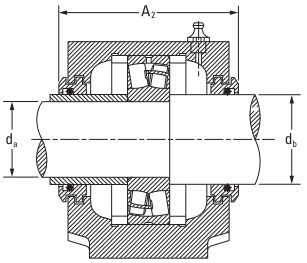

Labyrinth Seal

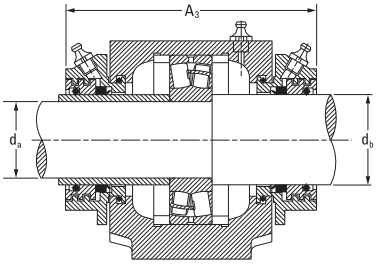

Taconite Seal

Shaft Dia. d_a mm	Shaft Dia. d_b mm	Housing	Bearing	Locating Rings[1] O.D. x Width	Double-Lip Seal[2]	V-Ring Seal[2]	Labyrinth Seal[3]	Taconite Seal[3]	End Cover[3]
35	45	FSNT 208-307	21307	SR80X9	TSNG307	VR307	LO307	TA307	EC510-608
40	50	FSNT 208-307 FSNT 510-608 FSNT 510-608	22208 21308 22308	SR80X8 SR90X9 SR90X4	TSNG208 TSNG308 TSNG308	VR208 VR308 VR308	LO208 LO308 LO308	TA208 TA308 TA308	EC510-608 EC510-608 EC510-608
45	55	FSNT 209 FSNT 511-609 FSNT 511-609	22209 21309 22309	SR85X3.5 SR100X9.5 SR100X4	TSNG209 TSNG309 TSNG309	VR209 VR309 VR309	LO209 LO309 LO309	TA209 TA309 TA309	EC511-609 EC511-609 EC511-609
50	60	FSNT 210 FSNT 512-610 FSNT 512-610	22210 21310 22310	SR90X9 SR110X10.5 SR110X 4	TSNG210 TSNG310 TSNG310	VR210 VR310 VR310	LO210 LO310 LO310	TA210 TA310 TA310	EC512-610 EC512-610 EC512-610
55	65	FSNT 211 FSNT 513-611 FSNT 513-611	22211 21311 22311	SR100X9.5 SR120X11 SR120X4	TSNG211 TSNG311 TSNG311	VR211 VR311 VR311	LO211 LO311 LO311	TA211 TA311 TA311	EC513-611 EC513-611 EC513-611
60	70	FSNT 212 FSNT 515-612 FSNT 515-612	22212 21312 22312	SR110X10 SR130X12.5 SR130X5	TSNG212 TSNG312 TSNG312	VR212 VR312 VR312	LO212 LO312 LO312	TA212 TA312 TA312	EC515-612 EC515-612 EC515-612
65	75	FSNT 213 FSNT 516-613 FSNT 516-613	22213 21313 22313	SR120X10 SR140X12.5 SR140X5	TSNG213 TSNG313 TSNG313	VR213 VR313 VR313	LO213 LO313 LO313	TA213 TA313 TA313	EC516-613 EC516-613 EC516-613
70	80	FSNT 517 FSNT 517	22314 21314	SR150X5 SR150X13	TSNG314 TSNG314	VR314 VR314	LO314 LO314	TA314 TA314	EC517 EC517
75	85	FSNT 215 FSNT 518-615 FSNT 518-615	22215 21315 22315	SR130X12.5 SR160X14 SR160X5	TSNG215 TSNG315 TSNG315	VR215 VR315 VR315	LO215 LO315 LO315	TA215 TA315 TA315	EC518-615 EC518-615 EC518-615
80	90	FSNT 216 FSNT 519-616 FSNT 519-616	22216 21316 22316	SR140X10 SR170X14.5 SR170X5	TSNG216 TSNG316 TSNG316	VR216 VR316 VR316	LO216 LO316 LO316	TA216 TA316 TA316	EC216 EC519-616 EC519-616

[1]Locating rings = minimum two required for fixed position, sold one piece per box.
[2]Double-lip and V-ring seal sold two pieces per box. Consult with your Timken engineer for double-lip seal availability.
[3]Labyrinth, taconite seal and end cover, sold one piece per box.

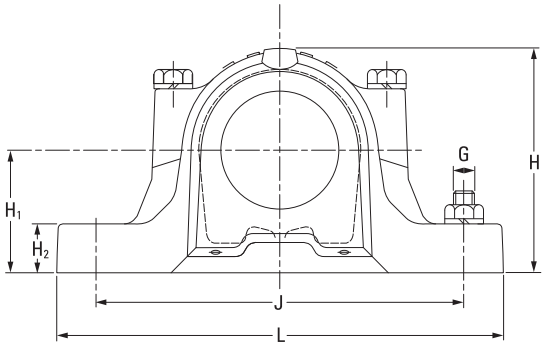

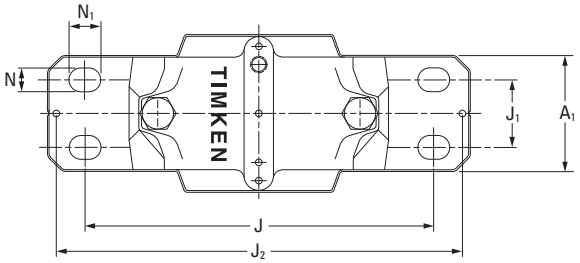

Housing Dimensions													4 Bolts Req'd	Housing Mass
A	A_1	A_2	A_3	H	H_1	H_2	J	J_1	J_2	L	N	N_1	G	
mm	mm	mm	mm	mm	mm	mm	mm	mm		mm	mm	mm	mm	kg
85	60	99	160	108	60	25	160	34	–	205	11	–	12	2.9
85	60	99	160	108	60	25	160	34	–	205	11	–	12	2.9
90	60	102	150	113	60	25	160	34	–	205	–	11	12	3.2
90	60	102	150	113	60	25	160	34	–	205	–	11	12	3.2
85	60	97	160	109	60	25	160	34	–	205	11	–	12	2.9
95	70	107	155	128	70	28	210	35	–	255	15	20	16	4.5
95	70	107	155	128	70	28	210	35	–	255	15	20	16	4.5
90	60	102	165	113	60	25	160	34	–	205	11	–	12	3.2
105	70	117	165	134	70	30	210	35	–	255	15	20	16	5.3
105	70	117	165	134	70	30	210	35	–	255	15	20	16	5.3
95	70	107	170	128	70	28	200	40	–	255	14	–	16	4.5
110	80	122	170	150	80	30	230	40	–	275	15	20	16	6.6
110	80	122	170	150	80	30	230	40	–	275	15	20	16	6.6
105	70	117	180	134	70	30	200	40	–	255	14	–	16	5.2
115	80	127	175	156	80	30	230	40	–	280	15	20	16	6.9
115	80	127	175	156	80	30	230	40	–	280	15	20	16	6.9
110	80	128	190	149	80	30	220	48	–	275	14	–	16	6.6
120	90	138	180	177	95	32	260	50	–	315	18	24	20	9.7
120	90	138	180	177	95	32	260	50	–	315	18	24	20	9.7
125	90	143	210	183	95	32	260	50	–	320	18	24	20	10.4
125	90	143	210	183	95	32	260	50	–	320	18	24	20	10.4
115	80	133	195	155	80	30	220	48	–	280	14	–	16	6.9
140	100	158	225	194	100	35	290	50	–	345	18	24	20	13.1
140	100	158	225	194	100	35	290	50	–	345	18	24	20	13.1
120	90	138	200	177	95	32	252	52	–	315	18	–	20	9.7
145	100	163	220	212	112	35	290	50	–	345	18	24	20	14.0
145	100	163	220	212	112	35	290	50	–	345	18	24	20	14.0

Continued on next page.

FOUR-BOLT FSNT HOUSINGS FOR CYLINDRICAL BORE BEARINGS – *continued*

- The basic numbers for ordering plummer block housings and components are listed in the table below.
- Each housing includes the housing cap, base and cap bolts.
- Assemblies shown are furnished in cast iron. If cast steel is desired, add the letter S to the alpha prefix (e.g., FSNTS 518). If ductile iron is desired, add the letter D to the alpha prefix (e.g., FSNTD 505).
- Seal sleeve for d_a shaft to be supplied by customer and should have same O.D. as d_b.

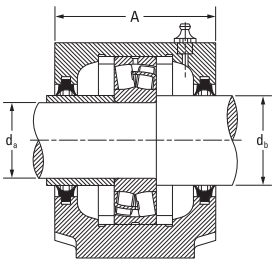

Double-Lip Seal

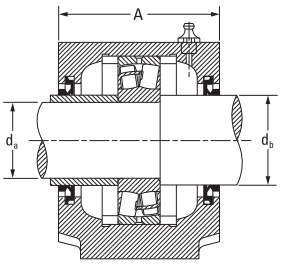

V-Ring Seal

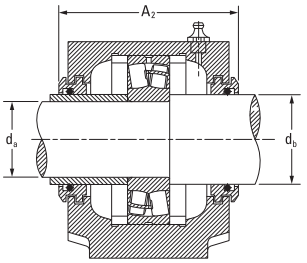

Labyrinth Seal

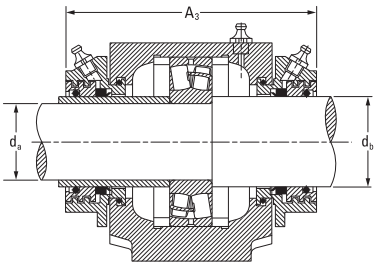

Taconite Seal

Continued from previous page.

Shaft Dia. d_a	Shaft Dia. d_b	Housing	Bearing	Locating Rings[1] O.D. x Width	Double-Lip Seal[2]	V-Ring Seal[2]	Labyrinth Seal[3]	Taconite Seal[3]	End Cover[3]
mm	mm								
85	95	FSNT 217 FSNT 520-617 FSNT 520-617	22217 21317 22317	SR150X12.5 SR180X14.5 SR180X5	TSNG217 TSNG317 TSNG317	VR217 VR317 VR317	LO217 LO317 LO317	TA217 TA317 TA317	EC217 EC520-617 EC520-617
90	100	FSNT 218 FSNT 218	22218 23218	SR160X12.5 SR160X6.25	TSNG218 TSNG218	VR218 VR218	LO218 LO218	TA218 TA218	EC218 EC218
95	110	FSNT 522-619 FSNT 522-619	21319 22319	SR200X17.5 SR200X6.5	TSNG319 TSNG319	VR219 VR219	LO319 LO319	TA319 TA319	EC522-619 EC522-619
100	115	FSNT 520-617 FSNT 520-617 FSNT 524-620 FSNT 524-620	22220 23220 21320 22320	SR180X12 SR180X4.85 SR215X19.5 SR215X6.5	TSNG220 TSNG220 TSNG320 TSNG320	VR220 VR220 VR320 VR320	LO220 LO220 LO320 LO320	TA220 TA220 TA320 TA320	EC520-617 EC520-617 EC524-620 EC524-620
110	125	FSNT 522-619 FSNT 522-619	22222 23222	SR200X13.5 SR200X5.1	TSNG222 TSNG222	VR222 VR222	LO222 LO222	TA222 TA222	EC522-619 EC522-619
120	135	FSNT 524-620 FSNT 524-620	22224 23224	SR215X14 SR215X5	TSNG224 TSNG224	VR224 VR224	LO224 LO224	TA224 TA224	EC 524-620 EC 524-620
130	145	FSNT 526 FSNT 526	22226 23226	SR230X13 SR230X5	TSNG226 TSNG226	VR226 VR226	LO226 LO226	TA226 TA226	EC526 EC526
140	155	FSNT 528 FSNT 528	22228 23228	SR250X15 SR250X5	TSNG228 TSNG228	VR228 VR228	LO228 LO228	TA228 TA228	EC528 EC528
150	165	FSNT 530 FSNT 530	22230 23230	SR270X16.5 SR270X5	TSNG230 TSNG230	VR230 VR230	LO230 LO230	TA230 TA230	EC530 EC530
160	175	FSNT 532 FSNT 532	22232 23232	SR290X17 SR290X5	TSNG232 TSNG232	VR232 VR232	LO232 LO232	TA232 TA232	EC532 EC532

[1]Locating rings = minimum two required for fixed position, sold one piece per box.
[2]Double-lip and V-ring seal sold two pieces per box. Consult with your Timken engineer for double-lip seal availability.
[3]Labyrinth, taconite seal and end cover, sold one piece per box.

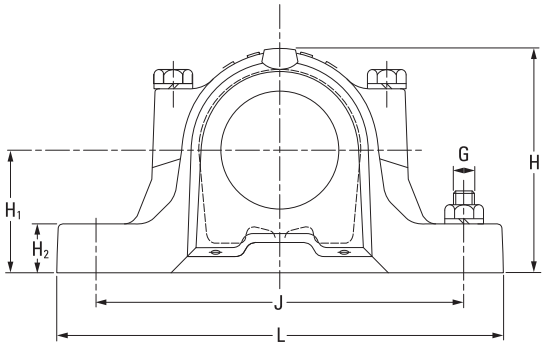

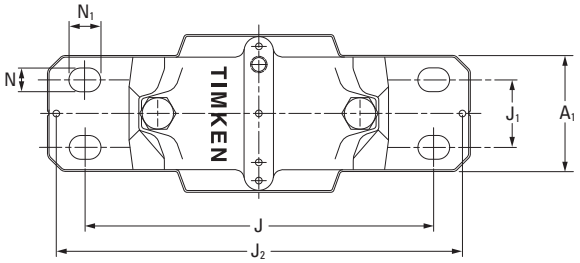

Housing Dimensions													4 Bolts Req'd	Housing Mass
A	A_1	A_2	A_3	H	H_1	H_2	J	J_1	J_2	L	N	N_1	G	
mm	mm	mm	mm	mm	mm	mm	mm	mm		mm	mm	mm	mm	kg
125	90	143	205	183	95	32	252	52	–	320	18	–	20	10.4
160	110	178	235	218	112	40	320	60	–	380	18	24	24	17.6
160	110	178	235	218	112	40	320	60	–	380	18	24	24	17.6
140	100	158	220	194	100	35	280	58	–	345	18	–	20	13.1
140	100	158	220	194	100	35	280	58	–	345	18	–	20	13.1
175	120	191	250	242	125	45	350	70	–	410	18	24	24	22.3
175	120	191	250	242	125	45	350	70	–	410	18	24	24	22.3
160	110	178	235	218	112	40	320	60	–	380	18	24	24	17.6
160	110	178	235	218	112	40	320	60	–	380	18	24	24	17.6
185	120	199	260	271	140	45	350	70	–	410	18	24	24	26.5
185	120	199	260	271	140	45	350	70	–	410	18	24	24	26.5
175	120	191	250	242	125	45	350	70	–	410	18	24	24	22.3
175	120	191	250	242	125	45	350	70	–	410	18	24	24	22.3
185	120	199	260	271	140	45	350	70	–	410	18	24	24	26.5
185	120	199	260	271	140	45	350	70	–	410	18	24	24	26.5
190	130	208	265	290	150	50	380	70	–	445	22	28	24	34.0
190	130	208	265	290	150	50	380	70	–	445	22	28	24	34.0
205	150	223	285	302	150	50	420	80	–	500	26	32	30	39.0
205	150	223	285	302	150	50	420	80	–	500	26	32	30	39.0
220	160	241	295	323	160	60	450	90	–	530	26	32	30	48.0
220	160	241	295	323	160	60	450	90	–	530	26	32	30	48.0
235	160	254	315	344	170	60	470	90	–	550	26	32	30	54.5
235	160	254	315	344	170	60	470	90	–	550	26	32	30	54.5

LARGE PLUMMER BLOCK HOUSINGS – 3000 AND 3100 SERIES

- The basic numbers for ordering plummer block housings and components are listed in the table below.
- Each housing includes the housing cap, base and cap bolts.
- Housings shown are furnished in cast iron. If cast steel is desired, add the letter S to the alpha prefix (e.g., SNTS 518). If ductile iron is desired, add the letter D to the alpha prefix (e.g., SNTD 505).
- Housings with the F suffix are manufactured for fixed bearings. Those with the L suffix are float position housings.

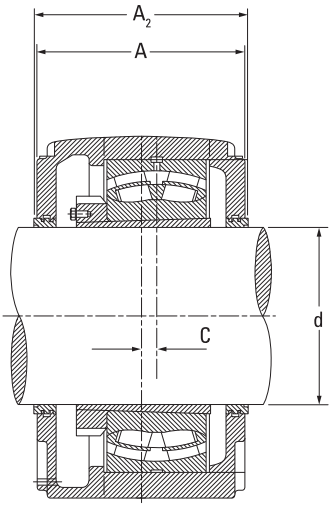

Labyrinth Seal

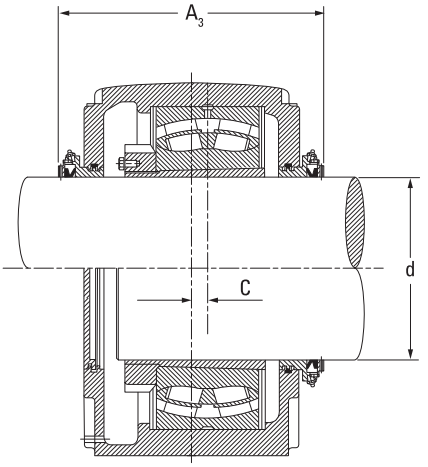

Taconite Seal

Shaft Dia. d	Housing	Bearing	Locating Rings[1] O.D. x Width	Quantity (Typically required for this bearing/housing configuration)	Adapter Sleeve[2]	Locknut[3]	Lockwasher[3]	Labyrinth Seal[3]	Taconite Seal[3]	End Cover[3]
mm										
150	SNT 3134	23134K	SR280X10	2	H3134	KM34	MB34	LO34	TA34	EC34
160	SNT 3036 SNT 3136	23036K 23136K	SR280X17 SR300X10	2 2	H3036 H3136	KM36 KM36	MB36 MB36	LO36 LO36	TA36 TA36	EC36 EC36
170	SNT 3038 SNT 3138	23038K 23138K	SR290X10 SR320X10	4 2	H3038 H3138	KML38 KM38	MBL38 MB38	LO38 LO38	TA38 TA38	EC38 EC38
180	SNT 3040 SNT 3140	23040K 23140K	SR310X10 SR340X10	4 2	H3040 H3140	KM40 KM40	MB40 MB40	LO40 LO40	TA40 TA40	EC40 EC40
200	SNT 3044 SNT 3144	23044K 23144K	SR340X10 SR370X10	4 2	OH3044H OH3144H	HM3044 HM44T	MS3044 MB44	LO44 LO44	TA44 TA44	EC44 EC44
220	SNT 3048 SNT 3148	23048K 23148K	SR360X12 SR400X10	4 2	OH3048H OH3148H	HM3048 HM48T	MS3048 MB48	LO48 LO48	TA48 TA48	EC48 EC48
240	SNT 3052 SNT 3152	23052K 23152K	SR400X22 SR440X10	2 2	OH3052H OH3152H	HM3052 HM52T	MS3052 MB52	LO52 LO52	TA52 TA52	EC52 EC52
260	SNT 3056 SNT 3156	23056K 23156K	SR420X10 SR460X10	6 2	OH3056H OH3156H	HM3056 HM56T	MS3056 MB56	LO56 LO56	TA56 TA56	EC56 EC56
280	SNT 3060 SNT 3160	23060K 23160K	SR460X25 SR500X10	2 2	OH3060H OH3160H	HM3060 HM3160	MS3060 MS3160	LO60 LO60	TA60 TA60	EC60 EC60
300	SNT 3064 SNT 3164	23064K 23164K	SR480X10 SR540X10	6 2	OH3064H OH3164H	HM3064 HM3164	MS3064 MS3164	LO64 LO64	TA64 TA64	EC64 EC64
320	SNT 3068 SNT 3168F SNT 3168L	23068K 23168K 23168K	SR520X16 FIXED HOUSING FLOAT HOUSING	4 – –	OH3068H OH3168H OH3168H	HM3068 HM3168 HM3168	MS3068 MS3168 MS3168	LO68 LO68 LO68	TA68 TA68 TA68	EC68 EC68 EC68
340	SNT 3072 SNT 3172F SNT 3172L	23172K 23172K 23172K	SR540X16 FIXED HOUSING FLOAT HOUSING	4 – –	OH3072H OH3172H OH3172H	HM3072 HM3172 HM3172	MS3072 MS3172 MS3172	LO72 LO72 LO72	TA72 TA72 TA72	EC72 EC72 EC72

[1]Locating rings = minimum two required for fixed position, sold one piece per box.
[2]Adapter sleeve assembly includes one sleeve, one locknut and one lockwasher.
[3]Labyrinth, taconite seal, end cover, locknut, lockwasher, sold one piece per box.

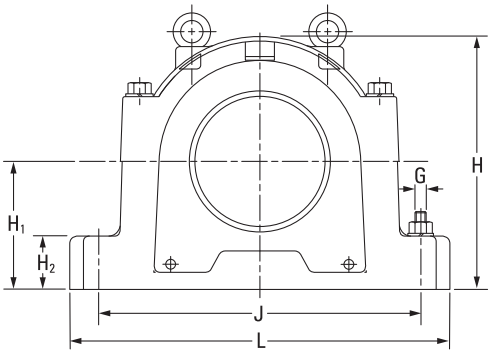

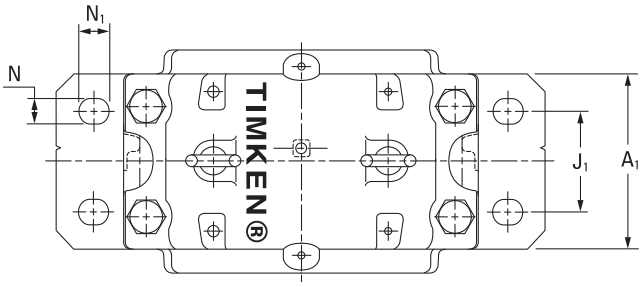

Housing Dimensions													4 Bolts Req'd	Housing Mass
A	A_1	A_2	A_3	C	H	H_1	H_2	J	J_1	L	N	N_1	G	
mm	mm	mm	mm	mm	mm	mm	mm	mm	mm	mm	mm	mm	mm	kg
230	180	240	300	14	333	170	70	430	100	510	28	34	24	75
230 240	180 190	240 250	310 315	14 15	333 353	170 180	70 75	430 450	100 110	510 530	28 28	34 34	24 24	72 92
240 260	190 210	250 270	315 335	15 10	353 375	180 190	75 80	450 480	110 120	530 560	28 28	34 34	24 24	81 112
260 280	210 230	270 290	335 355	10 10	375 411	190 210	80 85	480 510	120 130	560 610	28 35	34 42	24 30	110 130
280 290	230 240	290 300	355 365	10 12	411 434	210 220	85 90	510 540	130 140	610 640	35 35	42 42	30 30	118 140
290 310	240 260	300 315	385 400	12 12	434 474	220 240	90 95	540 600	140 150	640 700	35 35	42 42	30 30	138 193
310 320	260 280	315 330	400 415	12 13	474 516	240 260	95 100	600 650	150 160	700 770	35 42	42 50	30 36	189 235
320 320	280 280	330 330	415 415	13 16	516 551	260 280	100 105	650 670	160 160	770 790	42 42	50 50	36 36	254 260
320 350	280 310	330 360	415 445	16 22	551 591	280 300	105 110	670 710	160 190	790 830	42 42	50 50	36 36	260 310
350 370	310 330	360 380	445 462	22 23	591 631	300 320	110 115	710 750	190 200	830 880	42 42	50 50	36 36	300 346
370 400 400	330 360 360	380 410 410	465 492 492	23 24 24	631 675 675	320 340 340	115 120 120	750 810 810	200 220 220	880 950 950	42 42 42	50 50 50	36 36 36	339 432.5 429.5
370 400 400	330 360 360	380 410 410	465 492 492	23 30 30	631 695 695	320 350 350	115 120 120	750 840 840	200 220 220	950 1000 1000	42 42 42	50 50 50	36 36 36	342 458 454

Continued on next page.

LARGE PLUMMER BLOCK HOUSINGS – 3000 AND 3100 SERIES – *continued*

- The basic numbers for ordering plummer block housings and components are listed in the table below.
- Each housing includes the housing cap, base and cap bolts.
- Housings shown are furnished in cast iron. If cast steel is desired, add the letter S to the alpha prefix (e.g., SNTS 518). If ductile iron is desired, add the letter D to the alpha prefix (e.g., SNTD 505).
- Housings with the F suffix are manufactured for fixed bearings. Those with the L suffix are float position housings.

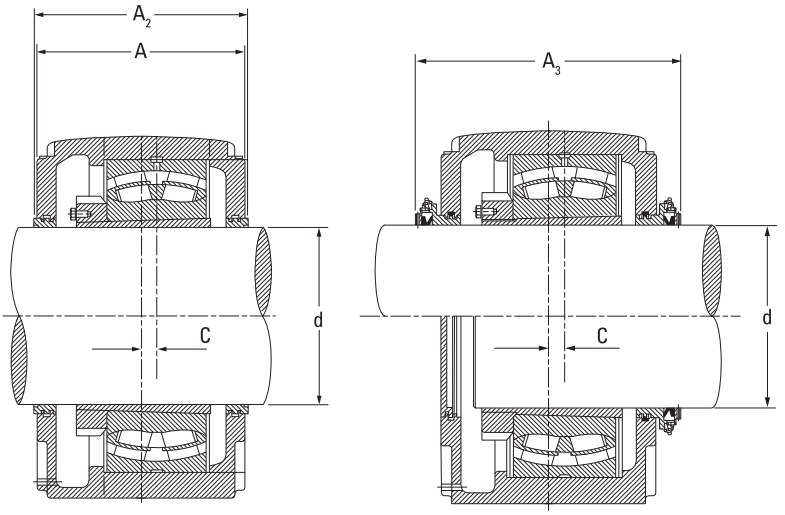

Continued from previous page.

Shaft Dia. d	Housing	Bearing	Locating Rings[1] O.D. x Width	Quantity (Typically required for this bearing/housing configuration)	Adapter Sleeve[2]	Locknut[3]	Lockwasher[3]	Labyrinth Seal[3]	Taconite Seal[3]	End Cover[3]
mm										
360	SNT 3076F SNT 3076L SNT 3176F SNT 3176L	23076K 23076K 23176K 23176K	FIXED HOUSING FLOAT HOUSING FIXED HOUSING FLOAT HOUSING	–	OH3076H OH3076H OH3176H OH3176H	HM3076 HM3076 HM3176 HM3176	MS3076 MS3076 MS3176 MS3176	LO76 LO76 LO76 LO76	TA76 TA76 TA76 TA76	EC76 EC76 EC76 EC76
380	SNT 3080F SNT 3080L SNT 3180F SNT 3180L	23080K 23080K 23180K 23180K	FIXED HOUSING FLOAT HOUSING FIXED HOUSING FLOAT HOUSING	–	OH3080H OH3080H OH3180H OH3180H	HM3080 HM3080 HM3180 HM3180	MS3080 MS3080 MS3180 MS3180	LO80 LO80 LO80 LO80	TA80 TA80 TA80 TA80	EC80 EC80 EC80 EC80
400	SNT 3084F SNT 3084L	23084K 23084K	FIXED HOUSING FLOAT HOUSING	–	OH3084H OH3084H	HM3084 HM3084	MS3084 MS3084	LO84 LO84	TA84 TA84	EC84 EC84

[1]Locating rings = minimum two required for fixed position, sold one piece per box.
[2]Adapter sleeve assembly includes one sleeve, one locknut and one lockwasher.
[3]Labyrinth, taconite seal, end cover, locknut, lockwasher, sold one piece per box.

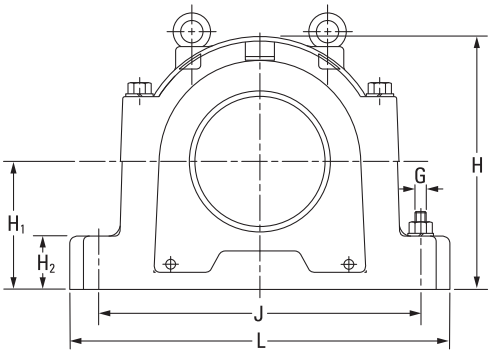

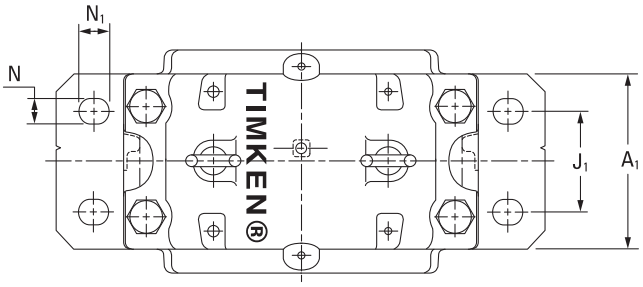

Housing Dimensions													4 Bolts Req'd	Housing Mass
A	A_1	A_2	A_3	C	H	H_1	H_2	J	J_1	L	N	N_1	G	
mm	mm	mm	mm	mm	mm	mm	mm	mm	mm	mm	mm	mm	mm	kg
400	360	410	495	24	675	340	120	810	220	1000	42	50	36	430
400	360	410	495	24	675	340	120	810	220	1000	42	50	36	427
400	360	410	492	30	715	360	120	870	220	1040	42	50	36	487
400	360	410	492	30	715	360	120	870	220	1040	42	50	36	484
400	360	410	495	30	695	350	120	840	220	1040	42	50	36	454
400	360	410	495	30	695	350	120	840	220	1040	42	50	36	450
430	390	440	522	30	775	380	125	950	240	1120	48	60	42	595
430	390	440	522	30	775	380	125	950	240	1120	48	60	42	595
400	360	410	495	30	715	360	120	870	220	1120	42	50	36	483
400	360	410	495	30	715	360	120	870	220	1120	42	50	36	480

METRIC SHAFT DIAMETERS

TABLE 20. SUGGESTED METRIC SHAFT DIAMETERS FOR USE WITH ADAPTER SLEEVES (MM)

Shaft O.D.	Max.	Min.	Shaft O.D.	Max.	Min.
20	20.000	19.925	190	190.000	189.875
25	25.000	24.925	200	200.000	199.875
30	30.000	29.925	210	210.000	209.850
35	35.000	34.925	220	220.000	219.850
40	40.000	39.925	230	230.000	229.850
45	45.000	44.925	240	240.000	239.850
50	50.000	49.925	250	250.000	249.850
55	55.000	54.900	260	260.000	259.850
60	60.000	59.900	270	270.000	269.825
65	65.000	64.900	280	280.000	279.825
70	70.000	69.900	290	290.000	289.825
75	75.000	74.900	300	300.000	299.825
80	80.000	79.900	310	310.000	309.825
85	85.000	84.900	320	320.000	319.800
90	90.000	89.900	330	330.000	329.800
95	95.000	94.900	340	340.000	339.800
100	100.000	99.900	350	350.000	349.800
105	105.000	104.875	360	360.000	359.800
110	110.000	109.875	370	370.000	369.800
115	115.000	114.875	380	380.000	379.800
120	120.000	119.875	390	390.000	389.800
125	125.000	124.875	400	400.000	399.800
130	130.000	129.875	410	410.000	409.800
135	135.000	134.875	420	420.000	419.800
140	140.000	139.875	430	430.000	429.800
145	145.000	144.875	440	440.000	439.800
150	150.000	149.875	450	450.000	449.800
160	160.000	159.875	460	460.000	459.800
170	170.000	169.875	470	470.000	469.800
180	180.000	179.875	480	480.000	479.800

SPHERICAL ROLLER BEARING PRODUCT DATA TABLES

Timken® spherical roller bearings feature all of the characteristics that have made Timken renowned – superior design, reliable performance and comprehensive technical support. Spherical roller bearings are designed to manage high radial loads and perform consistently, even when misalignment, marginal lubrication, contamination, extreme speeds and critical application stresses are present.

SPHERICAL ROLLER BEARING NOMENCLATURE

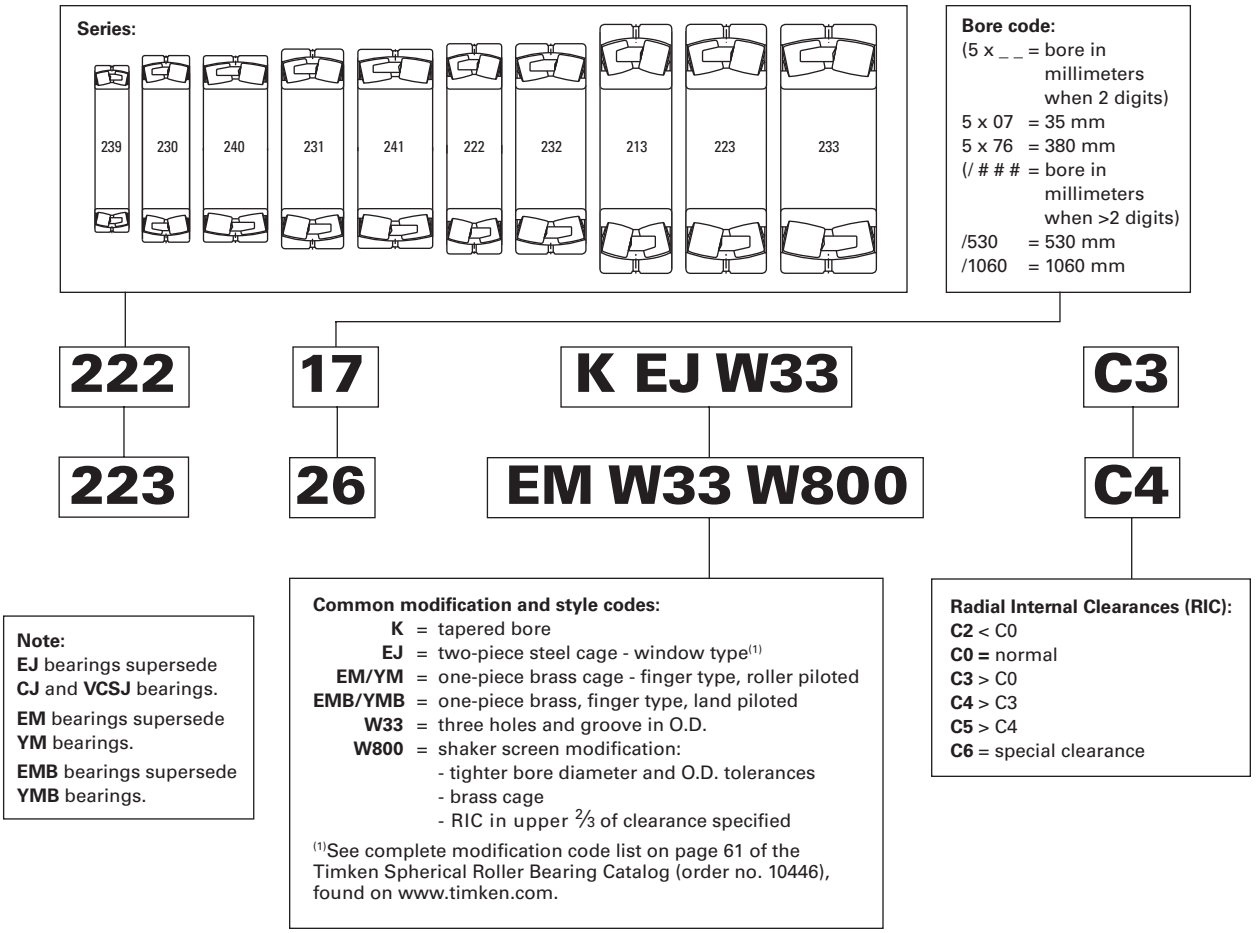

Fig. 35. Timken® spherical roller bearing nomenclature.

213 SERIES (200, 300, 500, 600 SERIES SNT, FSNT)

- Bearings are available with a tapered bore for adapter-type mounting. To order, add the suffix K to bearing number (e.g., 23120K).
- Consult your Timken engineer and www.timken.com for up-to-date information about the availability of the bearings you have selected.
- This section lists spherical roller bearings pertinent to Timken SNT plummer blocks. For a wider selection, consult www.timken.com or the Timken® Spherical Roller Bearing catalog (order no. 10446).

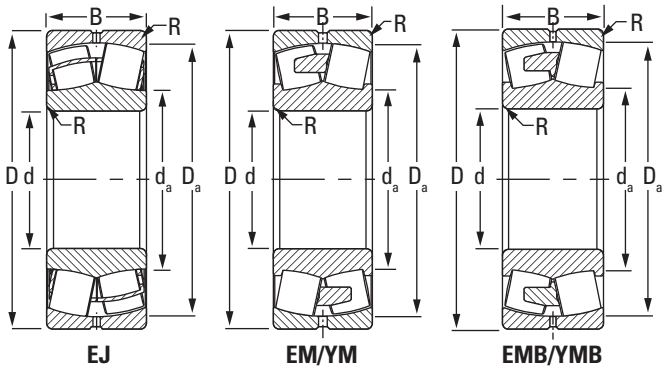

Bearing Part No.	Bearing Dimensions			Load Ratings		Cage Type	Mounting Data			Equivalent Radial Load Factors(2)				Geometry Factor(3)	Thermal Speed Ratings(4)		Wt.
											Dynamic		Static				
							Fillet(1) (Max.)	Backing Dia.			$\frac{F_a}{F_r} \le e$	$\frac{F_a}{F_r} > e$	In All Cases				
								Shaft	Housing		X = 1	X = 0.67			Oil	Grease	
	Bore d	O.D. D	Width B	Dynamic C	Static C_o		R	d_a	D_a	e	Y	Y	Y_0	C_g			
	mm in.	mm in.	mm in.	kN lbf.	kN lbf.		mm in.	mm in.	mm in.						RPM	RPM	kg lbs.
21305	**25** 0.9843	**62** 2.4409	**17** 0.6693	**55.5** 12500	**44.3** 9970	EJ	**1** 0.04	**35** 1.4	**55** 2.1	0.27	2.48	3.7	2.43	0.037	10000	8100	**0.3** 0.7
21306	**30** 1.1811	**72** 2.8346	**19** 0.748	**70.3** 15800	**56.5** 12700	EJ	**1** 0.04	**41** 1.6	**64** 2.5	0.26	2.6	3.87	2.54	0.041	8900	7200	**0.4** 0.9
21307	**35** 1.378	**80** 3.1496	**21** 0.8268	**90.2** 20300	**77.8** 17500	EJ	**1.5** 0.06	**47** 1.9	**71** 2.8	0.26	2.56	3.81	2.5	0.044	7900	6400	**0.5** 1.1
21308	**40** 1.5748	**90** 3.5433	**23** 0.9055	**113** 25400	**102** 22900	EJ	**1.5** 0.06	**54** 2.1	**80** 3.2	0.26	2.64	3.93	2.58	0.048	7100	5800	**0.7** 1.5
21309	**45** 1.7717	**100** 3.937	**25** 0.9843	**138** 31000	**125** 28200	EJ	**1.5** 0.06	**60** 2.4	**90** 3.5	0.25	2.75	4.09	2.69	0.052	6500	5300	**1.0** 2.2
21310	**50** 1.9685	**110** 4.3307	**27** 1.063	**163** 36700	**151** 33800	EJ	**2** 0.08	**67** 2.6	**99** 3.9	0.24	2.83	4.21	2.76	0.055	5900	4900	**1.2** 2.6
21311	**55** 2.1654	**120** 4.7244	**29** 1.1417	**188** 42400	**176** 39500	EJ	**2** 0.08	**73** 2.9	**108** 4.2	0.24	2.81	4.18	2.75	0.058	5500	4500	**1.6** 3.5
21312	**60** 2.3622	**130** 5.1181	**31** 1.2205	**225** 50500	**219** 49200	EJ	**2** 0.08	**80** 3.2	**116** 4.6	0.23	2.91	4.33	2.84	0.062	5100	4200	**2.0** 4.4
21313	**65** 2.5591	**140** 5.5118	**33** 1.2992	**259** 58200	**254** 57100	EJ	**2** 0.08	**86** 3.4	**126** 5	0.23	2.94	4.37	2.87	0.065	4800	3900	**2.4** 5.3
21314	**70** 2.7559	**150** 5.9055	**35** 1.378	**292** 65600	**289** 65000	EJ	**2** 0.08	**93** 3.7	**135** 5.3	0.23	2.97	4.42	2.9	0.068	4500	3700	**3.0** 6.6
21315	**75** 2.9528	**160** 6.2992	**37** 1.4567	**322** 72400	**321** 72200	EJ	**2** 0.08	**99** 3.9	**144** 5.7	0.23	2.98	4.43	2.91	0.071	4300	3600	**3.5** 7.7
21316	**80** 3.1496	**170** 6.6929	**39** 1.5354	**363** 81700	**363** 81700	EJ	**2** 0.08	**105** 4.1	**153** 6	0.22	3.01	4.47	2.94	0.073	4100	3400	**4.2** 9.2
21317	**85** 3.3465	**180** 7.0866	**41** 1.6142	**403** 90600	**407** 91500	EJ	**2.5** 0.1	**112** 4.4	**162** 6.4	0.22	3.04	4.53	2.97	0.076	3900	3200	**4.9** 10.8
21318	**90** 3.5433	**190** 7.4803	**43** 1.6929	**442** 99400	**449** 101000	EJ	**2.5** 0.1	**118** 4.7	**171** 6.7	0.22	3.05	4.55	2.99	0.079	3700	3100	**5.8** 12.8

(1)Maximum shaft or housing fillet radius that bearing corners will clear.
(2)These factors apply for both inch and metric calculations. See engineering section for instructions on use.
(3)Geometry constant for Lubrication Life Factor a_{31} is found in the Bearing Ratings section of the Engineering Manual (order no. 10424).
(4)See thermal speed ratings in the Engineering Manual (order no. 10424).
NOTE: Where EJ and EM/EMB have different load ratings, the more conservative one was taken to use for both assemblies.
NOTE: Tolerance and shaft diameters are shown in tables 2 and 3 on pages 19 and 20 as variances from nominal bearing bore.

222 SERIES (200, 500 SERIES SNT, FSNT)

- Bearings are available with a tapered bore for adapter-type mounting. To order, add the suffix K to bearing number (e.g., 23120K).
- Consult your Timken engineer and www.timken.com for up-to-date information about the availability of the bearings you have selected.
- This section lists spherical roller bearings pertinent to Timken SNT plummer blocks. For a wider selection, consult www.timken.com or the Timken® Spherical Roller Bearing catalog (order no. 10446).

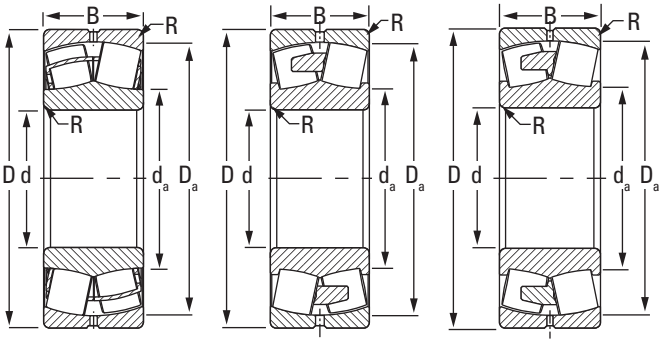

EJ EM/YM EMB/YMB

Bearing Part No.	Bearing Dimensions			Load Ratings		Cage Type	Mounting Data			Equivalent Radial Load Factors(2)				Geometry Factor(3)	Thermal Speed Ratings(4)		Wt.
											Dynamic		Static				
							Fillet(1) (Max.)	Backing Dia.			$\frac{F_a}{F_r} \le e$ X = 1	$\frac{F_a}{F_r} > e$ X = 0.67	In All Cases				
	Bore d	O.D. D	Width B	Dynamic C	Static C_o		R	Shaft d_a	Housing D_a	e	Y	Y	Y_0	C_g	Oil	Grease	
	mm in.	**mm** in.	**mm** in.	**kN** lbf.	**kN** lbf.		**mm** in.	**mm** in.	**mm** in.						RPM	RPM	**kg** lbs.
22205	**25** 0.9843	**52** 2.0472	**18** 0.7087	**50.6** 11400	**43.1** 9690	EJ	**1** 0.04	**30** 1.2	**47** 1.9	0.34	2	2.98	1.96	0.032	12000	9200	**0.2** 0.4
22206	**30** 1.1811	**62** 2.4409	**20** 0.7874	**67.4** 15200	**60.8** 13700	EJ	**1** 0.04	**38** 1.5	**56** 2.2	0.31	2.15	3.2	2.1	0.037	9700	7800	**0.3** 0.7
22207	**35** 1.378	**72** 2.8346	**23** 0.9055	**90.5** 20300	**88** 19700	EJ	**1** 0.04	**45** 1.8	**65** 2.6	0.31	2.21	3.29	2.16	0.041	8600	6900	**0.5** 1.1
22208	**40** 1.5748	**80** 3.1496	**23** 0.9055	**104** 23400	**99.7** 22400	EJ/EM	**1** 0.04	**50** 2	**73** 2.9	0.27	2.47	3.67	2.41	0.044	7500	6000	**0.6** 1.3
22209	**45** 1.7717	**85** 3.3465	**23** 0.9055	**104** 23500	**101** 22800	EJ/EM	**1** 0.04	**55** 2.2	**77** 3	0.26	2.64	3.93	2.58	0.046	6800	5500	**0.6** 1.3
22210	**50** 1.9685	**90** 3.5433	**23** 0.9055	**112** 25200	**112** 25100	EJ/EM	**1** 0.04	**59** 2.3	**82** 3.2	0.24	2.84	4.23	2.78	0.049	6200	5000	**0.6** 1.3
22211	**55** 2.1654	**100** 3.937	**25** 0.9843	**134** 30100	**134** 30100	EJ/EM	**1.5** 0.06	**66** 2.6	**91** 3.6	0.23	2.95	4.4	2.89	0.052	5800	4700	**0.9** 2.0
22212	**60** 2.3622	**110** 4.3307	**28** 1.1024	**163** 36600	**164** 36900	EJ/EM	**1.5** 0.06	**72** 2.8	**100** 4	0.24	2.84	4.23	2.78	0.055	5500	4400	**1.2** 2.6
22213	**65** 2.5591	**120** 4.7244	**31** 1.2205	**198** 44600	**204** 45900	EJ/EM	**1.5** 0.06	**78** 3.1	**109** 4.3	0.24	2.79	4.15	2.73	0.058	5100	4200	**1.6** 3.5
22214	**70** 2.7559	**125** 4.9213	**31** 1.2205	**205** 46000	**219** 49200	EJ/EM	**1.5** 0.06	**84** 3.3	**114** 4.5	0.23	2.9	4.32	2.84	0.063	4800	3900	**1.6** 3.5
22215	**75** 2.9528	**130** 5.1181	**31** 1.2205	**222** 49900	**240** 54100	EJ	**1.5** 0.06	**88** 3.5	**120** 4.7	0.22	3.14	4.67	3.07	0.062	4600	3700	**1.7** 3.7
22216	**80** 3.1496	**140** 5.5118	**33** 1.2992	**254** 57200	**278** 62500	EJ/EM	**2** 0.08	**95** 3.7	**129** 5.1	0.22	3.14	4.67	3.07	0.065	4300	3500	**2.2** 4.8

(1)Maximum shaft or housing fillet radius that bearing corners will clear.
(2)These factors apply for both inch and metric calculations. See Timken Engineering Manual (order no. 10424) for instructions on use.
(3)Geometry constant for Lubrication Life Factor a_{31} is found in the Bearing Ratings section of the Engineering Manual (order no. 10424).
(4)See thermal speed ratings in the Engineering Manual (order no. 10424).
NOTE: Where EJ and EM/EMB have different load ratings, the more conservative one was taken to use for both assemblies.
NOTE: Tolerance and shaft diameters are shown in tables 2 and 3 on pages 19 and 20 as variances from nominal bearing bore.

Continued on next page.

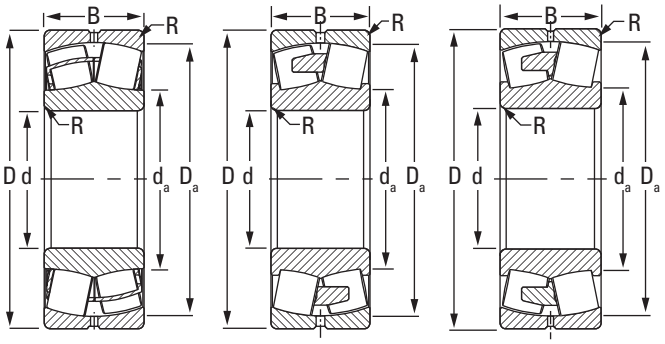

EJ EM/YM EMB/YMB

Continued from previous page.

Bearing Part No.	Bearing Dimensions			Load Ratings		Cage Type	Mounting Data			Equivalent Radial Load Factors(2)				Geometry Factor(3)	Thermal Speed Ratings(4)		Wt.
											Dynamic		Static				
							Fillet(1) (Max.)	Backing Dia.			$\frac{F_a}{F_r} \le e$	$\frac{F_a}{F_r} > e$	In All Cases				
								Shaft	Housing		X = 1	X = 0.67			Oil	Grease	
	Bore d	O.D. D	Width B	Dynamic C	Static C_o		R	d_a	D_a	e	Y	Y	Y_0	C_g			
	mm in.	**mm** in.	**mm** in.	**kN** lbf.	**kN** lbf.		**mm** in.	**mm** in.	**mm** in.						RPM	RPM	**kg** lbs.
22217	**85** 3.3465	**150** 5.9055	**36** 1.4173	**286** 64200	**302** 67900	EJ/EM	**2** 0.08	**101** 4	**139** 5.5	0.22	3.07	4.57	3	0.068	4200	3400	**2.7** 5.9
22218	**90** 3.5433	**160** 6.2992	**40** 1.5748	**355** 79700	**388** 87200	EJ/EM	**2** 0.08	**105** 4.2	**146** 5.8	0.23	2.9	4.31	2.83	0.07	4000	3300	**3.5** 7.7
22219	**95** 3.7402	**170** 6.6929	**43** 1.6929	**385** 86600	**441** 99000	EJ/EM	**2** 0.08	**114** 4.5	**155** 6.1	0.23	2.88	4.29	2.82	0.076	3900	3200	**4.2** 9.2
22220	**100** 3.937	**180** 7.0866	**46** 1.811	**435** 97700	**502** 113000	EJ/EM	**2** 0.08	**120** 4.7	**163** 6.4	0.24	2.85	4.24	2.78	0.079	3800	3100	**5.0** 11.0
22222	**110** 4.3307	**200** 7.874	**53** 2.0866	**555** 125000	**653** 147000	EJ/EM	**2** 0.08	**133** 5.2	**182** 7.2	0.25	2.73	4.06	2.67	0.084	3500	2900	**7.2** 15.8
22224	**120** 4.7244	**215** 8.4646	**58** 2.2835	**647** 145000	**772** 174000	EJ/EM	**2** 0.08	**143** 5.6	**196** 7.7	0.25	2.7	4.02	2.64	0.081	3200	2600	**9.0** 19.8
22226	**130** 5.1181	**230** 9.0551	**64** 2.5197	**757** 170000	**945** 212000	EJ/EM	**2.5** 0.1	**155** 6.1	**210** 8.3	0.26	2.62	3.9	2.56	0.079	2900	2400	**11.3** 24.9
22228	**140** 5.5118	**250** 9.8425	**68** 2.6772	**863** 194000	**1060** 237000	EJ/EM	**2.5** 0.1	**167** 6.6	**228** 9	0.25	2.67	3.98	2.61	0.082	2600	2200	**14.2** 31.2
22230	**150** 5.9055	**270** 10.6299	**73** 2.874	**1000** 225000	**1230** 276000	EJ/EM	**2.5** 0.1	**179** 7	**246** 9.7	0.25	2.69	4	2.63	0.087	2400	2000	**17.8** 39.2
22232	**160** 6.2992	**290** 11.4173	**80** 3.1496	**1170** 263000	**1450** 326000	EJ/EM	**2.5** 0.1	**192** 7.5	**264** 10.4	0.26	2.62	3.91	2.57	0.09	2200	1800	**23.0** 50.6

(1)Maximum shaft or housing fillet radius that bearing corners will clear.
(2)These factors apply for both inch and metric calculations. See engineering section for instructions on use.
(3)Geometry constant for Lubrication Life Factor a_{31} is found in the Bearing Ratings section of the Engineering Manual (order no. 10424).
(4)See thermal speed ratings in the Engineering Manual (order no. 10424).
NOTE: Where EJ and EM/EMB have different load ratings, the more conservative one was taken to use for both assemblies.
NOTE: Tolerance and shaft diameters are shown in tables 2 and 3 on pages 19 and 20 as variances from nominal bearing bore.

223 SERIES (500, 600 SERIES SNT, FSNT)

- Bearings are available with a tapered bore for adapter-type mounting. To order, add the suffix K to bearing number (e.g., 23120K).
- Consult your Timken engineer and www.timken.com for up-to-date information about the availability of the bearings you have selected.
- This section lists spherical roller bearings pertinent to Timken SNT plummer blocks. For a wider selection, consult www.timken.com or the Timken® Spherical Roller Bearing catalog (order no. 10446).

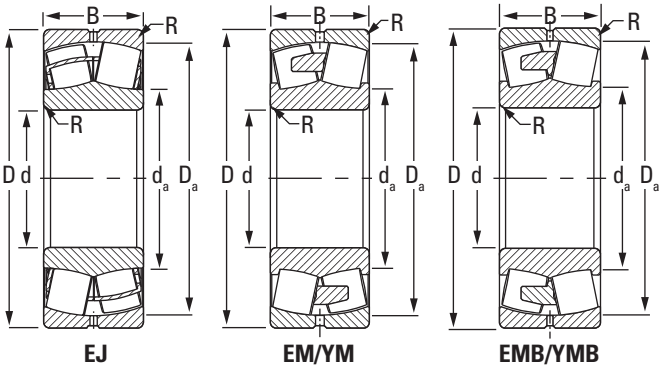

Bearing Part No.	Bearing Dimensions			Load Ratings		Cage Type	Mounting Data			Equivalent Radial Load Factors(2)				Geometry Factor(3)	Thermal Speed Ratings(4)		Wt.
										Dynamic			Static				
	Bore d	O.D. D	Width B	Dynamic C	Static C_o		Fillet(1) (Max.) R	Backing Dia. Shaft d_a	Backing Dia. Housing D_a	e	$\frac{F_a}{F_r} \le e$ X = 1 Y	$\frac{F_a}{F_r} > e$ X = 0.67 Y	In All Cases Y_0	C_g	Oil	Grease	
	mm in.	**mm** in.	**mm** in.	**kN** lbf.	**kN** lbf.		**mm** in.	**mm** in.	**mm** in.						RPM	RPM	**kg** lbs.
22308	**40** 1.5748	**90** 3.5433	**33** 1.2992	**155** 34900	**147** 33100	EJ/EM	**1.5** 0.06	**53** 2.1	**81** 3.2	0.36	1.87	2.79	1.83	0.046	6700	5600	**1.0** 2.2
22309	**45** 1.7717	**100** 3.937	**36** 1.4173	**190** 42700	**182** 40800	EJ/EM	**1.5** 0.06	**58** 2.3	**90** 3.5	0.36	1.9	2.83	1.86	0.049	6100	5100	**1.3** 2.9
22310	**50** 1.9685	**110** 4.3307	**40** 1.5748	**238** 53500	**241** 54200	EJ/EM	**2** 0.08	**65** 2.6	**98** 3.9	0.36	1.89	2.81	1.85	0.055	5500	4600	**1.9** 4.2
22311	**55** 2.1654	**120** 4.7244	**43** 1.6929	**279** 62800	**284** 63800	EJ/EM	**2** 0.08	**69** 2.7	**106** 4.2	0.36	1.89	2.81	1.84	0.057	5100	4300	**2.4** 5.3
22312	**60** 2.3622	**130** 5.1181	**46** 1.811	**321** 72200	**329** 73900	EJ/EM	**2** 0.08	**77** 3	**117** 4.6	0.34	1.98	2.94	1.93	0.061	4700	4000	**3.0** 6.6
22313	**65** 2.5591	**140** 5.5118	**48** 1.8898	**361** 81300	**371** 83300	EJ/EM	**2** 0.08	**84** 3.3	**127** 5	0.33	2.05	3.05	2	0.064	4400	3800	**3.6** 7.9
22314	**70** 2.7559	**150** 5.9055	**51** 2.0079	**395** 88800	**414** 93100	EJ/EM	**2** 0.08	**91** 3.6	**135** 5.3	0.33	2.07	3.08	2.02	0.067	4200	3600	**4.4** 9.7
22315	**75** 2.9528	**160** 6.2992	**55** 2.1654	**450** 101000	**478** 107000	EJ/EM	**2** 0.08	**97** 3.8	**144** 5.7	0.33	2.04	3.04	2	0.071	3900	3300	**5.4** 11.9
22316	**80** 3.1496	**170** 6.6929	**58** 2.2835	**499** 112000	**534** 120000	EJ/EM	**2** 0.08	**103** 4.1	**153** 6	0.33	2.06	3.06	2.01	0.073	3700	3200	**6.4** 14.1
22317	**85** 3.3465	**180** 7.0866	**60** 2.3622	**569** 128000	**623** 140000	EJ/EM	**2.5** 0.1	**110** 4.3	**162** 6.4	0.32	2.11	3.14	2.06	0.076	3500	3000	**7.5** 16.5
22318	**90** 3.5433	**190** 7.4803	**64** 2.5197	**634** 143000	**703** 158000	EJ/EM	**2.5** 0.1	**116** 4.6	**171** 6.7	0.32	2.09	3.11	2.04	0.079	3300	2800	**8.8** 19.4
22319	**95** 3.7402	**200** 7.874	**67** 2.6378	**694** 156000	**774** 174000	EJ/EM	**2.5** 0.1	**122** 4.8	**180** 7.1	0.32	2.1	3.13	2.05	0.082	3000	2600	**10.2** 22.4
22320	**100** 3.937	**215** 8.4646	**73** 2.874	**779** 175000	**856** 193000	EJ/EM	**2.5** 0.1	**130** 5.1	**193** 7.6	0.33	2.06	3.07	2.02	0.072	2800	2400	**12.8** 28.2

(1)Maximum shaft or housing fillet radius that bearing corners will clear.
(2)These factors apply for both inch and metric calculations. See engineering section for instructions on use.
(3)Geometry constant for Lubrication Life Factor a_{31} is found in the Bearing Ratings section of the Engineering Manual (order no. 10424).
(4)See thermal speed ratings in the Engineering Manual (order no. 10424).
NOTE: Where EJ and EM/EMB have different load ratings, the more conservative one was taken to use for both assemblies.
NOTE: Tolerance and shaft diameters are shown in tables 2 and 3 on pages 19 and 20 as variances from nominal bearing bore.

230 SERIES (3000 SERIES SNT, FSNT)

- Bearings are available with a tapered bore for adapter-type mounting. To order, add the suffix K to bearing number (e.g., 23120K).
- Consult your Timken engineer and www.timken.com for up-to-date information about the availability of the bearings you have selected.
- This section lists spherical roller bearings pertinent to Timken SNT plummer blocks. For a wider selection, consult www.timken.com or the Timken® Spherical Roller Bearing catalog (order no. 10446).

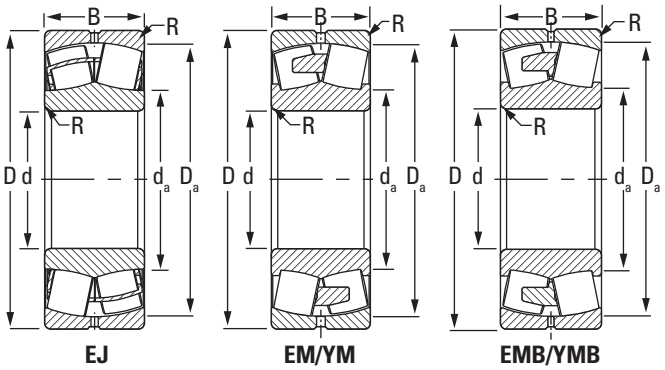

Bearing Part No.	Bearing Dimensions			Load Ratings		Cage Type	Mounting Data			Equivalent Radial Load Factors(2)				Geometry Factor(3)	Thermal Speed Ratings(4)		Wt.
											Dynamic		Static				
							Fillet(1) (Max.)	Backing Dia.			$\frac{F_a}{F_r} \le e$	$\frac{F_a}{F_r} > e$	In All Cases				
								Shaft	Housing		X = 1	X = 0.67					
	Bore d	O.D. D	Width B	Dynamic C	Static C_o		R	d_a	D_a	e	Y	Y	Y_0	C_g	Oil	Grease	
	mm in.	mm in.	mm in.	kN lbf.	kN lbf.		mm in.	mm in.	mm in.						RPM	RPM	kg lbs.
23036	**180** 7.0866	**280** 11.0236	**74** 2.9134	**1020** 229000	**1480** 332000	EJ/EM	**2** 0.08	**204** 8	**260** 10.2	0.23	2.91	4.34	2.85	0.093	2000	1700	**16.8** 37.0
23038	**190** 7.4803	**290** 11.4173	**75** 2.9528	**1060** 239000	**1580** 355000	EJ/EM	**2** 0.08	**214** 8.4	**270** 10.6	0.23	3	4.47	2.93	0.096	1900	1600	**17.8** 39.2
23040	**200** 7.874	**310** 12.2047	**82** 3.2283	**1230** 276000	**1760** 395000	EJ/EM	**2** 0.08	**225** 8.9	**289** 11.4	0.23	2.95	4.4	2.89	0.095	1800	1500	**22.6** 49.7
23044	**220** 8.6614	**340** 13.3858	**90** 3.5433	**1340** 300000	**1970** 443000	EJ/EM	**2.5** 0.1	**247** 9.7	**313** 12.3	0.24	2.77	4.13	2.71	0.105	1700	1400	**29.8** 65.6
23048	**240** 9.4488	**360** 14.1732	**92** 3.622	**1400** 315000	**2140** 480000	EJ/EM	**2.5** 0.1	**267** 10.5	**334** 13.1	0.23	2.91	4.34	2.85	0.111	1500	1300	**31.9** 70.2
23052	**260** 10.2362	**400** 15.748	**104** 4.0945	**1820** 409000	**2740** 617000	EJ/EMB	**3** 0.12	**291** 11.5	**369** 14.5	0.24	2.85	4.24	2.78	0.078	1300	1100	**47.6** 104.7
23056	**280** 11.024	**420** 16.535	**106** 4.173	**1660** 373000	**2790** 627000	EMB	**3** 0.12	**312** 12.3	**389** 15.3	0.23	2.92	4.35	2.86	0.088	1100	930	**51.0** 112.2
23060	**300** 11.811	**460** 18.11	**118** 4.646	**2120** 477000	**3540** 796000	EMB	**3** 0.12	**336** 13.2	**425** 16.8	0.24	2.87	4.27	2.8	0.093	980	830	**71.0** 156.2
23064	**320** 12.598	**480** 18.898	**121** 4.764	**2200** 494000	**3850** 867000	EMB	**3** 0.12	**357** 14.1	**444** 17.5	0.23	2.93	4.36	2.86	0.096	910	780	**77.4** 170.3
23068	**340** 13.386	**520** 20.472	**133** 5.236	**2640** 593000	**4620** 1040000	EMB	**4** 0.16	**384** 15.1	**481** 18.9	0.23	2.96	4.4	2.89	0.101	830	710	**102.7** 225.9
23072	**360** 14.173	**540** 21.26	**134** 5.276	**2590** 583000	**4600** 1030000	EMB	**4** 0.16	**403** 15.9	**499** 19.7	0.23	2.94	4.38	2.88	0.102	800	680	**108.3** 238.3
23076	**380** 14.961	**560** 22.047	**135** 5.315	**2800** 630000	**5090** 1140000	EMB	**4** 0.16	**422** 16.6	**520** 20.5	0.22	3.08	4.58	3.01	0.105	740	630	**114.2** 251.2
23080	**400** 15.748	**600** 23.622	**148** 5.827	**3310** 744000	**5950** 1340000	EMB	**4** 0.16	**447** 17.6	**555** 21.9	0.23	2.98	4.44	2.92	0.111	690	590	**148.7** 327.1
23084	**420** 16.535	**620** 24.409	**150** 5.906	**3450** 774000	**6360** 1430000	YMB	**4** 0.16	**467** 18.4	**576** 22.7	0.22	3.05	4.54	2.98	0.114	650	560	**156.0** 343.2

(1)Maximum shaft or housing fillet radius that bearing corners will clear.
(2)These factors apply for both inch and metric calculations. See engineering section for instructions on use.
(3)Geometry constant for Lubrication Life Factor a_{31} is found in the Bearing Ratings section of the Engineering Manual (order no. 10424).
(4)See thermal speed ratings in the Engineering Manual (order no. 10424).
NOTE: Where EJ and EM/EMB have different load ratings, the more conservative one was taken to use for both assemblies.
NOTE: Tolerance and shaft diameters are shown in tables 2 and 3 on pages 19 and 20 as variances from nominal bearing bore.

231 SERIES (300, 3100 SERIES SNT, FSNT)

- Bearings are available with a tapered bore for adapter-type mounting. To order, add the suffix K to bearing number (e.g., 23120K).
- Consult your Timken engineer and www.timken.com for up-to-date information about the availability of the bearings you have selected.
- This section lists spherical roller bearings pertinent to Timken SNT plummer blocks. For a wider selection, consult www.timken.com or the Timken® Spherical Roller Bearing catalog (order no. 10446).

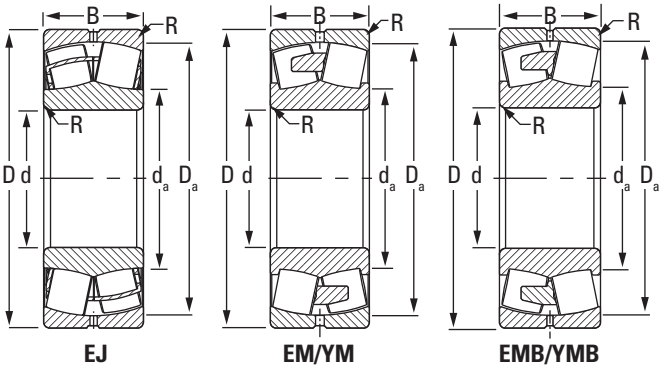

Bearing Part No.	Bearing Dimensions			Load Ratings		Cage Type	Mounting Data			Equivalent Radial Load Factors[2]				Geometry Factor[3]	Thermal Speed Ratings[4]		Wt.
										Dynamic			Static				
							Fillet[1] (Max.)	Backing Dia.			$\frac{F_a}{F_r} \le e$	$\frac{F_a}{F_r} > e$	In All Cases				
								Shaft	Housing		X = 1	X = 0.67					
	Bore d	O.D. D	Width B	Dynamic C	Static C_o		R	d_a	D_a	e	Y	Y	Y_0	C_g	Oil	Grease	
	mm in.	**mm** in.	**mm** in.	**kN** lbf.	**kN** lbf.		**mm** in.	**mm** in.	**mm** in.						RPM	RPM	**kg** lbs.
23134	**170** 6.6929	**280** 11.0236	**88** 3.4646	**1220** 274000	**1710** 384000	EJ/EM	**2** 0.08	**195** 7.7	**258** 10.1	0.28	2.39	3.55	2.33	0.091	1600	1400	**21.7** 47.7
23136	**180** 7.0866	**300** 11.811	**96** 3.7795	**1410** 317000	**2000** 449000	EJ/EM	**2.5** 0.1	**208** 8.2	**275** 10.8	0.29	2.32	3.45	2.27	0.095	1500	1300	**27.6** 60.7
23138	**190** 7.4803	**320** 12.5984	**104** 4.0945	**1630** 365000	**2340** 525000	EJ/EM	**2.5** 0.1	**221** 8.7	**293** 11.5	0.3	2.26	3.36	2.21	0.099	1400	1200	**34.7** 76.3
23140	**200** 7.874	**340** 13.3858	**112** 4.4094	**1720** 386000	**2400** 540000	EM/EMB	**2.5** 0.1	**230** 9	**308** 12.1	0.31	2.15	3.2	2.1	0.101	1300	1200	**41.1** 90.4
23144	**220** 8.6614	**370** 14.5669	**120** 4.7244	**1940** 436000	**2740** 616000	EJ/EMB	**3** 0.12	**252** 9.9	**336** 13.2	0.31	2.17	3.24	2.12	0.107	1200	1000	**52.8** 116.2
23148	**240** 9.4488	**400** 15.748	**128** 5.0394	**2280** 512000	**3330** 748000	EM/EMB	**3** 0.12	**276** 10.9	**364** 14.3	0.3	2.28	3.4	2.23	0.073	1100	930	**64.9** 142.8
23152	**260** 10.236	**440** 17.323	**144** 5.669	**2440** 549000	**3910** 879000	EMB	**3** 0.12	**302** 11.9	**400** 15.7	0.30	2.23	3.31	2.18	0.086	870	760	**90.0** 198.0
23156	**280** 11.024	**460** 18.11	**146** 5.748	**2530** 570000	**4140** 930000	EMB	**4** 0.16	**320** 12.6	**419** 16.5	0.30	2.26	3.36	2.21	0.09	800	710	**94.5** 207.9
23160	**300** 11.811	**500** 19.685	**160** 6.299	**3070** 691000	**5110** 1150000	EMB	**4** 0.16	**345** 13.6	**453** 17.8	0.30	2.25	3.35	2.20	0.093	710	630	**128.7** 283.1
23164	**320** 12.598	**540** 21.26	**176** 6.929	**3650** 819000	**5930** 1330000	EMB	**4** 0.16	**367** 14.4	**490** 19.3	0.31	2.14	3.19	2.10	0.099	650	580	**167.2** 367.8
23168	**340** 13.386	**580** 22.835	**190** 7.48	**4110** 924000	**6830** 1540000	EMB	**4** 0.16	**397** 15.6	**526** 20.7	0.30	2.22	3.30	2.17	0.103	590	530	**210.3** 462.7
23172	**360** 14.173	**600** 23.622	**192** 7.559	**4250** 956000	**7280** 1640000	EMB	**4** 0.16	**419** 16.5	**546** 21.5	0.29	2.29	3.42	2.24	0.106	560	500	**222.1** 488.6
23176	**380** 14.961	**620** 24.409	**194** 7.638	**4490** 1010000	**7580** 1700000	EMB	**4** 0.16	**431** 17	**566** 22.3	0.30	2.28	3.39	2.23	0.109	530	470	**232.6** 511.7
23180	**400** 15.748	**650** 25.591	**200** 7.874	**4770** 1070000	**8110** 1820000	EMB	**5** 0.2	**454** 17.9	**594** 23.4	0.29	2.32	3.46	2.27	0.11	500	450	**261.6** 575.5

[1]Maximum shaft or housing fillet radius that bearing corners will clear.
[2]These factors apply for both inch and metric calculations. See engineering section for instructions on use.
[3]Geometry constant for Lubrication Life Factor a31 is found in the Bearing Ratings section of the Engineering Manual (order no. 10424).
[4]See thermal speed ratings in the Engineering Manual (order no. 10424).
NOTE: Where EJ and EM/EMB have different load ratings, the more conservative one was taken to use for both assemblies.
NOTE: Tolerance and shaft diameters are shown in tables 2 and 3 on pages 19 and 20 as variances from nominal bearing bore.

232 SERIES (500, 600 SERIES SNT, FSNT)

- Bearings are available with a tapered bore for adapter-type mounting. To order, add the suffix K to bearing number (e.g., 23120K).
- Consult your Timken engineer and www.timken.com for up-to-date information about the availability of the bearings you have selected.
- This section lists spherical roller bearings pertinent to Timken SNT plummer blocks. For a wider selection, consult www.timken.com or the Timken® Spherical Roller Bearing catalog (order no. 10446).

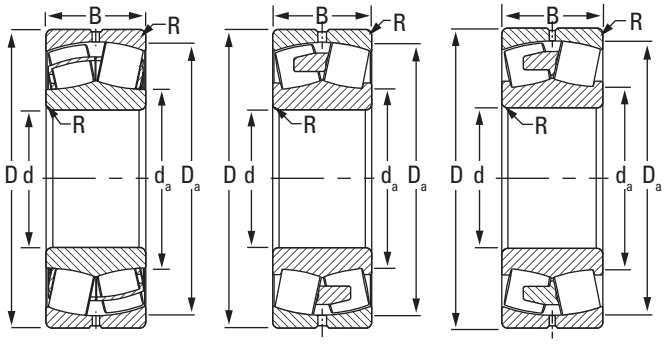

EJ EM/YM EMB/YMB

Bearing Part No.	Bearing Dimensions			Load Ratings		Cage Type	Mounting Data			Equivalent Radial Load Factors(2)				Geometry Factor(3)	Thermal Speed Ratings(4)		Wt.
											Dynamic		Static				
							Fillet(1) (Max.)	Backing Dia.			$\frac{F_a}{F_r} \le e$	$\frac{F_a}{F_r} > e$	In All Cases				
								Shaft	Housing		X = 1	X = 0.67					
	Bore d	O.D. D	Width B	Dynamic C	Static C_o		R	d_a	D_a	e	Y	Y	Y_0	C_g	Oil	Grease	
	mm in.	**mm** in.	**mm** in.	**kN** lbf.	**kN** lbf.		**mm** in.	**mm** in.	**mm** in.						RPM	RPM	**kg** lbs.
23218	**90** 3.5433	**160** 6.2992	**52.4** 2.063	**436** 98000	**521** 117000	EJ/EM	**2** 0.08	**107** 4.2	**147** 5.8	0.3	2.28	3.4	2.23	0.074	3000	2600	**4.5** 9.9
23220	**100** 3.937	**180** 7.0866	**60.3** 2.374	**554** 124000	**678** 152000	EJ/EM	**2** 0.08	**119** 4.7	**164** 6.5	0.3	2.22	3.3	2.17	0.079	2700	2300	**6.6** 14.5
23222	**110** 4.3307	**200** 7.874	**69.8** 2.748	**710** 160000	**887** 199000	EJ/EM	**2** 0.08	**131** 5.2	**182** 7.2	0.32	2.11	3.14	2.06	0.085	2300	2000	**9.6** 21.1
23224	**120** 4.7244	**215** 8.4646	**76** 2.9921	**824** 185000	**1040** 234000	EJ/EM	**2** 0.08	**142** 5.6	**197** 7.7	0.32	2.1	3.13	2.05	0.075	2100	1800	**11.8** 26.0
23226	**130** 5.1181	**230** 9.0551	**80** 3.1496	**915** 206000	**1170** 262000	EJ/EM	**2.5** 0.1	**153** 6	**211** 8.3	0.32	2.14	3.19	2.09	0.079	1900	1700	**14.0** 30.8
23228	**140** 5.5118	**250** 9.8425	**88** 3.4646	**1090** 246000	**1410** 317000	EJ/EM	**2.5** 0.1	**165** 6.5	**229** 9	0.32	2.11	3.13	2.06	0.083	1700	1500	**18.5** 40.7
23230	**150** 5.9055	**270** 10.6299	**96** 3.7795	**1270** 286000	**1660** 372000	EJ/EM	**2.5** 0.1	**178** 7	**247** 9.7	0.32	2.08	3.1	2.04	0.087	1500	1400	**23.8** 52.4
23232	**160** 6.2992	**290** 11.4173	**104** 4.0945	**1470** 330000	**1940** 435000	EJ/EM	**2.5** 0.1	**190** 7.5	**264** 10.4	0.33	2.06	3.06	2.01	0.091	1400	1200	**30.0** 66.0
23234	**170** 6.6929	**310** 12.2047	**110** 4.3307	**1660** 373000	**2200** 494000	EM	**3** 0.12	**202** 8	**281** 11.1	0.33	2.08	3.09	2.03	0.094	1200	1100	**36.6** 80.5

(1)Maximum shaft or housing fillet radius that bearing corners will clear.
(2)These factors apply for both inch and metric calculations. See engineering section for instructions on use.
(3)Geometry constant for Lubrication Life Factor a_{31} is found in the Bearing Ratings section of the Engineering Manual (order no. 10424).
(4)See thermal speed ratings in the Engineering Manual (order no. 10424).
NOTE: Where EJ and EM/EMB have different load ratings, the more conservative one was taken to use for both assemblies.
NOTE: Tolerance and shaft diameters are shown in tables 2 and 3 on pages 19 and 20 as variances from nominal bearing bore.

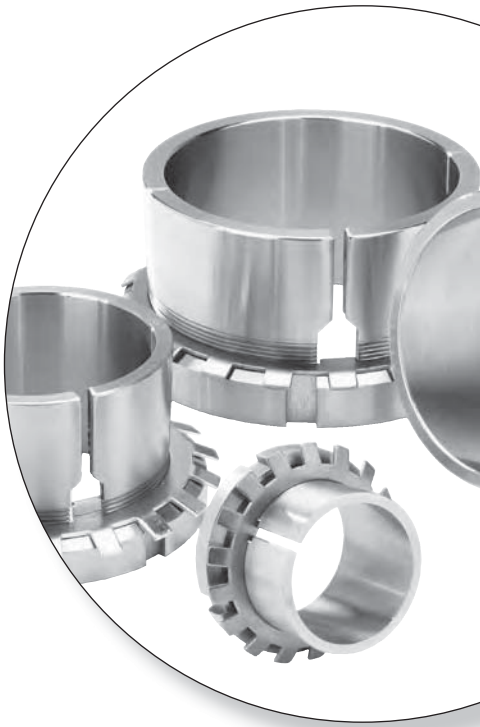

SNT SPHERICAL ROLLER BEARING METRIC ACCESSORIES

Spherical roller bearing accessories are manufactured to the same quality standards as our bearings, ensuring a secure fit to both straight and stepped shafts.

- **Sizes**: Accessories are available for metric and inch shaft sizes from 20 mm to 400 mm.
- **Features**: Extensive product range, including hydraulic assist, for integration into a full range of industrial applications.
- **Benefits**: Supports full range of installation and removal needs, minimizing the chance for damage to the bearing.

NOMENCLATURE

Timken provides accessories for your every need. To complement our line of Timken® spherical roller bearings, we offer bearing sleeves and locking devices in a wide range of sizes. These accessories are manufactured to the same quality standards as our bearings, ensuring a secure fit to straight and stepped shafts. Available in sizes up to 1000 mm, bearing sleeves are available in two distinct designs: assembled adapter sleeves and withdrawal sleeves. Reference the Timken Spherical Roller Bearing Catalog (order no. 10446) for the full listing of accessories.

ADAPTER SLEEVES

Timken adapter sleeves are used in conjunction with a nut and locking device to mount a tapered bore bearing onto a straight shaft using a pull-type fit. Smaller size assemblies (20 mm–200 mm shaft) commonly use simple nuts, whereas larger assemblies (sizes >200 mm) may use HMV hydraulic nuts to assist in mounting. Tables 21 and 22 outline our part number nomenclature, which is consistent with world standards for adapter sleeves.

TABLE 21. METRIC ADAPTER SLEEVES (H, OH) FOR METRIC SHAFT SIZES ARE SUPPLIED WITH CORRESPONDING LOCKNUT AND LOCKING DEVICE

Sleeve	Locknut	Locking Device
H standard metric/OH hydraulic assist	KM, KML, HM	MB, MBL, MS

TABLE 22. METRIC ADAPTER SLEEVES (HA, HE) FOR INCH SHAFT SIZES ARE SUPPLIED WITH CORRESPONDING LOCKNUT AND LOCKING DEVICE

Sleeve	Locknut	Locking Device
HE standard inch (English Standard) HA standard inch (American Standard)	KM, KML	MB, MBL

WITHDRAWAL SLEEVES

Withdrawal sleeves feature a push-type mounting arrangement and a locking device (i.e., locknut or lockplate) to secure a bearing to a shaft. This design is not as widely used as the adapter sleeve assembly, and it does require the use of a specially designed dismounting nut. The Timken part number nomenclature for withdrawal sleeves also conforms to industry-accepted standards. Nuts are not supplied with the withdrawal sleeve and must be ordered separately. The dismounting of large assemblies can be eased by using a hydraulic nut (HMV).

TABLE 23. METRIC WITHDRAWAL SLEEVE FOR METRIC SHAFT SIZES

Sleeve	Dismounting Nut	Hydraulic Nut
AH standard metric/AOH hydraulic assist	KM, HM	HMV

LOCKING DEVICE

Timken offers a wide range of locknuts to locate bearing assemblies on application shafts. Sometimes referred to as shaft or withdrawal nuts, they are used to secure the assembly onto, and sometimes aid with the removal from the shaft.

LOCKWASHERS (MB, MBL AND W)

Locking washers are designed to secure the relative movement of a properly positioned locknut, so that a bearing and adapter sleeve remain tightly fitted to a shaft or a bearing remains secure against a shaft shoulder. The tab in the bore of the washer engages a keyway in the shaft or slot in the adapter sleeve. There are tabs on the O.D. of the washer that can be bent over into slots on the circumference of the locknut. Locking washers are used with locknuts in the KM and KML series.

LOCKPLATES (MS)

Lockplates are bolted onto the outboard face of the locknut and fit into a keyway machined in the shaft or a slot in the adapter sleeve.

- MS series are mounted on metric shafts sizes with HM locknuts.

To learn more about our spherical roller bearing accessories, contact your Timken engineer. Standard suffixes and prefixes are found on page 95.

ACCESSORIES PREFIXES AND SUFFIXES

Prefix	Suffix	Part Description	Full Description
AH		Withdrawal sleeve	Withdrawal sleeve
AHX		Withdrawal sleeve	Withdrawal sleeve – modified
AOH		Withdrawal sleeve – hydraulic	Withdrawal sleeve with oil hole on nut end
AOHX		Withdrawal sleeve – hydraulic	Withdrawal sleeve – modified with oil hole on nut end
H		Adapter sleeve – metric	Adapter sleeve
HA		Adapter sleeve metric – inch shaft	Metric adapter sleeves for shafts with inch dimensions (American Standards)
HE		Adapter sleeve metric – inch shaft	Metric adapter sleeves for shafts with inch dimensions (English Standards)
KM		Locknut	Locknut
KML		Locknut	Locknut – light; smaller outside diameter
HM		Locknut	Locknut/removal nut
HML		Locknut	Locknut/removal nut – light
HME		Locknut	Locknut/removal nut – with locking screw
HM….T		Locknut	Locknut/removal nut
HML….T		Locknut	Locknut/removal nut – light
HMLL… .T		Locknut	Locknut/removal nut – super light
MB		Lockwasher	Lockwasher
MBL		Lockwasher	Lockwasher – light
MS		Lock clip	Locking clip
	G	Sleeve	Thread pitch diameter changed to ISO standard
	H	Locknut	Additional threaded holes on locknut for locking screws (no screws)
	HS	Locknut	Additional threaded holes on locknut for locking screws and screws
OH		Adapter sleeve – hydraulic	Adapter sleeve with oil hole on large end (opposite to the threaded end)
OH..	H	Adapter sleeve – hydraulic	Adapter sleeve with oil hole on nut end – standard design
OH..	HB	Adapter sleeve – hydraulic	Adapter sleeve with grooves and oil hole or two holes for bigger sizes on nut end
OH..	B	Adapter sleeve – hydraulic	Adapter sleeve with grooves and oil hole or two holes for bigger sizes on large end (opposite to the threaded end)
OH..	S	Adapter sleeve – hydraulic	Adapter sleeve with oil hole on large end (opposite to the threaded end) plus nut with eight threaded holes
OH..	BS	Adapter sleeve – hydraulic	Adapter sleeve with grooves and oil hole or two holes for bigger sizes on large end (opposite to the threaded end) plus nut with eight threaded holes

METRIC ACCESSORIES INDEX

Bearing Bore	Bearing Part No.	Adapter Sleeve		Withdrawal Sleeve	
mm		Metric Shaft	Hydraulic Metric Shaft	Metric Shaft	Hydraulic Metric Shaft
25	22205K	H305			
30	22206K	H306			
35	22207K	H307			
40	21308K	H308		AH308	
40	22208K	H308		AH308	
40	22308K	H2308		AH2308	
45	21309K	H309		AH309	
45	22209K	H309		AH309	
45	22309K	H2309		AH2309	
50	21310K	H310		AHX310	
50	22210K	H310		AHX310	
50	22310K	H2310		AHX2310	
55	21311K	H311		AHX311	
55	22211K	H311		AHX311	
55	22311K	H2311		AHX2311	
60	21312K	H312		AHX312	
60	22212K	H312		AHX312	
60	22312K	H2312		AHX2312	
65	21313K	H313		AH313G	
65	22213K	H313		AH313G	
65	22313K	H2313		AH2313G	
70	21314K	H314		AH314G	
70	22214K	H314		AH314G	
70	22314K	H2314		AHX2314G	
75	21315K	H315		AH315G	
75	22215K	H315		AH315G	
75	22315K	H2315		AHX2315G	
80	21316K	H316		AH316	
80	22216K	H316		AH316	
80	22316K	H2316		AHX2316	
85	21317K	H317		AHX317	
85	22217K	H317		AHX317	
85	22317K	H2317		AHX2317	
90	21318K	H318		AHX318	
90	22218K	H318		AHX318	
90	22318K	H2318		AHX2318	
90	23218K	H2318		AHX3218	
95	22219K	H319		AHX319	
95	22319K	H2319		AHX2319	
100	22220K	H320		AHX320	
100	22320K	H2320		AHX2320	
100	23120K	H3120		AHX3120	
100	23220K	H2320		AHX3220	
105	23221K	H2321			
110	22222K	H322		AHX3122	
110	22322K	H2322		AHX2322G	
110	23022K	H322		AHX322	
110	23122K	H3122		AHX3122	

Continued on next page.

Continued from previous page.

Bearing Bore	Bearing Part No.	Adapter Sleeve		Withdrawal Sleeve	
mm		Metric Shaft	Hydraulic Metric Shaft	Metric Shaft	Hydraulic Metric Shaft
110	23222K	H2322		AHX3222G	
110	24122K			AH24122	
120	22224K	H3124		AHX3124	
120	22324K	H2324		AHX2324G	
120	23024K	H3024		AHX3024	
120	23124K	H3124		AHX3124	
120	23224K	H2324		AHX3224G	
120	24024K			AH24024	
120	24124K			AH24124	
130	22226K	H3126		AHX3126	
130	22326K	H2326		AHX2326G	
130	23026K	H3026		AHX3026	
130	23126K	H3126		AHX3126	
130	23226K	H2326		AHX3226G	
130	23926K	H3926			
130	24026K			AH24026	
130	24126K			AH24126	
140	22228K	H3128		AHX3128	
140	22328K	H2328		AHX2328G	
140	23028K	H3028		AHX3028	
140	23128K	H3128		AHX3128	
140	23228K	H2328		AHX3228G	
140	23928K	H3928			
140	24028K			AH24028	
140	24128K			AH24128	
150	22230K	H3130		AHX3130G	
150	22330K	H2330		AHX2330G	
150	23030K	H3030		AHX3030	
150	23130K	H3130		AHX3130G	
150	23230K	H2330		AHX3230G	
150	23930K	H3930			
150	24030K			AH24030	
150	24130K			AH24130	
160	22232K	H3132	OH3132H	AH3132G	AOH3132G
160	22332K	H2332	OH2332H	AH2332G	AOH2332G
160	23032K	H3032	OH3032H	AH3032	
160	23132K	H3132	OH3132H	AH3132G	AOH3132G
160	23232K	H2332	OH2332H	AH3232G	AOH3232G
160	23932K	H3932	OH3932H		
160	24032K			AH24032	
160	24132K			AH24132	
170	22234K	H3134	OH3134H	AH3134G	AOH3134G
170	22334K	H2334	OH2334H	AH2334G	AOH2334G
170	23034K	H3034	OH3034H	AH3034	
170	23134K	H3134	OH3134H	AH3134G	AOH3134G
170	23234K	H2334	OH2334H	AH3234G	AOH3234G
170	23934K	H3934	OH3934H	AH3934	AOH3934
170	24034K			AH24034	

Continued on next page.

METRIC ACCESSORIES INDEX – *continued*

Bearing Bore	Bearing Part No.	Adapter Sleeve		Withdrawal Sleeve	
mm		Metric Shaft	Hydraulic Metric Shaft	Metric Shaft	Hydraulic Metric Shaft
170	24134K			AH24134	
180	22236K	H3136	OH3136H	AH2236G	AOH2236G
180	22336K	H2336	OH2336H	AH2336G	AOH2336G
180	23036K	H3036	OH3036H	AH3036	AOH3036
180	23136K	H3136	OH3136H	AH3136G	AOH3136G
180	23236K	H2336	OH2336H	AH3236G	AOH3236G
180	23936K	H3936	OH3936H	AH3936	AOH3936
180	24036K			AH24036	
180	24136K			AH24136	
190	22238K	H3138	OH3138H	AH2238G	AOH2238G
190	22338K	H2338	OH2338H	AH2338G	AOH2338G
190	23038K	H3038	OH3038H	AH3038G	AOH3038G
190	23138K	H3138	OH3138H	AH3138G	AOH3138G
190	23238K	H2338	OH2338H	AH3238G	AOH3238G
190	23938K	H3938	OH3938H	AH3938	AOH3938
190	24038K			AH24038	
190	24138K			AH24138	
200	22240K	H3140	OH3140H	AH2240	AOH2240
200	22340K	H2340	OH2340H	AH2340	AOH2340
200	23040K	H3040	OH3040H	AH3040G	AOH3040G
200	23140K	H3140	OH3140H	AH3140	AOH3140
200	23240K	H2340	OH2340H	AH3240	AOH3240
200	23940K	H3940	OH3940H	AH3940	AOH3940
200	24040K			AH24040	
200	24140K			AH24140	
220	22244K	H3144	OH3144H	AH2244	AOH2244
220	22344K	H2344	OH2344H	AH2344	AOH2344
220	23044K	H3044	OH3044H	AH3044G	AOH3044G
220	23144K	H3144	OH3144H	AH3144	AOH3144
220	23244K	H2344	OH2344H	AH2344	AOH2344
220	23944K	H3944	OH3944H	AH3944	AOH3944
220	24044K			AH24044	AOH24044
220	24144K			AH24144	AOH24144
240	22248K	H3148	OH3148H	AH2248	AOH2248
240	22348K	H2348	OH2348H	AH2348	AOH2348
240	23048K	H3048	OH3048H	AH3048	AOH3048
240	23148K	H3148	OH3148H	AH3148	AOH3148
240	23248K	H2348	OH2348H	AH2348	AOH2348
240	23948K	H3948	OH3948H	AH3948	AOH3948
240	24048K			AH24048	AOH24048
240	24148K			AH24148	AOH24148
260	22252K	H3152	OH3152H	AH2252G	AOH2252G
260	22352K	H2352	OH2352H	AH2352G	AOH2352G
260	23052K	H3052	OH3052H	AH3052	AOH3052
260	23152K	H3152	OH3152H	AH3152G	AOH3152G
260	23252K	H2352	OH2352H	AH2352G	AOH2352G
260	23952K	H3952	OH3952H	AH3952	AOH3952
260	24052K				AOH24052G

Continued on next page.

Continued from previous page.

Bearing Bore	Bearing Part No.	Adapter Sleeve		Withdrawal Sleeve	
mm		Metric Shaft	Hydraulic Metric Shaft	Metric Shaft	Hydraulic Metric Shaft
260	24152K			AH24152	AOH24152
280	22256K	H3156	OH3156H	AH2256G	AOH2256G
280	22356K	H2356	OH2356H	AH2356G	AOH2356G
280	23056K	H3056	OH3056H	AH3056	AOH3056
280	23156K	H3156	OH3156H	AH3156G	AOH3156G
280	23256K	H2356	OH2356H	AH2356G	AOH2356G
280	23956K	H3956	OH3956H	AH3956	AOH3956
280	24056K				AOH24056G
280	24156K			AH24156	AOH24156
300	22260K	H3160	OH3160H	AH2260G	AOH2260G
300	23060K	H3060	OH3060H	AH3060	AOH3060
300	23160K	H3160	OH3160H	AH3160G	AOH3160G
300	23260K	H3260	OH3260H	AH3260G	AOH3260G
300	23960K	H3960	OH3960H	AH3960	AOH3960
300	24060K				AOH24060G
300	24160K			AH24160	AOH24160
320	22264K	H3164	OH3164H	AH2264G	AOH2264G
320	23064K	H3064	OH3064H	AH3064G	AOH3064G
320	23164K	H3164	OH3164H	AH3164G	AOH3164G
320	23264K	H3264	OH3264H	AH3264G	AOH3264G
320	23964K	H3964	OH3964H	AH3964	AOH3964
320	24064K				AOH24064G
320	24164K			AH24164	AOH24164
340	23068K	H3068	OH3068H	AH3068G	AOH3068G
340	23168K	H3168	OH3168H	AH3168G	AOH3168G
340	23268K	H3268	OH3268H	AH3268G	AOH3268G
340	23968K	H3968	OH3968H	AH3968	AOH3968
340	24068K			AH24068	AOH24068
340	24168K			AH24168	AOH24168
360	23072K	H3072	OH3072H	AH3072G	AOH3072G
360	23172K	H3172	OH3172H	AH3172G	AOH3172G
360	23272K	H3272	OH3272H	AH3272G	AOH3272G
360	23972K	H3972	OH3972H	AH3972	AOH3972
360	24072K			AH24072	AOH24072
360	24172K			AH24172	AOH24172
380	23076K	H3076	OH3076H	AH3076G	AOH3076G
380	23176K	H3176	OH3176H	AH3176G	AOH3176G
380	23276K	H3276	OH3276H	AH3276G	AOH3276G
380	23976K	H3976	OH3976H	AH3976	AOH3976
380	24076K			AH24076	AOH24076
380	24176K			AH24176	AOH24176
400	22380K	H3280	OH3280H	AH3280G	AOH3280G
400	23080K	H3080	OH3080H	AH3080G	AOH3080G
400	23180K	H3180	OH3180H	AH3180G	AOH3180G
400	23280K	H3280	OH3280H	AH3280G	AOH3280G
400	23980K	H3980	OH3980H	AH3980	AOH3980
400	24080K			AH24080	AOH24080
400	24180K			AH24180	AOH24180

METRIC H ADAPTER SLEEVES

- Effective tapered bore bearing assembly.
- Includes mounting sleeve, locknut and lockwasher or lockplate.
- Other dimensions may be available, consult your Timken engineer.

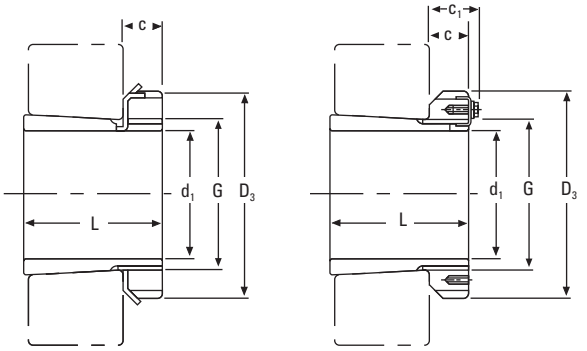

$d_1 \leq 180$ mm $d_1 \geq 200$ mm

d_1	Sleeve Part No.[1]	L	C	Thread[2] G	D_3	C_1	Weight	Locknuts	Lockwasher and Lockplates	Appropriate Hydraulic Nut
mm		mm	mm	mm	mm	mm	kg			
20	H305	29	8	M 25x1.5	38	–	0.17	KM5	MB5	–
25	H306	31	8	M 30x1.5	45	–	0.24	KM6	MB6	–
30	H307	35	9	M 35x1.5	52	–	0.31	KM7	MB7	–
35	H308	36	10	M 40x1.5	58	–	0.42	KM8	MB8	–
35	H2308	46	10	M 40x1.5	58	–	0.22	KM8	MB8	–
40	H309	39	11	M 45x1.5	65	–	0.55	KM9	MB9	–
40	H2309	50	11	M 45x1.5	65	–	0.28	KM9	MB9	–
45	H310	42	12	M 50x1.5	70	–	0.67	KM10	MB10	HMV10
45	H2310	55	12	M 50x1.5	70	–	0.36	KM10	MB10	HMV10
50	H311	45	12	M 55x2	75	–	0.76	KM11	MB11	HMV11
50	H2311	59	12	M 55x2	75	–	0.42	KM11	MB11	HMV11
55	H312	47	13	M 60x2	80	–	0.87	KM12	MB12	HMV12
55	H2312	62	13	M 60x2	80	–	0.48	KM12	MB12	HMV12
60	H313	50	14	M 65x2	85	–	1.01	KM13	MB13	HMV13
60	H314	52	14	M 70x2	92	–	1.59	KM14	MB14	HMV14
60	H2313	65	14	M 65x2	85	–	0.56	KM13	MB13	HMV13
60	H2314	68	14	M 70x2	92	–	0.90	KM14	MB14	HMV14
65	H315	55	15	M 75x2	98	–	1.83	KM15	MB15	HMV15
65	H2315	73	15	M 75x2	98	–	1.05	KM15	MB15	HMV15
70	H316	59	17	M 80x2	105	–	2.27	KM16	MB16	HMV16
70	H2316	78	17	M 80x2	105	–	1.28	KM16	MB16	HMV16
75	H317	63	18	M 85x2	110	–	2.60	KM17	MB17	HMV17
75	H2317	82	18	M 85x2	110	–	1.45	KM17	MB17	HMV17
80	H318	65	18	M 90x2	120	–	3.02	KM18	MB18	HMV18
80	H2318	86	18	M 90x2	120	–	1.69	KM18	MB18	HMV18
85	H319	68	19	M 95x2	125	–	3.44	KM19	MB19	HMV19
85	H2319	90	19	M 95x2	125	–	1.92	KM19	MB19	HMV19
90	H320	71	20	M 100x2	130	–	3.73	KM20	MB20	HMV20
90	H3120	76	20	M 100x2	130	–	1.80	KM20	MB20	HMV20
90	H2320	97	20	M 100x2	130	–	2.15	KM20	MB20	HMV20

[1]Adapter sleeves are supplied complete with locknuts and lockwasher or lockplates.
[2]M means metric thread and the digits are major diameter of thread and pitch.
NOTE: Sleeves are not sold separately.

Continued on next page.

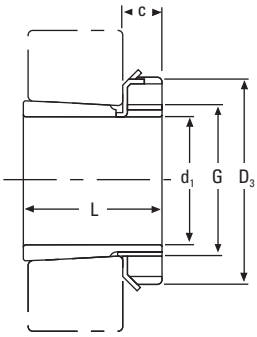

$d_1 \leq 180$ mm

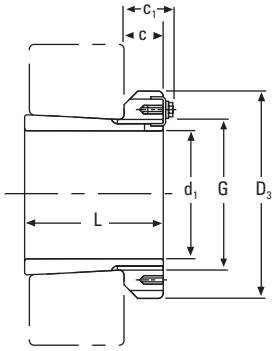

$d_1 \geq 200$ mm

Continued from previous page.

d_1	Sleeve Part No.[1]	L	C	Thread[2] G	D_3	C_1	Weight	Locknuts	Lockwasher and Lockplates	Appropriate Hydraulic Nut
mm		**mm**	**mm**	**mm**	**mm**	**mm**	**kg**			
95	H321	**74**	**20**	**M 105x2**	**140**	–	**4.30**	KM 21	MB21	HMV21
95	H2321	**101**	**20**	**M 105x2**	**140**	–	**2.46**	KM21	MB21	HMV21
100	H322	**77**	**21**	**M 110x2**	**145**	–	**4.81**	KM22	MB22	HMV22
100	H3122	**81**	**21**	**M 110x2**	**145**	–	**2.25**	KM22	MB22	HMV22
100	H2322	**105**	**21**	**M 110x2**	**145**	–	**2.74**	KM22	MB22	HMV22
110	H3024	**72**	**22**	**M 120x2**	**145**	–	**1.93**	KML24	MBL24	HMV24
110	H3124	**88**	**22**	**M 120x2**	**155**	–	**2.64**	KM24	MB24	HMV24
110	H2324	**112**	**22**	**M 120x2**	**155**	–	**3.19**	KM24	MB24	HMV24
115	H3926	**65**	**23**	**M 130x2**	**155**	–	**2.40**	KML26	MBL26	HMV26
115	H3026	**80**	**23**	**M 130x2**	**155**	–	**2.85**	KML26	MBL26	HMV26
115	H3126	**92**	**23**	**M 130x2**	**165**	–	**3.66**	KM26	MB26	HMV26
115	H2326	**121**	**23**	**M 130x2**	**165**	–	**4.60**	KM26	MB26	HMV26
125	H3928	**66**	**24**	**M 140x2**	**165**	–	**2.70**	KML28	MBL28	HMV28
125	H3028	**82**	**24**	**M 140x2**	**165**	–	**3.16**	KML28	MBL28	HMV28
125	H3128	**97**	**24**	**M 140x2**	**180**	–	**4.34**	KM28	MB28	HMV28
125	H2328	**131**	**24**	**M 140x2**	**180**	–	**5.55**	KM28	MB28	HMV28
135	H3930	**76**	**26**	**M 150x2**	**180**	–	**3.60**	KML30	MBL30	HMV30
135	H3030	**87**	**26**	**M 150x2**	**180**	–	**3.89**	KML30	MBL30	HMV30
135	H3130	**111**	**26**	**M 150x2**	**195**	–	**5.52**	KM30	MB30	HMV30
135	H2330	**139**	**26**	**M 150x2**	**195**	–	**6.63**	KM30	MB30	HMV30
140	H3932	**78**	**27.5**	**M 160x3**	**190**	–	**4.60**	KML32	MBL32	HMV32
140	H3032	**93**	**27.5**	**M 160x3**	**190**	–	**5.21**	KML32	MBL32	HMV32
140	H3132	**119**	**28**	**M 160x3**	**210**	–	**7.67**	KM32	MB32	HMV32
140	H2332	**147**	**28**	**M 160x3**	**210**	–	**9.14**	KM32	MB32	HMV32
150	H3934	**79**	**27.5**	**M 170x3**	**200**	–	**5.00**	KML34	MBL34	HMV34
150	H3034	**101**	**28.5**	**M 170x3**	**200**	–	**5.99**	KML34	MBL34	HMV34
150	H3134	**122**	**29**	**M 170x3**	**220**	–	**8.38**	KM34	MB34	HMV34
150	H2334	**154**	**29**	**M 170x3**	**220**	–	**10.20**	KM34	MB34	HMV34

[1]Adapter sleeves are supplied complete with locknuts and lockwasher or lockplates.
[2]M means metric thread and the digits are major diameter of thread and pitch.
NOTE: Sleeves are not sold separately.

Continued on next page.

METRIC H ADAPTER SLEEVES – *continued*

- Effective tapered bore bearing assembly.
- Includes mounting sleeve, locknut and lockwasher or lockplate.
- Other dimensions may be available, consult your Timken engineer.

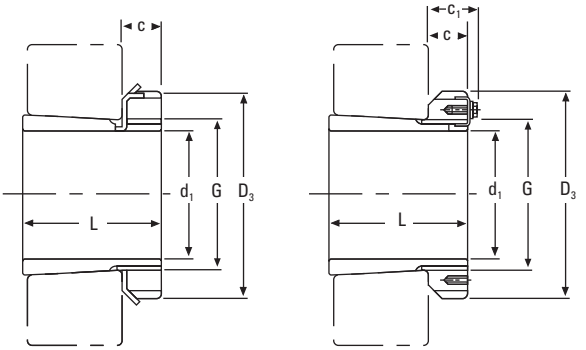

$d_1 \leq 180$ mm $d_1 \geq 200$ mm

Continued from previous page.

d_1	Sleeve Part No.[1]	L	C	Thread[2][3] G	D_3	C_1	Weight	Locknuts	Lockwasher and Lockplates	Appropriate Hydraulic Nut
mm		mm	mm	mm	mm	mm	kg			
160	H3936	87	29.5	M 180x3	210	–	5.70	KML36	MBL36	HMV36
160	H3036	109	29.5	M 180x3	210	–	6.83	KML36	MBL36	HMV36
160	H3136	131	30	M 180x3	230	–	9.50	KM36	MB36	HMV36
160	H2336	161	30	M 180x3	230	–	11.30	KM36	MB36	HMV36
170	H3938	89	30.5	M 190x3	220	–	6.19	KML38	MBL38	HMV38
170	H3038	112	30.5	M 190x3	220	–	7.45	KML38	MBL38	HMV38
170	H3138	141	31	M 190x3	240	–	10.80	KM38	MB38	HMV38
170	H2338	169	31	M 190x3	240	–	12.60	KM38	MB38	HMV38
180	H3940	98	31.5	M 200x3	240	–	7.89	KML40	MBL40	HMV40
180	H3040	120	31.5	M 200x3	240	–	9.19	KML40	MBL40	HMV40
180	H3140	150	32	M 200x3	250	–	12.10	KM40	MB40	HMV40
180	H2340	176	32	M 200x3	250	–	13.90	KM40	MB40	HMV40
200	H3944	96	30	Tr 220x4	260	41	8.16	HM3044	MS3044	HMV44
200	H3044	126	30	Tr 220x4	260	41	10.30	HM3044	MS3044	HMV44
200	H3144	161	35	Tr 220x4	280	–	15.10	HM44T	MB44	HMV44
200	H2344	186	35	Tr 220x4	280	–	17.00	HM44T	MB44	HMV44
220	H3948	101	34	Tr 240x4	290	46	11.00	HM3048	MS3048	HMV48
220	H3048	133	34	Tr 240x4	290	46	13.20	HM3048	MS3048	HMV48
220	H3148	172	37	Tr 240x4	300	–	17.60	HM48T	MS48	HMV48
220	H2348	199	37	Tr 240x4	300	–	20.00	HM48T	MS48	HMV48
240	H3952	116	34	Tr 260x4	310	46	12.80	HM3052	MS3052	HMV52
240	H3052	145	34	Tr 260x4	310	46	15.30	HM3052	MS3052	HMV52
240	H3152	190	39	Tr 260x4	330	–	22.30	HM52T	MB52	HMV52
240	H2352	211	39	Tr 260x4	330	–	24.50	HM52T	MB52	HMV52
260	H3956	121	38	Tr 280x4	330	50	15.30	HM3056	MS3056	HMV56
260	H3056	152	38	Tr 280x4	330	50	17.70	HM3056	MS3056	HMV56
260	H3156	195	41	Tr 280x4	350	–	25.10	HM56T	MB56	HMV56
260	H2356	224	41	Tr 280x4	350	–	28.40	HM56T	MB56	HMV56
280	H3960	140	42	Tr 300x4	360	54	20.00	HM3060	MS3060	HMV60
280	H3060	168	42	Tr 300x4	360	54	22.80	HM3060	MS3060	HMV60
280	H3160	208	40	Tr 300x4	380	53	30.20	HM3160	MS3160	HMV60
280	H3260	240	40	Tr 300x4	380	53	34.10	HM3160	MS3160	HMV60
300	H3964	140	42	Tr 320x5	380	55	21.50	HM3064	MS3064	HMV64
300	H3064	171	42	Tr 320x5	380	55	24.60	HM3064	MS3064	HMV64
300	H3164	226	42	Tr 320x5	400	56	34.90	HM3164	MS3164	HMV64
300	H3264	258	42	Tr 320x5	400	56	39.30	HM3164	MS3164	HMV64

[1]Adapter sleeves are supplied complete with locknuts and lockwasher or lockplates.
[2]M means metric thread and the digits are major diameter of thread and pitch.
[3]Tr means 30°. Trapezoid thread and the digits are outside diameter of thread and pitch.
NOTE: Sleeves are not sold separately.

Continued on next page.

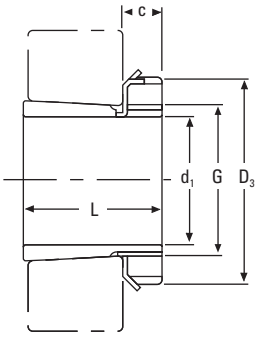

$d_1 \leq 180$ mm

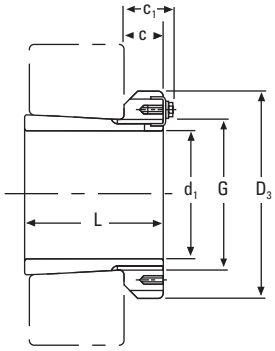

$d_1 \geq 200$ mm

Continued from previous page.

d_1	Sleeve Part No.[1]	L	C	Thread[2] G	D_3	C_1	Weight	Locknuts	Lockwasher and Lockplates	Appropriate Hydraulic Nut
mm		**mm**	**mm**	**mm**	**mm**	**mm**	**kg**			
320	H3968	**144**	**45**	**Tr 340x5**	**400**	**58**	**24.50**	HM3068	MS3068	HMV68
320	H3068	**187**	**45**	**Tr 340x5**	**400**	**58**	**28.70**	HM3068	MS3068	HMV68
320	H3168	**254**	**55**	**Tr 340x5**	**440**	**72**	**50.00**	HM3168	MS3168	HMV68
320	H3268	**288**	**55**	**Tr 340x5**	**440**	**72**	**54.60**	HM3168	MS3168	HMV68
340	H3972	**144**	**45**	**Tr 360x5**	**420**	**58**	**25.20**	HM3072	MS3072	HMV72
340	H3072	**188**	**45**	**Tr 360x5**	**420**	**58**	**30.50**	HM3072	MS3072	HMV72
340	H3172	**259**	**58**	**Tr 360x5**	**460**	**75**	**56.00**	HM3172	MS3172	HMV72
340	H3272	**299**	**58**	**Tr 360x5**	**460**	**75**	**60.60**	HM3172	MS3172	HMV72
360	H3976	**164**	**48**	**Tr 380x5**	**450**	**62**	**31.50**	HM3076	MS3076	HMV76
360	H3076	**193**	**48**	**Tr 380x5**	**450**	**62**	**35.80**	HM3076	MS3076	HMV76
360	H3176	**264**	**60**	**Tr 380x5**	**490**	**77**	**61.70**	HM3176	MS3176	HMV76
360	H3276	**310**	**60**	**Tr 380x5**	**490**	**77**	**69.60**	HM3176	MS3176	HMV76
380	H3980	**168**	**52**	**Tr 400x5**	**470**	**66**	**35.00**	HM3080	MS3080	HMV80
380	H3080	**210**	**52**	**Tr 400x5**	**470**	**66**	**41.30**	HM3080	MS3080	HMV80
380	H3180	**272**	**62**	**Tr 400x5**	**520**	**82**	**73.00**	HM3180	MS3180	HMV80
380	H3280	**328**	**62**	**Tr 400x5**	**520**	**82**	**81.00**	HM3180	MS3180	HMV80
400	H3984	**168**	**52**	**Tr 420x5**	**490**	**66**	**36.60**	HM3084	MS3084	HMV84
400	H3084	**212**	**52**	**Tr 420x5**	**490**	**66**	**43.70**	HM3084	MS3084	HMV84
400	H3184	**304**	**70**	**Tr 420x5**	**540**	**90**	**84.20**	HM3184	MS3184	HMV84
400	H3284	**352**	**70**	**Tr 420x5**	**540**	**90**	**96.00**	HM3184	MS3184	HMV84
410	H3988	**189**	**60**	**Tr 440x5**	**520**	**77**	**58.00**	HM3088	MS3088	HMV88
410	H3088	**228**	**60**	**Tr 440x5**	**520**	**77**	**65.20**	HM3088	MS3088	HMV88
410	H3188	**307**	**70**	**Tr 440x5**	**560**	**90**	**104.00**	HM3188	MS3188	HMV88
410	H3288	**361**	**70**	**Tr 440x5**	**560**	**90**	**118.00**	HM3188	MS3188	HMV88
430	H3992	**189**	**60**	**Tr 460x5**	**540**	**77**	**60.00**	HM3092	MS3092	HMV92
430	H3192	**326**	**75**	**Tr 460x5**	**580**	**95**	**116.00**	HM3192	MS3192	HMV92
430	H3292	**382**	**75**	**Tr 460x5**	**580**	**95**	**134.00**	HM3192	MS3192	HMC92
450	H3996	**200**	**60**	**Tr 480x5**	**560**	**77**	**66.00**	HM3096	MS3096	HMV96
450	H3296	**397**	**75**	**Tr 480x5**	**620**	**95**	**153.00**	HM3196	MS3196	HMV96

[1]Adapter sleeves are supplied complete with locknuts and lockwasher or lockplates.
[2]Tr means 30°. Trapezoid thread and the digits are outside diameter of thread and pitch.
NOTE: Sleeves are not sold separately.

METRIC OH HYDRAULIC ADAPTER SLEEVES

- Includes sleeve, nut and lockwasher or lockplate.
- Hydraulic assistance facilitates mounting of large bearing. Oil pump required to inject pressurized oil.
- Other dimensions may be available, consult your Timken engineer.

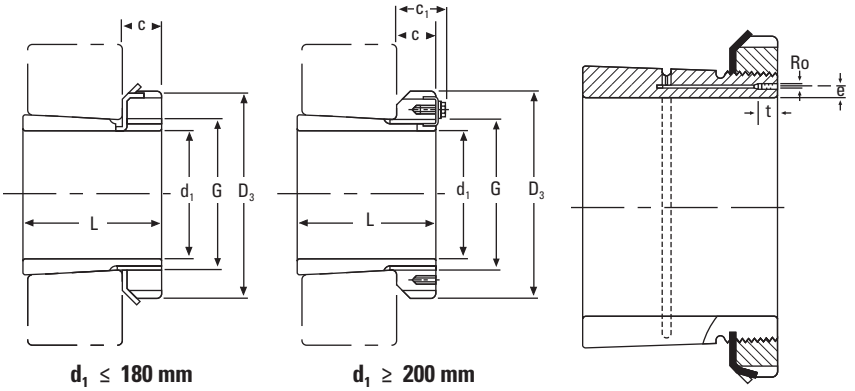

$d_1 \leq 180$ mm $d_1 \geq 200$ mm

d_1	Sleeve Part No.[1]	L	C	Thread[2][3] G	D_3	C_1[4]	Ro	e	t	Weight	Locknuts	Lockwasher and Lockplate	Appropriate Hydraulic Nut
mm		mm	mm	mm	mm	mm		mm	mm	kg			
140	OH3032H	93	27.5	M 160x3	190	–		4	7	5.21	KML32	MBL32	HMV32
140	OH3132H	119	28	M 160x3	210	–		4	7	7.67	KM32	MB32	HMV32
150	OH3034H	101	28.5	M 170x3	200	–		4	7	5.99	KML34	MBL34	HMV34
150	OH3134H	122	29	M 170x3	220	–		4	7	8.38	KM34	MB34	HMV34
160	OH3936H	87	29.5	M 180x3	210	–		4	7	5.70	KML36	MBL36	HMV36
160	OH3036H	109	29.5	M 180x3	210	–		4	7	6.83	KML36	MBL36	HMV36
160	OH3136H	131	30	M 180x3	230	–		4	7	9.50	KM36	MB36	HMV36
170	OH3938H	89	30.5	M 190x3	220	–		4	7	6.19	KML38	MBL38	HMV38
170	OH3038H	112	30.5	M 190x3	220	–		4	7	7.45	KML38	MBL38	HMV38
170	OH3138H	141	31	M 190x3	240	–		4	7	10.80	KM38	MB38	HMV38
170	OH2338H	169	31	M 190x3	240	–		4	7	12.60	KM38	MB38	HMV38
180	OH3940H	98	31.5	M 200x3	240	–		4	7	7.89	KML40	MBL40	HMV40
180	OH3040H	120	31.5	M 200x3	240	–		4	7	9.19	KML40	MBL40	HMV40
180	OH3140H	150	32	M 200x3	250	–		4	7	12.10	KM40	MB40	HMV40
180	OH2340H	176	32	M 200x3	250	–		4	7	13.90	KM40	MB40	HMV40
200	OH3944H	96	30	Tr 220x4	260	41	M6	4	7	8.16	HM3044	MS3044	HMV44
200	OH3044H	126	30	Tr 220x4	260	41	M6	4	7	10.30	HM3044	MS3044	HMV44
200	OH3144H	161	35	Tr 220x4	280	–	M6	4	7	15.10	HM44T	MB44	HMV44
200	OH2344H	186	35	Tr 220x4	280	–	M6	4	7	17.00	HM44T	MB44	HMV44
220	OH3948H	101	34	Tr 240x4	290	46	M6	4	7	11.00	HM3048	MS3048	HMV48
220	OH3048H	133	34	Tr 240x4	290	46	M6	4	7	13.20	HM3048	MS3048	HMV48
220	OH3148H	172	37	Tr 240x4	300	–	M6	4	7	17.60	HM48T	MB48	HMV48
220	OH2348H	199	37	Tr 240x4	300	–	M6	4	7	20.00	HM48T	MB48	HMV48
240	OH3952H	116	34	Tr 260x4	310	46	M6	4	7	12.80	HM3052	MS3052	HMV52
240	OH3052H	145	34	Tr 260x4	310	46	M6	4	7	15.30	HM3052	MS3052	HMV52
240	OH3152H	190	39	Tr 260x4	330	–	M6	4	7	22.30	HM52T	MB52	HMV52
240	OH2352H	211	39	Tr 260x4	330	–	M6	4	7	24.50	HM52T	MB52	HMV52

[1]Hydraulic adapter sleeves are supplied complete with locknuts and lockwasher or lockplates.
[2]M means metric thread and the digits are major diameter of thread and pitch.
[3]Tr means 30°. Trapezoid thread and the digits are outside diameter of thread and pitch.
[4]Adapters with dimensions C_1 have a locking device as shown in the illustration.

Continued on next page.

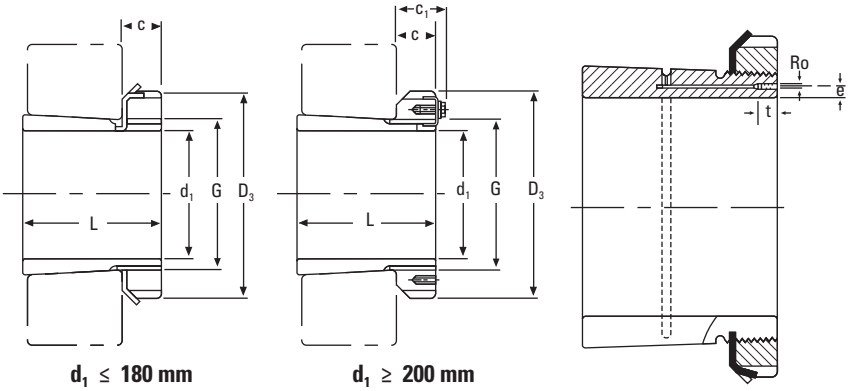

Continued from previous page.

$d_1 \leq$ 180 mm **$d_1 \geq$ 200 mm**

d_1	Sleeve Part No.[1]	L	C	Thread[2] G	D_3	C_1[3]	Ro	e	t	Weight	Locknuts	Lockwasher and Lockplate	Appropriate Hydraulic Nut
mm		**mm**	**mm**	**mm**	**mm**	**mm**		**mm**	**mm**	**kg**			
260	OH3956H	**121**	**38**	**Tr 280x4**	**330**	**50**	M6	4	7	**15.30**	HM3056	MS3056	HMV56
260	OH3056H	**152**	**38**	**Tr 280x4**	**330**	**50**	M6	4	7	**17.70**	HM3056	MS3056	HMV56
260	OH3156H	**195**	**41**	**Tr 280x4**	**350**	**–**	M6	4	7	**25.10**	HM56T	MB56	HMV56
260	OH2356H	**224**	**41**	**Tr 280x4**	**350**	**–**	M6	4	7	**28.40**	HM56T	MB56	HMV56
280	OH3960H	**140**	**42**	**Tr 300x4**	**360**	**54**	M6	4	7	**20.00**	HM3060	MS3060	HMV60
280	OH3060H	**168**	**42**	**Tr 300x4**	**360**	**54**	M6	4	7	**22.80**	HM3060	MS3060	HMV60
280	OH3160H	**208**	**40**	**Tr 300x4**	**380**	**53**	M6	4	7	**30.20**	HM3160	MS3160	HMV60
280	OH3260H	**240**	**40**	**Tr 300x4**	**380**	**53**	M6	4	7	**34.10**	HM3160	MS3160	HMV60
300	OH3964H	**140**	**42**	**Tr 320x5**	**380**	**55**	M6	3.5	7	**21.50**	HM3064	MS3064	HMV64
300	OH3064H	**171**	**42**	**Tr 320x5**	**380**	**55**	M6	3.5	7	**24.60**	HM3064	MS3064	HMV64
300	OH3164H	**226**	**42**	**Tr 320x5**	**400**	**56**	M6	3.5	7	**34.90**	HM3164	MS3164	HMV64
300	OH3264H	**258**	**42**	**Tr 320x54**	**400**	**56**	M6	3.5	7	**39.30**	HM3164	MS3164	HMV64
320	OH3968H	**144**	**45**	**Tr 340x5**	**400**	**58**	M6	3.5	7	**24.50**	HM3068	MS3068	HMV68
320	OH3068H	**187**	**45**	**Tr 340x5**	**400**	**58**	M6	3.5	7	**28.70**	HM3068	MS3068	HMV68
320	OH3168H	**254**	**55**	**Tr 340x5**	**440**	**72**	M6	3.5	7	**50.00**	HM3168	MS3168	HMV68
320	OH3268H	**288**	**55**	**Tr 340x5**	**440**	**72**	M6	3.5	7	**54.60**	HM3168	MS3168	HMV68
340	OH3972H	**144**	**45**	**Tr 360x5**	**420**	**58**	M6	3.5	7	**25.20**	HM3072	MS3072	HMV72
340	OH3072H	**188**	**45**	**Tr 360x5**	**420**	**58**	M6	3.5	7	**30.50**	HM3072	MS3072	HMV72
340	OH3172H	**259**	**58**	**Tr 360x5**	**460**	**75**	M6	3.5	7	**56.00**	HM3172	MS3172	HMV72
340	OH3272H	**299**	**58**	**Tr 360x5**	**460**	**75**	M6	3.5	7	**60.60**	HM3172	MS3172	HMV72
360	OH3976H	**164**	**48**	**Tr 380x5**	**450**	**62**	M6	3.5	7	**31.50**	HM3076	MS3076	HMV76
360	OH3076H	**193**	**48**	**Tr 380x5**	**450**	**62**	M6	3.5	7	**35.80**	HM3076	MS3076	HMV76
360	OH3176H	**264**	**60**	**Tr 380x5**	**490**	**77**	M6	3.5	7	**61.70**	HM3176	MS3176	HMV76
360	OH3276H	**310**	**60**	**Tr 380x5**	**490**	**77**	M6	3.5	7	**69.60**	HM3176	MS3176	HMV76
380	OH3980H	**168**	**52**	**Tr 400x5**	**470**	**66**	M6	3.5	7	**35.00**	HM3080	MS3080	HMV80
380	OH3080H	**210**	**52**	**Tr 400x5**	**470**	**66**	M6	3.5	7	**41.30**	HM3080	MS3080	HMV80
380	OH3180H	**272**	**62**	**Tr 400x5**	**520**	**82**	M6	3.5	7	**73.00**	HM3180	MS3180	HMV80
380	OH3280H	**328**	**62**	**Tr 400x5**	**520**	**82**	M6	3.5	7	**81.00**	HM3180	MS3180	HMV80

[1]Hydraulic adapter sleeves are supplied complete with locknuts and lockwasher or lockplates.
[2]Tr means 30°. Trapezoid thread and the digits are outside diameter of thread and pitch.
[3]Adapters with dimensions C_1 have a locking device as shown in the illustration.

Continued on next page.

METRIC OH HYDRAULIC ADAPTER SLEEVES – *continued*

- Includes sleeve, nut and lockwasher or lockplate.
- Hydraulic assistance facilitates mounting of large bearing. Oil pump required to inject pressurized oil.
- Other dimensions may be available, consult your Timken engineer.

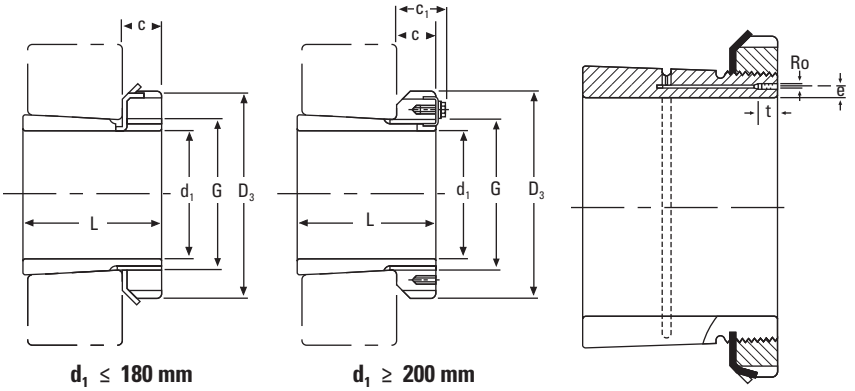

$d_1 \leq 180$ mm $d_1 \geq 200$ mm

Continued from previous page.

d_1	Sleeve Part No.[1]	L	C	Thread[2] G	D_3	C_1[3]	Ro	e	t	Weight	Locknuts	Lockwasher and Lockplate	Appropriate Hydraulic Nut
mm		mm	mm	mm	mm	mm		mm	mm	kg			
400	OH3984H	168	52	Tr 420x5	490	66	M6	3.5	7	36.60	HM3084	MS3084	HMV84
400	OH3084H	212	52	Tr 420x5	490	66	M6	3.5	7	43.70	HM3084	MS3084	HMV84
400	OH3184H	304	70	Tr 420x5	540	90	M6	3.5	7	84.20	HM3184	MS3184	HMV84
400	OH3284H	352	70	Tr 420x5	540	90	M6	3.5	7	96.00	HM3184	MS3184	HMV84
410	OH3988H	189	60	Tr 440x5	520	77	M8	6.5	12	58.00	HM3088	MS3088	HMV88
410	OH3088H	228	60	Tr 440x5	520	77	M8	6.5	12	65.20	HM3088	MS3088	HMV88
410	OH3188H	307	70	Tr 440x5	560	90	M8	6.5	12	104.00	HM3188	MS3188	HMV88
410	OH3288H	361	70	Tr 440x5	560	90	M8	6.5	12	118.00	HM3188	MS3188	HMV88
430	OH3992H	189	60	Tr 460x5	540	77	M8	6.5	12	60.00	HM3092	MS3092	HMV92
430	OH3092H	234	60	Tr 460x5	540	77	M8	6.5	12	71.00	HM3092	MS3092	HMV92
430	OH3192H	326	75	Tr 460x5	580	95	M8	6.5	12	116.00	HM3192	MS3192	HMV92
430	OH3292H	382	75	Tr 460x5	580	95	M8	6.5	12	134.00	HM3192	MS3192	HMV92
450	OH3996H	200	60	Tr 480x5	560	77	M8	6.5	12	66.00	HM3096	MS30/96	HMV96
450	OH3096H	237	60	Tr 480x5	560	77	M8	6.5	12	75.00	HM3096	MS30/96	HMV96
450	OH3196H	335	75	Tr 480x5	620	95	M8	6.5	12	135.00	HM3196	MS3196	HMV96
450	OH3296H	397	75	Tr 480x5	620	95	M8	6.5	12	153.00	HM3196	MS3196	HMV96
470	OH39/500H	208	68	Tr 500x5	580	85	M8	6.5	12	74.30	HM30/500	MS30/500	HMV100
470	OH31/500H	356	80	Tr 500x5	630	100	M8	6.5	12	145.00	HM31/500	MS31/500	HMV100
470	OH32/500H	428	80	Tr 500x5	630	100	M8	6.5	12	166.00	HM31/500	MS31/500	HMV100
500	OH39/530H	216	68	Tr 530x6	630	90	M8	6	12	87.90	HM30/530	MS30/530	HMV106
500	OH31/530H	364	80	Tr 530x6	670	105	M8	6	12	161.00	HM31/530	MS31/530	HMV106
500	OH32/530H	447	80	Tr 530x6	670	105	M8	6	12	192.00	HM31/530	MS31/530	HMV106
530	OH39/560H	227	75	Tr 560x6	650	97	M8	6	12	95.00	HM30/560	MS30/560	HMV112
530	OH31/560H	377	85	Tr 560x6	710	110	M8	6	12	185.00	HM31/560	MS31/560	HMV112
530	OH32/560H	462	85	Tr 560x6	710	110	M8	6	12	219.00	HM31/560	MS31/560	HMV112
560	OH39/600H	239	75	Tr 600x6	700	97	G1/8	8	13	127.00	HM30/600	MS30/600	HMV120
560	OH30/600H	289	75	Tr 600x6	700	97	G1/8	8	13	147.00	HM30/600	MS30/600	HMV120
560	OH31/600H	399	85	Tr 600x6	750	110	G1/8	8	13	234.00	HM31/600	MS31/600	HMV120
560	OH32/600H	487	85	Tr 600x6	750	110	G1/8	8	13	278.00	HM31/600	MS31/600	HMV120
600	OH39/630H	254	75	Tr 630x6	730	97	M8	6	12	124.00	HM30/630	MS30/630	HMV126
600	OH30/630H	301	75	Tr 630x6	730	97	M8	6	12	138.00	HM30/630	MS30/630	HMV126
600	OH31/630H	424	95	Tr 630x6	800	120	M8	6	12	254.00	HM31/630	MS31/630	HMV126
600	OH32/630H	521	95	Tr 630x6	800	120	M8	6	12	300.00	HM 31/630	MS31/630	HMV126

[1]Hydraulic adapter sleeves are supplied complete with locknuts and lockwasher or lockplates.
[2]Tr means 30°. Trapezoid thread and the digits are outside diameter of thread and pitch.
[3]Adapters with dimensions C_1 have a locking device as shown in the illustration.

Continued on next page.

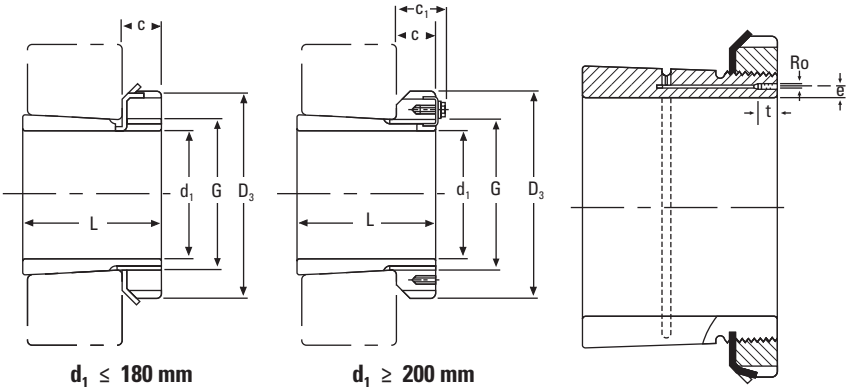

Continued from previous page.

$d_1 \leq 180$ mm **$d_1 \geq 200$ mm**

d_1	Sleeve Part No.[1]	L	C	Thread[2] G	D_3	C_1[3]	Ro	e	t	Weight	Locknuts	Lockwasher and Lockplate	Appropriate Hydraulic Nut
mm		mm	mm	mm	mm	mm		mm	mm	kg			
630	OH39/670H	264	80	Tr 670x6	780	102	G1/8	8	13	162.00	HM30/670	MS30/670	HMV134
630	OH30/670H	324	80	Tr 670x6	780	102	G1/8	8	13	190.00	HM30/670	MS30/670	HMV134
630	OH31/670H	456	106	Tr 670x6	850	131	G1/8	8	13	340.00	HM31/670	MS31/670	HMV134
630	OH32/670H	558	106	Tr 670x6	850	131	G1/8	8	13	401.00	HM31/670	MS31/670	HMV134
670	OH39/710H	286	90	Tr 710x7	830	112	G1/8	8	13	183.00	HM30/710	MS30/710	HMV142
670	OH30/710H	342	90	Tr 710x7	830	112	G1/8	8	13	228.00	HM30/710	MS30/710	HMV142
670	OH31/710H	467	106	Tr 710x7	900	135	G1/8	8	13	392.00	HM31/710	MS31/710	HMV142
670	OH32/710H	572	106	Tr 710x7	900	135	G1/8	8	13	459.00	HM31/710	MS31/710	HMV142
710	OH39/750H	291	90	Tr 750x7	870	112	G1/8	8	13	211.00	HM30/750	MS30/750	HMV150
710	OH30/750H	356	90	Tr 750x7	870	112	G1/8	8	13	246.00	HM30/750	MS30/750	HMV150
710	OH31/750H	493	112	Tr 750x7	950	141	G1/8	8	13	451.00	HM31/750	MS31/750	HMV150
710	OH32/750H	603	112	Tr 750x7	950	141	G1/8	8	13	526.00	HM31/750	MS31/750	HMV150
750	OH39/800H	303	90	Tr 800x7	920	112	G1/8	10	13	259.00	HM30/800	MS30/800	HMV160
750	OH31/800H	505	112	Tr 800x7	1000	141	G1/8	10	13	535.00	HM31/800	MS31/800	HMV160
750	OH32/800H	618	112	Tr 800x7	1000	141	G1/8	10	13	629.00	HM31/800	MS31/800	HMV160
800	OH39/850H	308	90	Tr 850x7	980	115	G1/8	10	13	288.00	HM30/850	MS30/850	HMV170
800	OH31/850H	536	118	Tr 850x7	1060	147	G1/8	10	13	616.00	HM31/850	MS31/850	HMV170
800	OH32/850H	651	118	Tr 850x7	1060	147	G1/8	10	13	722.00	HM31/850	MS31/850	HMV170
850	OH39/900H	326	100	Tr 900x7	1030	125	G1/8	10	13	330.00	HM30/900	MS30/900	HMV180
850	OH31/900H	557	125	Tr 900x7	1120	154	G1/8	10	13	677.00	HM31/900	MS31/900	HMV180
850	OH32/900H	660	125	Tr 900x7	1120	154	G1/8	10	13	776.00	HM31/900	MS31/900	HMV180
900	OH39/950H	344	100	Tr 950x8	1080	125	G1/8	10	13	362.00	HM30/950	MS30/950	HMV190
900	OH31/950H	583	125	Tr 950x8	1170	154	G1/8	10	13	738.00	HM31/950	MS31/950	HMV190
900	OH32/950H	675	125	Tr 950x8	1170	154	G1/8	10	13	834.00	HM31/950	MS31/950	HMV190
950	OH39/1000H	358	100	Tr 1000x8	1140	125	G1/8	10	13	407.00	HM30/1000	MS30/1000	HMV200
950	OH31/1000H	609	125	Tr 1000x8	1240	154	G1/8	10	13	842.00	HM31/1000	MS31/1000	HMV200
950	OH32/1000H	707	125	Tr 1000x8	1240	154	G1/8	10	13	952.00	HM31/1000	MS31/1000	HMV200
1000	OH39/1060H	372	100	Tr 1060x8	1200	125	G1/8	12	15	490.00	HM30/1060	MS30/1000	HMV212
1000	OH30/1060H	447	100	Tr 1060x8	1200	125	G1/8	12	15	571.00	HM30/1060	MS30/1000	HMV212
1000	OH31/1060H	622	125	Tr 1060x8	1300	154	G1/8	12	15	984.00	HM31/1060	MS31/1000	HMV212

[1]Hydraulic adapter sleeves are supplied complete with locknuts and lockwasher or lockplates.
[2]Tr means 30°. Trapezoid thread and the digits are outside diameter of thread and pitch.
[3]Adapters with dimensions C_1 have a locking device as shown in the illustration.

METRIC LOCKNUTS

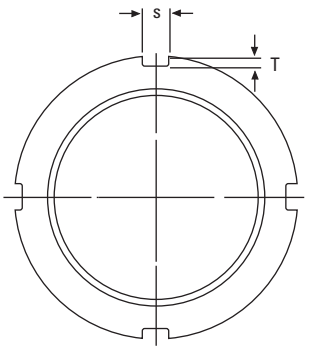

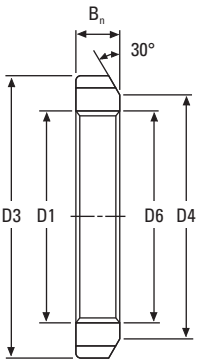

Locknut No.[1]	Thread[2] D_1	D_3	D_4	B_n	s	T	D_6	Weight	Lockwasher No.
	mm	mm	mm	mm	mm	mm	mm	kg	
KM0	M 10 X 0.75	18	13	4	3	2	10.5	0.01	MB00
KM1	M 12 X 1.0	22	17	4	3	2	12.5	0.01	MB01
KM2	M 15 X 1.0	25	21	5	4	2	15.5	0.01	MB02
KM3	M 17 X 1.0	28	24	5	4	2	17.5	0.01	MB03
KM4	M 20 X 1.0	32	26	6	4	2	20.5	0.02	MB04
KM5	M 25 X 1.5	38	32	7	5	2	25.8	0.03	MB05
KM6	M 30 X 1.5	45	38	7	5	2	30.8	0.04	MB06
KM7	M 35 X 1.5	52	44	8	5	2	35.8	0.05	MB07
KM8	M 40 X 1.5	58	50	9	6	2.5	40.8	0.09	MB08
KM9	M 45 X 1.5	65	56	10	6	2.5	45.8	0.12	MB09
KM10	M 50 X 1.5	70	61	11	6	2.5	50.8	0.15	MB10
KM11	M 55 X 2.0	75	67	11	7	3	56.0	0.16	MB11
KM12	M 60 X 2.0	80	73	11	7	3	61.0	0.17	MB12
KM13	M 65 X 2.0	85	79	12	7	3	66.0	0.20	MB13
KM14	M 70 X 2.0	92	85	12	8	3.5	71.0	0.24	MB14
KM15	M 75 X 2.0	98	90	13	8	3.5	76.0	0.29	MB15
KM16	M 80 X 2.0	105	95	15	8	3.5	81.0	0.40	MB16
KM17	M 85 X 2.0	110	102	16	8	3.5	86.0	0.45	MB17
KM18	M 90 X 2.0	120	108	16	10	4	91.0	0.56	MB18
KM19	M 95 X 2.0	125	113	17	10	4	96.0	0.66	MB19
KM20	M 100 X 2.0	130	120	18	10	4	101.0	0.70	MB20
KM21	M 105 X 2.0	140	126	18	12	5	106.0	0.85	MB21
KM22	M 110 X 2.0	145	133	19	12	5	111.0	0.97	MB22
KM23	M 115 X 2.0	150	137	19	12	5	116.0	1.01	MB23
KM24	M 120 X 2.0	160	148	21	12	5	126.0	1.80	MB24
KM25	M 125 X 2.0	160	148	21	12	5	126.0	1.19	MB25
KM26	M 130 X 2.0	165	149	21	12	5	131.0	1.25	MB26
KM27	M 135 X 2.0	175	160	22	14	6	136.0	1.55	MB27
KM28	M 140 X 2.0	180	160	22	14	6	141.0	1.56	MB28
KM29	M145 X 2.0	190	172	24	14	6	146.0	2.00	MB29

[1]No. KM0-KM40 also available in 304 stainless steel.
[2]M means metric thread and the digits are major diameter of thread and pitch.

Continued on next page.

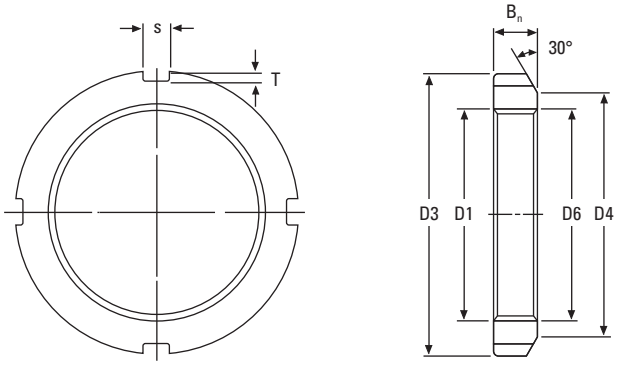

Continued from previous page.

Locknut No.[1]	Thread[2] D_1	D_3	D_4	B_n	s	T	D_6	Weight	Lockwasher No.
	mm	**mm**	**mm**	**mm**	**mm**	**mm**	**mm**	**kg**	
KM30	**M150 X 2.0**	**195**	**171**	**24**	**14**	**6**	**151.0**	**2.03**	MB30
KM31	**M155 X 3.0**	**200**	**182**	**25**	**16**	**7**	**156.5**	**2.21**	MB31
KM32	**M160 X 3.0**	**210**	**182**	**25**	**16**	**7**	**161.5**	**2.59**	MB32
KM33	**M165 X 3.0**	**210**	**193**	**26**	**16**	**7**	**166.5**	**2.43**	MB33
KM34	**M170 X 3.0**	**220**	**193**	**26**	**16**	**7**	**171.5**	**2.80**	MB34
KM36	**M180 X 3.0**	**230**	**203**	**27**	**18**	**8**	**181.5**	**3.07**	MB36
KM38	**M190 X 3.0**	**240**	**214**	**28**	**18**	**8**	**191.5**	**3.39**	MB38
KM40	**M200 X 3.0**	**250**	**226**	**29**	**18**	**8**	**201.5**	**3.69**	MB40

[1]No. KM0 - KM40 also available in 304 stainless steel.
[2]M means metric thread and the digits are major diameter of thread and pitch.

METRIC LOCKNUTS – *continued*

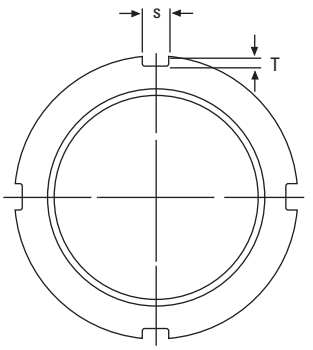

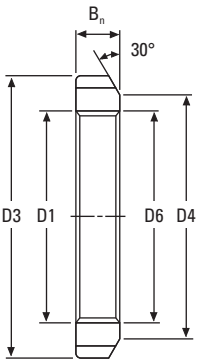

Locknut No.	Thread[1] D_1	D_3	D_4	B_n	s	T	D_6	Weight
	mm	mm	mm	mm	mm	mm	mm	kg
HM42	Tr 210 x 4	270	238	30	20	10	212	4.75
HM44	Tr 220 x 4	280	250	32	20	10	222	5.35
HM46	Tr 230 x 4	290	260	34	20	10	232	5.80
HM48	Tr 240 x 4	300	270	34	20	10	242	6.20
HM50	Tr 250 x 4	320	290	36	20	10	252	7.00
HM52	Tr 260 x 4	330	300	36	24	12	262	8.55
HM54	Tr 270 x 4	340	310	38	24	12	272	9.20
HM56	Tr 280 x 4	350	320	38	24	12	282	10.00
HM58	Tr 290 x 4	370	330	40	24	12	292	11.80
HM60	Tr 300 x 4	380	340	40	24	12	302	12.00
HM62	Tr 310 x 5	390	350	42	24	12	312.5	13.40
HM64	Tr 320 x 5	400	360	42	24	12	322.5	13.50
HM66	Tr 330 x 5	420	380	52	28	15	332.5	20.40
HM68	Tr 340 x 5	440	400	55	28	15	342.5	24.50
HM70	Tr 350 x 5	450	410	55	28	15	352.5	25.20
HM72	Tr 360 x 5	460	420	58	28	15	362.5	27.50
HM74	Tr 370 x 5	470	430	58	28	15	372.5	28.20
HM76	Tr 380 x 5	490	450	60	32	18	382.5	33.50
HM80	Tr 400 x 5	520	470	62	32	18	402.5	40.00

[1]Tr means 30°; trapezoid thread and the digits are major diameter of thread and pitch.

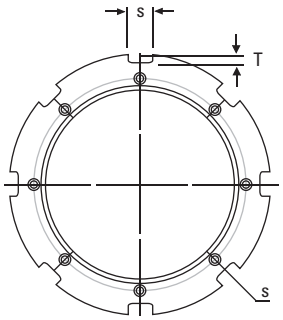

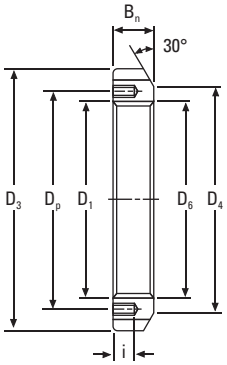

Locknut No.	Thread[1] D_1	D_3	D_4	s	T	D_6	B_n	i	Tapped Hole Threads	D_p	Appropriate Lockplate No.	Weight
	mm	mm	mm	mm	mm	mm	mm	mm		mm		kg
HM3044	Tr 220 x 4	260	242	20	9	222	30	12	M 6 x 1	229	MS3044	3.09
HM3048	Tr 240 x 4	290	270	20	10	242	34	15	M 8 x 1.25	253	MS3048	5.16
HM3052	Tr 260 x 4	310	290	20	10	262	34	15	M 8 x 1.25	273	MS3052	5.67
HM3056	Tr 280 x 4	330	310	24	10	282	38	15	M 8 x 1.25	293	MS3056	6.78
HM3060	Tr 300 x 4	360	336	24	12	302	42	15	M 8 x 1.25	316	MS3060	9.62
HM3064	Tr 320 x 5	380	356	24	12	322.5	42	15	M 8 x 1.25	335	MS3064	9.94
HM3068	Tr 340 x 5	400	376	24	12	342.5	45	15	M 8 x 1.25	355	MS3068	11.70
HM3072	Tr 360 x 5	420	394	28	13	362.5	45	15	M 8 x 1.25	374	MS3072	12.00
HM3076	Tr 380 x 5	450	422	28	14	382.5	48	18	M 10 x 1.5	398	MS3076	14.90
HM3080	Tr 400 x 5	470	442	28	14	402.5	52	18	M 10 x 1.5	418	MS3080	16.90
HM3084	Tr 420 x 5	490	462	32	14	422.5	52	18	M 10 x 1.5	438	MS3084	17.40
HM3088	Tr 440 x 5	520	490	32	15	442.5	60	21	M 12 x 1.75	462	MS3088	26.20
HM3092	Tr 460 x 5	540	510	32	15	462.5	60	21	M 12 x 1.75	482	MS3092	29.60
HM3096	Tr 480 x 5	560	530	36	15	482.5	60	21	M 12 x 1.75	502	MS3096	28.30
HM30/500	Tr 500 x 5	580	550	36	15	502.5	68	21	M 12 x 1.75	522	MS30/500	33.60

[1]Tr means 30°; trapezoid thread and the digits are major diameter of thread and pitch.

METRIC LOCKNUTS – *continued*

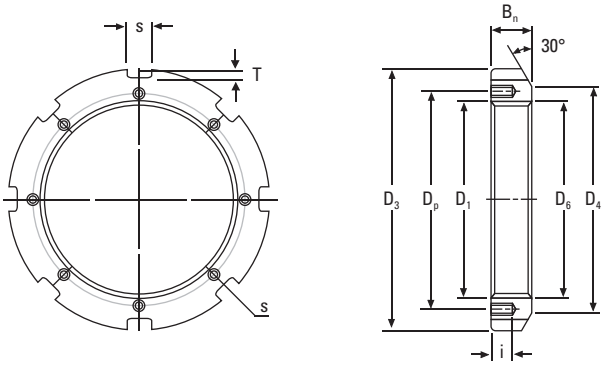

Locknut No.	Thread[1] D_1	D_3	D_4	s	T	D_6	B_n	i	Tapped Hole Threads	D_p	Appropriate Lockplate No.	Weight
	mm	mm	mm	mm	mm	mm	mm	mm		mm		kg
HM3144	**Tr 220 x 4**	**280**	**250**	**20**	**10**	**222**	**32**	**15**	M 8 x 1.25	**238**	MS3144	**5.20**
HM3148	**Tr 240 x 4**	**300**	**270**	**20**	**10**	**242**	**34**	**15**	M 8 x 1.25	**258**	MS3148	**5.95**
HM3152	**Tr 260 x 4**	**330**	**300**	**24**	**12**	**262**	**36**	**18**	M 10 x 1.5	**281**	MS3152	**8.05**
HM3156	**Tr 280 x 4**	**350**	**320**	**24**	**12**	**282**	**38**	**18**	M 10 x 1.5	**301**	MS3156	**9.05**
HM3160	**Tr 300 x 4**	**380**	**340**	**24**	**12**	**302**	**40**	**18**	M 10 x 1.5	**326**	MS3160	**11.80**
HM3164	**Tr 320 x 5**	**400**	**360**	**24**	**12**	**322.5**	**42**	**18**	M 10 x 1.5	**345**	MS3164	**13.10**
HM3168	**Tr 340 x 5**	**440**	**400**	**28**	**15**	**342.5**	**55**	**21**	M 12 x 1.75	**372**	MS3168	**23.10**
HM3172	**Tr 360 x 5**	**460**	**420**	**28**	**15**	**362.5**	**58**	**21**	M 12 x 1.75	**392**	MS3172	**25.10**
HM3176	**Tr 380 x 5**	**490**	**450**	**32**	**18**	**382.5**	**60**	**21**	M 12 x 1.75	**414**	MS3176	**30.90**
HM3180	**Tr 400 x 5**	**520**	**470**	**32**	**18**	**402.5**	**62**	**27**	M 16 x 2	**439**	MS3180	**36.90**
HM3184	**Tr 420 x 5**	**540**	**490**	**32**	**18**	**422.5**	**70**	**27**	M 16 x 2	**459**	MS3184	**43.50**
HM3188	**Tr 440 x 5**	**560**	**510**	**36**	**20**	**442.5**	**70**	**27**	M 16 x 2	**477**	MS3188	**45.30**
HM3192	**Tr 460 x 5**	**580**	**540**	**36**	**20**	**462.5**	**75**	**27**	M 16 x 2	**497**	MS3192	**50.40**
HM3196	**Tr 480 x 5**	**620**	**560**	**36**	**20**	**482.5**	**75**	**27**	M 16 x 2	**527**	MS3196	**62.20**
HM31/500	**Tr 500 x 5**	**630**	**580**	**40**	**23**	**502.5**	**80**	**27**	M 16 x 2	**539**	MS31/500	**63.30**

[1]Tr means 30°; trapezoid thread and the digits are major diameter of thread and pitch.

METRIC LOCKWASHERS

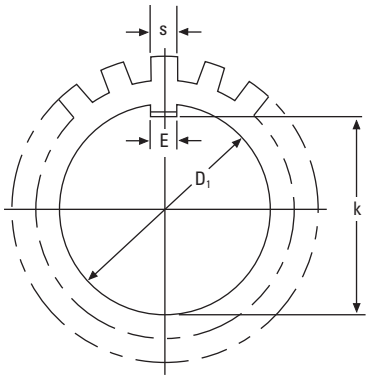

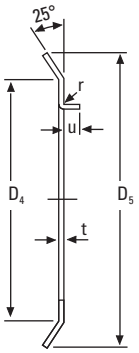

Lockwasher[1] No.	Thread D_1	k	E	t	S	D_4	D_5	r[2]	u[2]	No. of Tangs	Weight per 100 pieces	Locknut No.
	mm	mm	mm	mm	mm	mm	mm	mm	mm		kg	
MB0	10	8.5	3	1	3	13	21	0.5	2	9	0.13	KM00
MB1	12	10.5	3	1	3	17	25	0.5	2	9	0.19	KM01
MB2	15	13.5	4	1	4	21	28	1	2.5	13	0.25	KM02
MB3	17	15.5	4	1	4	24	32	1	2.5	13	0.31	KM03
MB4	20	18.5	4	1	4	26	36	1	2.5	13	0.35	KM04
MB5	25	23	5	1.2	5	32	42	1	2.5	13	0.64	KM05
MB6	30	27.5	5	1.2	5	38	49	1	2.5	13	0.78	KM06
MB7	35	32.5	6	1.2	5	44	57	1	2.5	15	1.04	KM07
MB8	40	37.5	6	1.2	6	50	62	1	2.5	15	1.23	KM08
MB9	45	42.5	6	1.2	6	56	69	1	2.5	17	1.52	KM09
MB10	50	47.5	6	1.2	6	61	74	1	2.5	17	1.60	KM10
MB11	55	52.5	8	1.2	7	67	81	1	4	17	1.96	KM11
MB12	60	57.5	8	1.5	7	73	86	1.2	4	17	2.53	KM12
MB13	65	62.5	8	1.5	7	79	92	1.2	4	19	2.90	KM13
MB14	70	66.5	8	1.5	8	85	98	1.2	4	19	3.34	KM14
MB15	75	71.5	8	1.5	8	90	104	1.2	4	19	3.56	KM15
MB16	80	76.5	10	1.8	8	95	112	1.2	4	19	4.64	KM16
MB17	85	81.5	10	1.8	8	102	119	1.2	4	19	5.24	KM17
MB18	90	86.5	10	1.8	10	108	126	1.2	4	19	6.23	KM18
MB19	95	91.5	10	1.8	10	113	133	1.2	4	19	6.70	KM19
MB20	100	96.5	12	1.8	10	120	142	1.2	6	19	7.65	KM20
MB21	105	100.5	12	1.8	12	126	145	1.2	6	19	8.26	KM21
MB22	110	105.5	12	1.8	12	133	154	1.2	6	19	9.40	KM22
MB23	115	110.5	12	2	12	137	159	1.5	6	19	10.80	KM23
MB24	120	115	14	2	12	138	164	1.5	6	19	10.50	KM24
MB25	125	120	14	2	12	148	170	1.5	6	19	11.80	KM25
MB26	130	125	14	2	12	149	175	1.5	6	19	11.30	KM26
MB27	135	130	14	2	14	160	185	1.5	6	19	14.40	KM27
MB28	140	135	16	2	14	160	192	1.5	8	19	14.20	KM28
MB29	145	140	16	2	14	171	202	1.5	8	19	16.80	KM29

[1]No. MB0-MB40 also available in 304 stainless steel.
[2]Straight tangs when t ≥ 3 mm.

Continued on next page.

METRIC LOCKWASHERS – *continued*

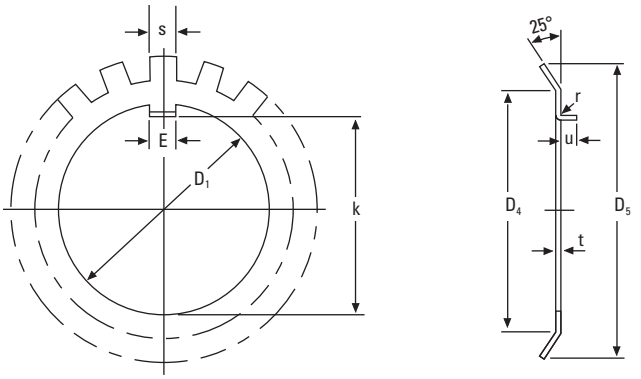

Continued from previous page.

Lockwasher[1] No.	Thread D_1	k	E	t	S	D_4	D_5	r[2]	u[2]	No. of Tangs	Weight per 100 pieces	Locknut No.
	mm	mm	mm	mm	mm	mm	mm	mm	mm		kg	
MB30	**150**	**145**	**16**	**2**	**14**	**171**	**205**	**1.5**	**8**	19	**15.50**	KM30
MB31	**155**	**147.5**	**16**	**2.5**	**16**	**182**	**212**	**1.5**	**8**	19	**20.90**	KM31
MB32	**160**	**154**	**18**	**2.5**	**18**	**182**	**217**	**1.5**	**8**	19	**22.20**	KM32
MB33	**165**	**157.5**	**18**	**2.5**	**16**	**193**	**222**	**1.5**	**8**	19	**24.10**	KM33
MB34	**170**	**164**	**18**	**2.5**	**16**	**193**	**232**	**1.5**	**8**	19	**24.70**	KM34
MB36	**180**	**174**	**20**	**2.5**	**18**	**203**	**242**	**1.5**	**8**	19	**26.80**	KM36
MB38	**190**	**184**	**20**	**2.5**	**18**	**214**	**252**	**1.5**	**8**	19	**27.80**	KM38
MB40	**200**	**194**	**20**	**2.5**	**18**	**226**	**262**	**1.5**	**8**	19	**29.30**	KM40
MB44	**220**	**213**	**24**	**3.0**	**20**	**250**	**292**	–	–	19	**48.30**	HM3144
MB48	**240**	**233**	**24**	**3.0**	**20**	**270**	**312**	–	–	19	**50.20**	HM3148
MB52	**260**	**253**	**28**	**3.0**	**24**	**300**	**342**	–	–	23	**72.90**	HM3152
MB56	**280**	**273**	**28**	**3.0**	**24**	**320**	**362**	–	–	23	**75.90**	HM3156

[1]No. MB0-MB40 also available in 304 stainless steel.
[2]Straight tangs when t ≥ 3 mm.

METRIC LOCKPLATES

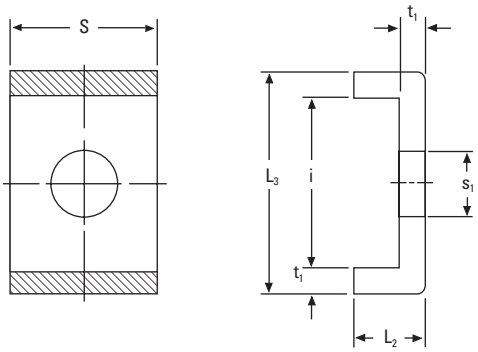

Lockplate No.	t_1	S	L_2	S_1	i	L_3	Appropriate Locknut No.	Weight per 100 pieces
	mm	mm	mm	mm	mm	mm		kg
MS3144	4	20	12	9	22.5	30.5	HM3144	2.60
MS3148	4	20	12	9	22.5	30.5	HM3148	2.60
MS3152	4	24	12	12	25.5	33.5	HM3152	3.39
MS3156	4	24	12	12	25.5	33.5	HM3156	3.39
MS3160	4	24	12	12	30.5	38.5	HM3160	3.79
MS3164	5	24	15	12	31	41	HM3164	5.35
MS3168	5	28	15	14	38	48	HM3168	6.65
MS3172	5	28	15	14	38	48	HM3172	6.65
MS3176	5	32	15	14	40	50	HM3176	7.96
MS3180	5	32	15	18	45	55	HM3180	8.20
MS3184	5	32	15	18	45	55	HM3184	8.20
MS3188	5	36	15	18	43	53	HM3188	9.00
MS3192	5	36	15	18	43	53	HM3192	9.00
MS3196	5	36	15	18	53	63	HM3196	10.40
MS31/500	5	40	15	18	45	55	HM31/500	10.50
MS3044	4	20	12	7	13.5	21.5	HM3044	2.12
MS3048	4	20	12	9	17.5	25.5	HM3048	2.29
MS3052	4	20	12	9	17.5	25.5	HM3052	2.29
MS3056	4	24	12	9	17.5	25.5	HM3056	2.92
MS3060	4	24	12	9	20.5	28.5	HM3060	3.16
MS3064	5	24	15	9	21	31	HM3064	4.56
MS3068	5	24	15	9	21	31	HM3068	4.56
MS3072	5	28	15	9	20	30	HM3072	5.03
MS3076	5	28	15	12	24	34	HM3076	5.28
MS3080	5	28	15	12	24	34	HM3080	5.28
MS3084	5	32	15	12	24	34	HM3084	6.11
MS3088	5	32	15	14	28	38	HM3088	6.45
MS3092	5	32	15	14	28	38	HM3092	6.45
MS3096	5	36	15	14	28	38	HM3096	7.29
MS30/500	5	36	15	14	28	38	HM30/500	7.29

INDEX

TIMKEN® SNT PLUMMER BLOCKS

TIMKEN

The Timken team applies their know-how to improve the reliability and performance of machinery in diverse markets worldwide. The company designs, makes and markets high-performance steel as well as mechanical components, including bearings, gears, chain and related mechanical power transmission products and services.

www.timken.com

Stronger. **Commitment.** Stronger. **Value.** Stronger. **Worldwide.** Stronger. **Together.** | Stronger. **By Design.**

Price: USD $75

TIMKEN

TIMKEN® BALL BEARING HOUSED UNIT CATALOG

TIMKEN® HOUSED UNIT CATALOG INDEX

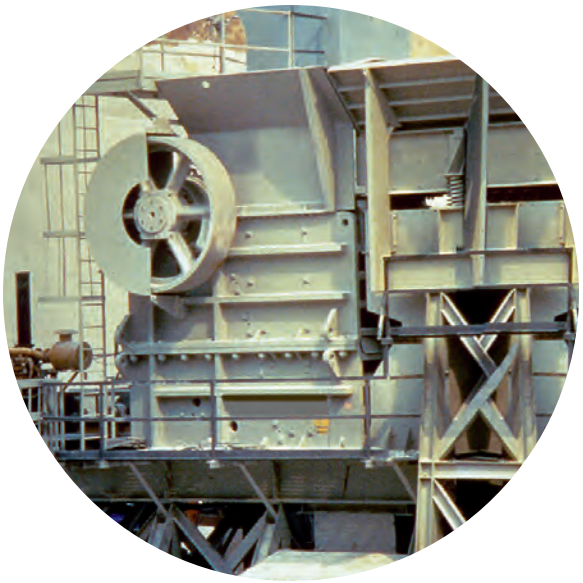

GROW STRONGER WITH TIMKEN

Every day, people around the world count on the strength of Timken. Our expertise in metallurgy, friction management and mechanical power transmission helps them accelerate improvements in productivity and uptime.

We supply products and services that can help keep your operations moving forward, whether you need drive train kits for commercial vehicles, durable housings for bearings in dirty environments, couplings that avoid metal-to-metal contact between motors and gearboxes, repair services for rail bearings, steel for an aircraft engine shaft, or other products and services for your applications.

When you choose Timken, you receive more than high-quality products and services: You gain a worldwide team of highly trained and experienced Timken people committed to working collaboratively with you to improve your business.

Globally, our 20,000 people provide reliable answers for a wide range of operations in manufacturing, mining, medical equipment, aerospace, transportation, oil and gas – and other diverse industries.

INCREASE YOUR EQUIPMENT UPTIME

In addition to high-quality bearings, engineered steel and mechanical power transmission components, we provide valuable integrated products and services. For example, we offer repair services and equipment monitoring equipment that can alert you to problems before they impact your uptime.

Additionally, we offer a broad selection of seals, premium lubricants, lubricators, couplings and chain to keep your operations moving smoothly.

Our 10 technology centers in the United States, Europe and Asia help pioneer tomorrow's innovations with extensive basic and applied scientific research programs. Through internal development and strategic acquisition of innovative companies, we continue to expand our portfolio of highly engineered bearings, steel and components.

RUGGED TIMKEN® HOUSED UNITS HELP PROTECT YOUR BEARINGS

When you choose sturdy Timken housings, your bearings can keep rolling smoothly, even in harsh environments impacted by dirt, debris, water and other contaminants. Timken engineers designed special housings to withstand tough challenges on the job.

Protected inside durable cast iron or steel, our highly engineered Timken® ball and roller bearings work hard to help you manufacture and transport materials, without excessive maintenance due to contaminants.

Choose from our selection of housed units designed with ball, tapered and spherical bearings. Select enhancements like Timken® seals, lubricants and housing covers best suited for each task. Our engineers help you choose the right combination of bearings and accessories to extend bearing life, increase uptime and reduce maintenance costs.

Of course, you can interchange existing products with Timken housed units because our bolt holes and shaft centerline dimensions are designed to conform to industry standards.

Timken® housed units reflect our strengths in metallurgy, engineering and manufacturing. We produce all our bearings in adherence with the Timken Quality Management System for consistency in all our facilities around the world.

TIMKEN® BALL HOUSED UNITS OFFER EASY INSTALLATION, FLEXIBLE OPTIONS

Timken® ball housed units, available in a variety of sizes and types, feature wide-inner-ring ball bearings that provide additional shaft support and locking options. The Timken® wide-inner-ring ball bearing is designed for straight shafts and can be positioned without shoulders, locknuts or adapters.

For easy installation, our ball housed units can be ordered pre-assembled with bearings, housings, seals and locking systems. Choose from pillow blocks, flanged cartridges, take-up units and cylindrical cartridges. Our cast-iron, pressed-steel and other optional materials give you durable choices for the exterior covers. Timken® locking options include set screws, self-locking collars and concentric collars.

Timken® Shaft Guarding Technology™ deters set-screw damage to shafts by placing a hardened band in the groove along the inner ring of the bearing. The set screws press against the band to transfer gripping pressure onto the shaft, preventing nicks, as well as raised-metal or permanent shaft damage. The stainless-steel band resists corrosion on the shaft. This system is particularly helpful for applications where it would be expensive and time-consuming to replace shafts.

TYPICAL INDUSTRIES AND APPLICATIONS

Use Timken ball bearing housed units in agricultural applications, fans, blowers, food processing devices and conveyors.

TIMKEN® TYPE E HOUSED UNITS REPEL CONTAMINANTS, ENHANCE PERFORMANCE

Timken® Type E tapered roller bearing housed units feature double-lip seals and locking collars that protect against water and other contaminants. This double-lip seal design blocks debris and retains grease better than single-lip or triple-lip seals, according to Timken 2012 laboratory tests.

Its cast-iron exterior includes a corrosion-resistant electro-coat finish for the housing and collar, a more durable shield than industry-standard powder coating or black oxide. Set screws with nylon patches reduce back-out, even in rigorous applications.

Premium Timken® tapered roller bearings inside Type E housings are manufactured with advanced technology that results in longer predicted useful bearing life than other housed units with standard bearings. Designed with optimized bearing profiles and improved surface finishes, Timken tapered roller bearings operate efficiently within the housing.

TYPICAL INDUSTRIES AND APPLICATIONS

Use Timken Type E housings for pulp and paper, power generation, mining, cement and aggregate industries. Our Type E housed units also are widely used in equipment for air-handling and treatment of water and waste water. Other common machine applications include mixers, washers, shredders, mills and oven/furnace roller beds.

TIMKEN® SPHERICAL ROLLER BEARING SOLID-BLOCK HOUSED UNITS WITHSTAND HARSH CONDITIONS

Timken® spherical roller bearing solid-block housed units stand up to rugged conditions. Composed of solid steel, they withstand most falling debris and handle up to ±1.5 degrees of misalignment. The steel used in these products is up to two times stronger than cast iron, which may break or pound out in tough applications.

Timken spherical roller bearing solid-block housed units come in five locking configurations: single and double set screws, eccentric locks for reversing applications, tapered-adaptor locks and double-tapered locks.

Choose from three sealing options: labyrinth seals (for high-speed, high-temperature applications) and triple-lip seals made of either nitrile or urethane. Timken® steel auxiliary covers provide an extra layer of protection, and they can be filled with Timken lubricants.

TYPICAL INDUSTRIES AND APPLICATIONS

Use Timken spherical roller bearing solid-block housed units in metals mills, aggregate and cement, mining, power generation, agriculture, pulp, paper, sawmills and other forest industries.

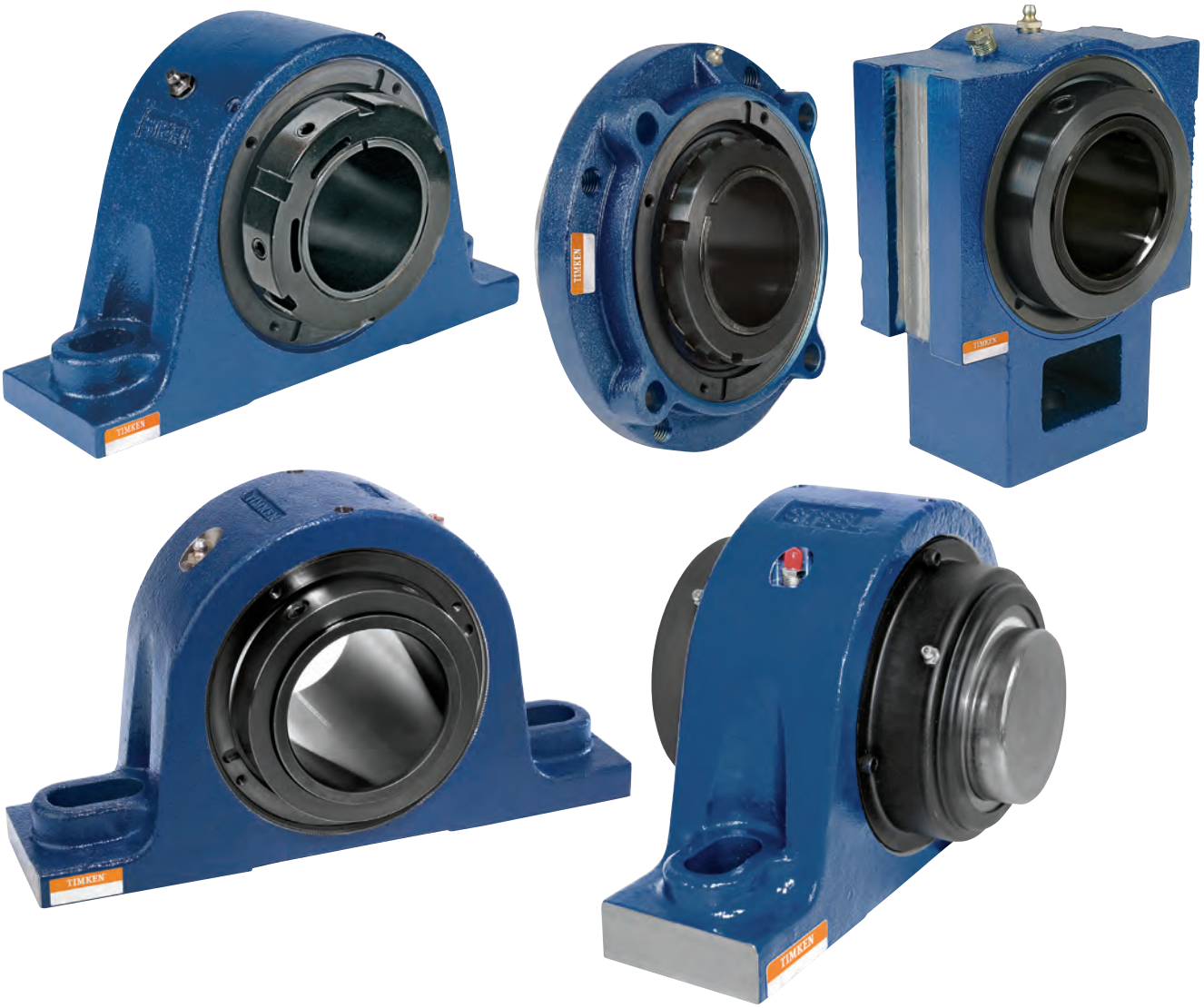

TIMKEN® SAF SPLIT-BLOCK HOUSED UNITS BEAR HEAVY LOADS

Timken® SAF split-block housed units are available in rugged cast iron, ductile iron or cast steel to match a range of industrial environments. Our Timken SAF housed units have separate, matched caps and bases. In larger sizes where housed units are heavier, this split-block design eases installation. Remove the cap using a pry-tool slot for bearing inspection, service and replacement.

Available in a variety of shaft sizes, Timken SAF units offer the choice of tapered-bore design for easy mounting or a straight-bore design for better axial location. The block can be converted from fixed to float by removing the stabilizing ring. Several sealing options protect against contamination, including a standard seal, which is a precision aluminum triple-ring labyrinth seal.

TYPICAL INDUSTRIES AND APPLICATIONS

Use Timken SAF housed bearings in power generation, coal, mining, aggregate, cement, metals, pulp, paper and other forestry operations, water treatment and food processing industries. Applications include warehousing, conveyors, movable bridges/heavy structures, industrial fans and blowers.

TIMKEN® SNT SPLIT PLUMMER BLOCKS CARRY HEAVY LOADS

Timken® SNT split plummer blocks are available in metric sizes. Their rugged cast iron, ductile iron or cast steel designs stand up to a range of industrial environments. Our Timken SNT plummer blocks have separate, matched caps and bases. In larger sizes where plummer blocks are heavier, this split-block design eases installation. Remove the cap using a pry-tool slot for bearing inspection, service and replacement.

Available in a variety of metric shaft sizes, Timken SNT plummer block units offer the choice of tapered-bore design for easy mounting or straight-bore design for better axial location. The block can be converted from fixed to float by adding or removing the locating rings. A variety of sealing options help protect against contamination including all-purpose elastomer seals, deflection-type V-ring seals, precision labyrinth seals and heavy-duty taconite seals for highly contaminated environments.

TYPICAL INDUSTRIES AND APPLICATIONS

Use Timken SNT plummer blocks in power generation (coal), mining, aggregate, cement, metals, pulp, paper and other forestry operations, water treatment and food processing industries. Applications include warehousing, conveyors, bulk material handling and industrial fans and blowers.

HOW TO USE THIS CATALOG

We designed this catalog to help you find the Timken housed units best suited to your specifications.

Timken offers an extensive range of bearings and accessories in both imperial and metric sizes. For your convenience, size ranges are indicated in millimeters and inches. Contact your Timken engineer to learn more about our complete line for the special needs of your application.

This publication contains dimensions, tolerances and load ratings, as well as engineering sections describing fitting practices for shafts and housings, internal clearances, materials and other bearing features. It provides valuable assistance in the initial consideration of the type and characteristics of the bearings that may best suit your particular needs.

ISO and ANSI/ABMA, as used in this publication, refer to the International Organization for Standardization and the American National Standards Institute/American Bearing Manufacturers Association.

Updates are made periodically to this catalog. Visit www.timken.com for the most recent version of the Timken® Housed Unit Catalog.

DISCLAIMER

This catalog is provided solely to give you analysis tools and data to assist you in your product selection. Product performance is affected by many factors beyond the control of Timken. Therefore, you must validate the suitability and feasibility of all product selections for your applications.

Timken products are sold subject to Timken terms and conditions of sale, which include our limited warranty and remedy. You can find these at http://www.timken.com/en-us/purchase/Pages/TermsandConditionsofSale.aspx.

Please consult with your Timken engineer for more information and assistance.

Every reasonable effort has been made to ensure the accuracy of the information in this writing, but no liability is accepted for errors, omissions or for any other reason.

SHELF LIFE AND STORAGE OF GREASE-LUBRICATED BEARINGS AND COMPONENTS

To help you get the most value from our products, Timken provides guidelines for the shelf life of grease-lubricated ball and roller bearings, components and assemblies. Shelf life information is based on Timken and industry test data and experience.

SHELF LIFE POLICY

Shelf life should be distinguished from lubricated bearing/component design life as follows:

- Shelf life of the grease-lubricated bearing/component represents the period of time prior to use or installation.
- The shelf life is a portion of the anticipated aggregate design life. It is impossible to accurately predict design life due to variations in lubricant bleed rates, oil migration, operating conditions, installation conditions, temperature, humidity and extended storage.
- Shelf life values, available from Timken, represent a maximum limit and assume adherence to the storage and handling guidelines suggested in this catalog or by a Timken associate. Deviations from the Timken storage and handling guidelines may reduce shelf life. Any specification or operating practice that defines a shorter shelf life should be used.

Timken cannot anticipate the performance of the grease lubricant after the bearing or component is installed or placed in service.

TIMKEN IS NOT RESPONSIBLE FOR THE SHELF LIFE OF ANY BEARING/COMPONENT LUBRICATED BY ANOTHER PARTY.

European REACH Compliance

Timken lubricants, greases and similar products sold in standalone containers or delivery systems are subject to the European REACH (**R**egistration, **E**valuation, **A**uthorization and Restriction of **CH**emicals) directive. For import into the European Union, Timken can sell and provide only those lubricants and greases that are registered with ECHA (**E**uropean **CH**emical **A**gency). For further information, please contact your Timken engineer.

STORAGE

Timken suggests the following storage guidelines for our finished products (bearings, components and assemblies, referred to as "products"):

- Unless directed otherwise by Timken, products should be kept in their original packaging until they are ready to be placed into service.
- Do not remove or alter any labels or stencil markings on the packaging.
- Products should be stored in such a way that the packaging is not pierced, crushed or otherwise damaged.
- After a product is removed from its packaging, it should be placed into service as soon as possible.
- When removing a product that is not individually packaged from a bulk pack container, the container should be resealed immediately after the product is removed.

- Do not use product that has exceeded its shelf life as defined in the Timken shelf life guidelines statement.
- The storage area temperature should be maintained between 0° C (32° F) and 40° C (104° F); temperature fluctuations should be minimized.
- The relative humidity should be maintained below 60 percent and the surfaces should be dry.
- The storage area should be kept free from airborne contaminants such as, but not limited to, dust, dirt, harmful vapors, etc.
- The storage area should be isolated from undue vibration.
- Extreme conditions of any kind should be avoided.

Due to the fact that Timken is not familiar with your particular storage conditions, we strongly suggest following these guidelines. However, you may be required by circumstances or applicable government requirements to adhere to stricter storage requirements.

Most bearing components typically ship protected with a corrosion-preventive compound that is not a lubricant. These components may be used in oil-lubricated applications without removal of the corrosion-preventive compound. When using some specialized grease lubrications, we advise you to remove the corrosion-preventive compound before packing the bearing components with suitable grease.

We pre-pack most housed unit types in this catalog with general-purpose grease suitable for their normal applications. It may be necessary for you to frequently replenish the grease for optimum performance.

Be careful in selecting lubrication, however, since different lubricants are often incompatible. You may order housed units pre-lubricated with a specified lubrication.

When you receive a bearing or housed unit shipment, do not remove products from their packaging until they are ready for mounting so they do not become corroded or contaminated.

Store bearings and housed units in an appropriate atmosphere so they remain protected for the intended period.

WARNING

Failure to observe the following warnings could create a risk of death or serious injury.

Proper maintenance and handling practices are critical. Failure to follow selection recommendations and installation instructions and to maintain proper lubrication can result in equipment failure.

Overheated bearings can ignite explosive atmospheres. Special care must be taken to properly select, install, maintain, and lubricate housed unit bearings that are used in or near atmospheres that may contain explosive levels of combustible gases or accumulations of dust such from grain, coal, or other combustible materials. Consult your equipment designer or supplier for installation and maintenance instructions.

If hammer and bar are used for installation or removal of a part, use a mild steel bar (e.g., 1010 or 1020 grade). Mild steel bars are less likely to cause release of high-speed fragments from the hammer, bar or the part being removed.

CAUTION

Failure to follow these cautions may result in property damage.

Do not use damaged housed units.

Warnings for this product line are in this catalog and posted on www.timken.com/warnings.

NOTE

Do not use excessive force when mounting or dismounting the unit.

Follow all tolerance, fit, and torque recommendations.

Always follow the Original Equipment Manufacturer's installation and maintenance guidelines.

Ensure proper alignment.

Never weld housed units.

Do not heat components with an open flame.

Do not operate at bearing temperatures above 121° C (250° F).

A

BALL BEARING HOUSED UNITS

Timken® ball bearing housed units feature a wide-inner-ring ball bearing for additional shaft support. Designed for mounting on straight shafts with a slip fit, these housed units are available in an extensive array of types and sizes to accommodate many industrial applications.

When set screws are used, Timken suggests using Shaft Guarding Technology™, a stainless-steel, hardened band that is inserted in a groove on the inner ring. When the set screws are tightened, they press against the band, tightening the grip on the shaft. Unlike traditional set screws, which can dig into the shaft, there are no nicks, raised metal or permanent shaft damage. The stainless band resists the formation of corrosion on the shaft.

Updates are made periodically to this catalog. Visit www.timken.com for the most recent version of the Timken® Housed Unit Catalog.

TYPICAL INDUSTRIES AND APPLICATIONS

Common industries and applications include agriculture, food processing, fans, blowers, and conveyors.

ENGINEERING

Antifriction bearings possess capabilities involving broad ranges of speed and many combinations of radial and thrust loads. Other important environmental conditions, such as low and high temperatures, dust and dirt, moisture and unusual conditions, affect bearing operation.

This engineering section is not intended to be comprehensive, but it does serve as a useful guide in bearing selection. Where more complex bearing applications are involved, contact your Timken engineer.

To view the complete engineering catalog, please visit www.timken.com. To order the catalog, please contact your Timken engineer and request a copy of the Timken Engineering Manual, order number 10424.

The following topics are covered within this section:

MATERIALS

TEMPERATURE RANGES, RESISTANCE TO CORROSION AND OTHER OPERATING ENVIRONMENTS

To accommodate the needs of the rapidly expanding industrial world, the capability of bearings in various extreme environments becomes vitally important. No general recommendations can be made to cover all such applications. Each installation must be studied to determine peak and average operating temperatures, length of time at these temperatures, load, oscillation or rotation, and any other factors affecting bearing operation.

RINGS, BALLS AND ROLLERS

Suggested materials for use in rings, balls and rollers at various operating temperatures together with data on chemical composition, hardness and dimensional stability are listed in table A-1 on page A-5. A temperature of 427° C (800° F) is generally the upper limit for successful bearing operating steels. Above 427° C (800° F), or below where lubricant is not permitted, cast or wrought-cobalt alloys are generally used. Although chosen primarily for their good retention of physical properties, they also possess good oxidation resistance at elevated temperatures.

CAGES, SHIELDS AND SEALS

Recommended materials for cages, shields and seals with their temperature capabilities are in table A-3 on page A-7.

DIMENSIONAL STABILITY

Dimensional stability of rings and balls is achieved by tempering the hardened steel until any further growth by transformation of austenite to martensite is balanced by shrinkage from tempering martensite. This balance is never perfect, and some size change will always occur. The amount depends upon the operating time and temperature of the bearings and the composition of and heat-treatment of the steel. The American Bearings Manufacturers Association (ABMA) definition for stabilized rings and balls permits a change of less than 0.0001 inch per inch after exposure to a temperature of 149° C (300° F) for 2500 hours. Rings and balls used at elevated temperatures are defined as stable by ABMA where there is a size change of less than 0.00015 inch per inch after 1500 hours of exposure at temperatures of 232° C, 316° C and 427° C (450° F, 600° F and 800° F).

CORROSION RESISTANCE

Timken developed a premium coating named TDC™ (thin-dense chrome), which has excellent corrosion resistance, as well as other properties leading to improved bearing life. TDC-coated bearings are intended for use in applications where unprotected bearings do not survive. This proprietary coating, emanating from years of research and testing, is a real problem-solver.

Besides its corrosion resistance feature, this coating has a high hardness (HRC 70-72), reduced coefficient of friction and a dense modular texture.

TDC is resistant to most organic and inorganic compounds. The normal thin coating of less than 0.003 mm (0.0001 in.) will outlast 440C stainless steel. The very high hardness, lower coefficient of friction and surface texture provide extra resistance to wear under less-than-ideal lubrication and thus longer bearing life.

Under normal lubrication conditions, TDC-coated races can provide fatigue life that's two times longer than the life of standard bearings.

To order wide-inner-ring ball bearings with TDC-coated races, stainless-steel balls and nylon retainers, specify suffix TDC or TDCF, which includes food safe grease (i.e., G1100KRRB + COL TDCF). This coating also can be readily applied to various types of tapered, cylindrical and spherical roller bearings.

To ensure proper application of TDC, contact your Timken engineer.

In addition to the bearings mentioned above, Timken is able to supply specially coated housing for applications involving particularly harsh environments where Food and Drug Administration (FDA) and United States Department of Agriculture (USDA) regulations apply. These housings, named Survivor® are available as electroless nickel-plated or polymer depending on the situation. The electroless nickel units are required for food processing, medical and other applications and may be ordered by adding an -NT suffix to the part number. The polymer units are similar to the NT units but offer superior protection against corrosion. Add the suffix -PT to the part when ordering.

Both coatings offer excellent protection to a broad variety of corrosive environments and are vulnerable only to a very few aggressive materials.

A complete review of operating conditions is essential before specifying corrosion-resistance housed units and/or thin-dense chrome (TDC) coated bearings. Consult your Timken engineer for comprehensive recommendations.

OTHER CONSIDERATIONS

Installations that operate at high temperatures for extended periods may lose the quality of shaft and housing fits. Carefully machined and heat-treated shafts and housings will minimize trouble from this source.

In some applications, the internal clearance of bearings may be partially absorbed. For example, during the first few seconds of rotation, a massive housing may keep the outer race cooler than the inner race and balls, even if the housing is already at some elevated temperature. Also, during heat soakback, when rotation stops, heat may flow back to the bearing along the shaft. If, while stationary, the effects of heat soakback nullify the radial internal clearance, radial brinelling of the races may occur and the bearing will be rough during subsequent rotation. Bearings with greater internal looseness may be required to compensate for these conditions. Consult your Timken engineer for recommendations.

This table provides standard operating temperatures for common bearing component materials. It should be used for reference purposes only. Other bearing component materials are available on request.

Contact your Timken engineer for further information.

TABLE A-1. OPERATING TEMPERATURES FOR BEARING COMPONENT MATERIALS – RINGS, BALLS AND ROLLERS

Material	Approximate Chemical Analysis %	Temp. °C, (°F)	Hardness HRC	-73° C -100° F	-54° C -65° F	-17° C 0° F	38° C 100° F	93° C 200° F	121° C 250° F	149° C 300° F	204° C 400° F	260° C 500° F	316° C 600° F	371° C 700° F	427° C 800° F
Low-alloy carbon-chromium bearing steels. 52100 and others per ASTM A295	1C 0.5 – 1.5Cr 0.35Mn	**21** (70)	60		STANDARD DIMENSIONAL STABILIZATION <0.0001 in./in dimensional change in 2500 hours at 100° C (212° F). Good oxidation resistance.										
Low-alloy carbon-chromium bearing steels. 52100 and others per ASTM A295	1C 0.5 – 1.5Cr 0.35Mn	**21** (70) **177** (350) **232** (450)	58 56 54	Heat stabilized per FS136. When given a stabilizing heat treatment, A295 steel is suitable for many applications in the 177°–232° C (350°–450° F) range; however, it is not as stable dimensionally as it is at temperatures below 177° C (350° F). If utmost stability is required, use materials in the 316° C (600° F) group below.											
Deep-hardening steels for heavy sections per ASTM A485	1C 1 – 1.8Cr 1 – 1.5Mn .06Si	**21** (70) **232** (450) **316** (600)	58 55 52	After heat-treated and tempered, it is stabilized.											
Carburizing steels per ASTM A534 a) low alloy 4118, 8X19, 5019, 8620 (Ni-Moly grades) b) high nickel 3310	Ni-Moly: 0.2C, 0.4-2.0Mn, 0.3-0.8Cr, 0-2.0Ni, 0-0.3Mo .0.1C, 1.5Cr, 0.4Mn, 3.5Ni	**21** (70)	58		Nickel-Moly grades of steel frequently used to achieve extra ductility in inner rings for locking device bearings. 3311 and others used for extra-thick-section rings.										
Corrosion-resistant 440C stainless steel per ASTM A756	1C 18Cr	**21** (70)	58		Excellent corrosion resistance.										
Corrosion-resistant 440C stainless steel per ASTM A756	1C 18Cr	**21** (70) **232** (450) **316** (600)	58 55 52	Heat stabilized for maximum hardness at high temperatures (FS238). Good oxidation resistance at higher temperatures. Note load capacity drops off more rapidly at higher temperatures than M50 shown below, which should be considered if loads are high.											
M-50 medium high speed	4Cr 4Mo 1V 0.8C	**21** (70) **232** (450) **316** (600)	60 59 57	Suggested where stable high hardness at elevated temperature is required.											

NOTE: Bearings have been made of special material for operation at temperatures above 427° C (800° F). Consult your Timken engineer regarding the application. ASTM A295 bearing steels are suitable for many applications up to 212° C (413° F) but are not as dimensionally stable as they are at the temperatures below 100° C (212° F).

INTERNAL CLEARANCE

RADIAL INTERNAL CLEARANCE

The radial internal clearance of radial contact ball bearings can be defined as the average outer ring raceway diameter minus the average inner ring raceway diameter minus twice the ball diameter.

RADIAL BALL BEARINGS

While manufacturing ball bearings, it is standard practice to assemble rings and balls with a specified internal clearance (table A-2). This characteristic is necessary to absorb the effect of press fitting the bearing rings at mounting.

Internal clearance is sometimes utilized to compensate for thermal expansion of bearings, shafts and housings, or to provide a contact angle in the bearing after mounting.

Internal clearance can be measured by gaging either radially or axially.

Radial measurement is accepted as the more significant characteristic because it is more directly related to shaft and housing fits. It also is the method prescribed by the American Bearing Manufacturers Association (ABMA).

Radial internal clearance can be measured mechanically by moving the outer ring horizontally, as shown in fig. A-1. The total movement of the outer ring when the balls are properly seated in the raceways determines the radial internal clearance. Several readings should be taken using different circumferential orientations of the rings to get a comprehensive average reading.

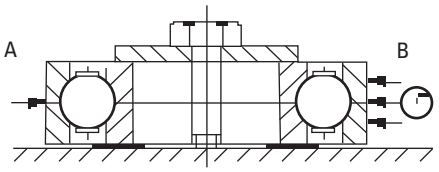

Fig. A-1. Radial internal clearance. A and B are applied forces.

TABLE A-2. LIMITS FOR RADIAL INTERNAL CLEARANCE OF SINGLE-ROW RADIAL CONTACT BALL BEARINGS UNDER NO LOAD (APPLIES TO BEARINGS OF ABEC1 AND ABEC3 TOLERANCES)

All tolerances in micrometers (µm) and ten-thousandths inches (0.0001 in.)

Timken Prefix (ABMA designation) Basic Bore Dia.		H (C2) Acceptance Limits		R (C0) Acceptance Limits[1]		P (C3) Acceptance Limits[1]		J (C4) Acceptance Limits		JJ (C5) Acceptance Limits	
Over	Incl.	Low	High	Low	High	Low	High	Low	High	Low	High
mm	mm	µm in.	µm in.	µm in.	µm in.	µm in.	µm in.	µm in.	µm in.	µm in.	µm in.
2.5	**10**	**0**	**7**	**2**	**13**	**8**	**23**	**14**	**29**	**20**	**37**
		0	3	1	5	3	9	6	11	8	15
10	**18**	**0**	**9**	**3**	**18**	**11**	**25**	**18**	**33**	**25**	**45**
		0	3.5	1	7	4	10	7	13	10	18
18	**24**	**0**	**10**	**5**	**20**	**13**	**28**	**20**	**36**	**28**	**48**
		0	4	2	8	5	11	8	14	11	19
24	**30**	**1**	**11**	**5**	**20**	**13**	**28**	**23**	**41**	**30**	**53**
		0.5	4.5	2	8	5	11	9	16	12	21
30	**40**	**1**	**11**	**6**	**20**	**15**	**33**	**28**	**46**	**40**	**64**
		0.5	4.5	2	8	6	13	11	18	16	25
40	**50**	**1**	**11**	**6**	**23**	**18**	**36**	**30**	**51**	**45**	**73**
		0.5	4.5	2.5	9	7	14	12	20	18	29
50	**65**	**1**	**15**	**8**	**28**	**23**	**43**	**38**	**61**	**55**	**90**
		0.5	6	3.5	11	9	17	15	24	22	35
65	**80**	**1**	**15**	**10**	**30**	**25**	**51**	**46**	**71**	**65**	**105**
		0.5	6	4	12	10	20	18	28	26	41
80	**100**	**1**	**18**	**12**	**36**	**30**	**58**	**53**	**84**	**75**	**120**
		0.5	7	4.5	14	12	23	21	33	30	47
100	**120**	**2**	**20**	**15**	**41**	**36**	**66**	**61**	**97**	**90**	**140**
		1	8	6	16	14	26	24	38	35	55
120	**140**	**2**	**23**	**18**	**48**	**41**	**81**	**71**	**114**	**105**	**160**
		1	9	7	19	16	32	28	45	41	63
140	**160**	**2**	**23**	**18**	**53**	**46**	**91**	**81**	**130**	**120**	**180**
		1	9	7	21	18	36	32	51	47	71
160	**180**	**2**	**25**	**20**	**61**	**53**	**102**	**91**	**147**	**135**	**200**
		1	10	8	24	21	40	36	58	53	79
180	**200**	**2**	**30**	**25**	**71**	**63**	**117**	**107**	**163**	**150**	**230**
		1	12	10	28	25	46	42	64	59	91
200	**240**	**3**	**36**	**30**	**81**	**74**	**137**	**127**	**193**	**183**	**267**
		1	14	12	32	29	54	50	76	72	105
240	**280**	**3**	**41**	**33**	**97**	**86**	**157**	**147**	**224**	**213**	**310**
		1	16	13	38	34	62	58	88	84	122
280	**320**	**5**	**48**	**41**	**114**	**104**	**180**	**170**	**257**	**246**	**353**
		2	19	16	45	41	71	67	101	97	139
320	**370**	**5**	**53**	**46**	**127**	**117**	**208**	**198**	**295**	**284**	**409**
		2	21	18	50	46	82	78	116	112	161
370	**430**	**8**	**64**	**56**	**147**	**137**	**241**	**231**	**340**	**330**	**475**
		3	25	22	58	54	95	91	134	130	187
430	**500**	**10**	**74**	**66**	**170**	**160**	**279**	**269**	**396**	**386**	**551**
		4	29	26	67	63	110	106	156	152	217
500	**570**	**10**	**81**	**74**	**193**	**183**	**318**	**307**	**450**	**439**	**630**
		4	32	29	76	72	125	121	177	173	248
570	**640**	**13**	**91**	**85**	**216**	**206**	**356**	**345**	**505**	**495**	**706**
		5	36	33	85	81	140	136	199	195	278
640	**710**	**20**	**114**	**107**	**239**	**229**	**394**	**384**	**564**	**554**	**780**
		8	45	42	94	90	155	151	222	218	307
710	**800**	**20**	**140**	**130**	**269**	**259**	**445**	**434**	**630**	**620**	**879**
		8	55	51	106	102	175	171	248	244	346
800	**1060**	**28**	**211**	**201**	**353**	**345**	**587**	**577**	**833**	**823**	**1148**
		11	83	79	139	136	231	227	328	324	452

[1]Standard fits for Timken® radial ball bearings. P(C3) for bearing O.D. greater than 52 mm (greater than 25 mm bore).

CAGES

Cages (also referred to as rolling-element retainers) serve several purposes in the proper operation of a rolling-element bearing. Cages separate the rolling elements and prevent rolling-element-on-rolling-element contact and wear. Cages serve to maintain rolling-element spacing in the races of the inner and outer rings of the bearings as the rolling elements pass into and out of the load zones. For handling purposes, cages also can retain the rolling elements on the inner ring assembly to allow for bearing installation.

To meet the needs of the various service requirements of customers, Timken offers two reliable cage types for wide-inner-ring ball bearings – pressed-steel welded cages and molded-nylon finger-type cages.

PRESSED-STEEL WELDED CAGES

This cage type consists of two formed cage halves welded together (fig. A-2). This type of cage is standard for most radial non-filling-slot ball bearings, providing high strength and rigidity, as well as good uniformity of ball-to-pocket clearance. It is suitable for very high-temperature applications, but does not accommodate application misalignment.

Fig. A-2. Pressed-steel welded cage.

MOLDED-NYLON FINGER-TYPE CAGES

This type of cage consists of a one-piece molded design (fig. A-3). Rolling elements simply snap into place. Used in the majority of wide-inner-ring ball bearings, these cages are molded of nylon 6/6 that is heat-stabilized and moisture-conditioned. The polymer can withstand continuous operating temperatures up to 120° C (250° F) with spikes up to 150° C (300° F) and provides a non-corrosive, self-lubricating material with good resistance to abrasion, wear, most solvents, oils and greases. This cage type can accommodate application misalignment.

Care needs to be exercised when using aggressive lubricants with extreme-pressure (EP) additives in combination with elevated temperatures greater than 107° C (225° F).

Fig. A-3. Molded-nylon cage.

TABLE A-3. OPERATING TEMPERATURES FOR BEARING COMPONENT MATERIALS – CAGES, SHIELDS AND SEALS

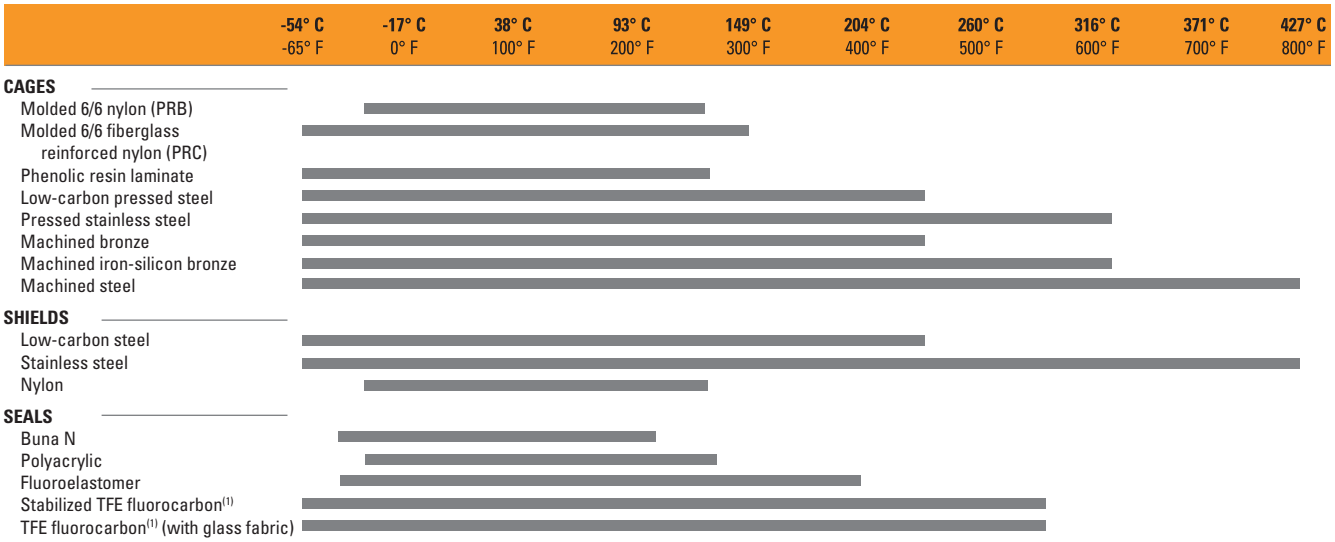

(1)Limited life above these temperatures.

LUBRICATION

SPEED CAPABILITY

There is no precise method for determining the maximum speed at which a ball bearing may operate. Bearing characteristics and features of surrounding parts, shafts, housings and other components, as well as basic service conditions, are all variables that are dependent upon each other for continued satisfactory high-speed performance.

The safe operating speed of a ball bearing is often limited by the temperature within the bearing, which, in turn, is dependent upon the temperature surrounding the application, bearing seals, shaft and housing tolerances, auxiliary parts, etc., and the type and amount of lubricant.

Although the speed values shown in the table A-4 are based on many years of research and accumulated data, numerous bearing applications successfully operate with speed ratings in excess of those tabulated. Such applications should be reviewed by your Timken engineer.

The values in the following table may be used as a general guide for determining the safe maximum speed of standard types of wide-inner-ring ball bearings. To obtain the speed rating for any bearing size with inner ring rotation, multiply the bore in millimeters of the basic size bearing by the speed in revolutions per minute.

TABLE A-4. MAXIMUM OPERATING SPEED RECOMMENDATIONS

Timken Series	Maximum dN Values
Industrial Duty	
R series	175000
Y series	175000
Medium Y series	175000
Special Duty	
R-NT series	175000
SAL and SAOL series	275000
RAKH and RAKHL series	175000
Severe Duty	
R-PT series	175000
Y-PT series	175000
L series	250000
T series	500 RPM maximum[1]
Standard Duty	
V series	140000
S series	140000

[1]Please contact your Timken engineer for applications where speeds may exceed 500 RPM.

Example:

Find the maximum operating speed for an LAK1 pillow block.

1. Find the maximum dN value for an LAK1 from the above table.
   250000
2. Find the bore of an LAK1 in millimeter.
   1 in. = 25.4 mm
3. Apply the dN equation.
   dN max. = bearing bore (in.mm) x max. operating speed
   250000 = 25.4 x maximum operating speed
   Max. operating speed = 250000/25.4 = 9840 RPM

Thus, the maximum operating speed for an LAK1 is 9840 RPM.

LUBRICANT SELECTION

The successful application of lubricating fluids on bearings depends on the physical and chemical properties of the lubricant as they pertain to the bearing, its application, installation and general environmental factors.

VISCOSITY

Generally, the most important single property of a lubricating fluid is its viscosity. Viscosity is the measure of the relative resistance of a fluid to flow and is a function of speed and temperature (fig. A-4).

The measurement of viscosity can be made by several different instruments called viscosimeters. A common unit of measure is the Saybolt Universal Second (SUS). This is the time, in seconds, required for 60 cc of a fluid to flow through a standardized orifice under a standard head, at a given temperature. The common temperatures for reporting viscosity are 37.78° C to 98.89° C (100° F to 210° F). The higher the viscosity number, the greater the resistance to flow.

Experience indicates that a lubricating fluid with a viscosity of at least 100 SUS at the operating temperature of the application will be adequate for normal bearing lubrication.

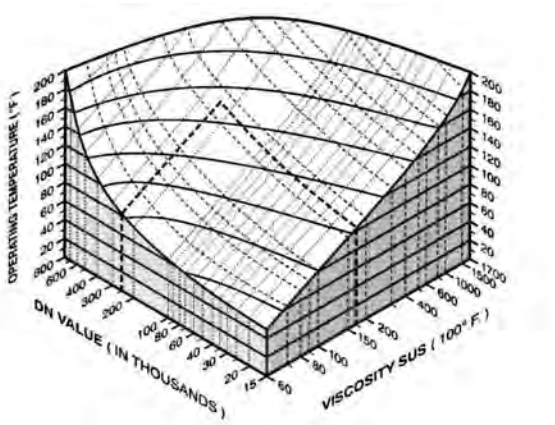

Fig. A-4. Lubrication selection as a function of bearing dN and operating speed.

VISCOSITY INDEX

The ideal oil (as far as viscosity is concerned) would be the same viscosity at all temperatures. All oils become less viscous (thin-out) when heated and more viscous (thickened) when cooled.

However, oils do not vary in viscosity to the same extent. Some thicken or thin more rapidly than others.

The term viscosity index, or VI, is used to rate oils according to their temperature-viscosity behavior.

Oils with the highest viscosity index are more resistant to changes in viscosity with changes in temperature than lower viscosity index oils. Obviously, high viscosity-index lubricants are most suitable for bearing applications experiencing wide temperature variations.

The National Lubricating Grease Institute (NLGI) classification of grease consistency is shown below (table A-5):

TABLE A-5. NLGI CLASSIFICATIONS

NLGI Grease Grades	Penetration No.
0	355-385
1	310-340
2	265-295
3	220-250
4	175-205
5	130-160
6	85-115

POUR POINT

The pour point is the lowest temperature at which a fluid will flow or can be poured. It is important in applications exposed to low temperatures that the lubricating fluid selected has a pour point lower than the minimum ambient temperature.

WARNING

Failure to observe the following warnings could create a risk of death or serious injury.

Proper maintenance and handling practices are critical. Always follow installation instructions and maintain proper lubrication.

TYPES OF LUBRICATION

Timken understands the importance of friction management. Our line of application- and environment-specific lubricants has been developed by leveraging our knowledge of tribology and antifriction bearings, as well as how these two elements affect overall system performance.

Timken® lubricants help bearings and related components operate effectively in demanding industrial operations. High-temperature, anti-wear and water-resistant additives offer superior protection in challenging environments.

Similar to our bearings, all Timken lubricants are backed by highly trained customer service and technical support associates. Industrial customers turn to Timken for comprehensive friction management solutions. We help customers analyze performance and suggest options that make sense for their unique operating conditions and maintenance intervals.

TABLE A-6. STANDARD BALL-BEARING LUBRICATION

Bearing Type	Grease Type	Grease Temperature Range
Radial bearings (double shielded, and single and double shielded)	Polyurea thickener Petroleum oil	-34.44° C to +135° C (-40° to +275° F)
Wide-inner-ring ball bearings (contact seal types)	Polyurea thickener Petroleum oil	-34.44° C to +135° C (-40° to +275° F)
Wide-inner-ring ball bearings (labyrinth seal types)	Synthetic thickener Synthetic hydrocarbon fluid	-53.89° F to +162.75° C (-65° F to +350° F)

NOTE: Open-type bearings and single-shielded types are not prelubricated. They have a rust-preventative coating only and must be lubricated by the customer or end-user before operation.

Bearings that have been factory pre-lubricated use a high-quality grease. Bearings with contacting lip seals and shields contain No. 2 polyurea base grease. Bearings with non-contacting labyrinth seals (suffix KLL in bearing part number) contain a No. 2 modified clay base grease. For normal conditions of service, these bearings require no further lubrication.

Normal service is considered as operating in a clean, dry environment at temperatures between -34° C to +82° C (-30° F to +180° F) and at dN values (bore in millimeter multiplied by speed in RPM) less than 175000.

If service is considered abnormal due to speed, temperature or exposure to moisture, dirt or corrosive chemicals, periodic relubrication may be advisable. Excessive relubrication may cause high operating temperatures due to grease churning. General guidelines for relubrication are provided in table A-7.

TIMKEN BALL-BEARING PILLOW-BLOCK GREASE

Timken ball-bearing pillow-block grease is an NLGI No. 2 polyurea-thickened grease. It provides outstanding long life and moderately high-temperature lubrication to ball bearings. This grease maintains its mechanical shear stability and provides corrosion resistance, even in the presence of salt water. Timken ball-bearing pillow-block grease features low-noise characteristics and excellent pumpability. This grease does not contain extreme-pressure additives but inhibits rust and oxidation. Operating temperatures range from -40° C to 163° C (-40° F to 400° F). This grease is typically used in lightly loaded ball bearings in pillow blocks and conveyors that operate in high-temperature environments, including kiln and glasswork applications, electric motors, chemical manufacturing and noise-sensitive environments.

SAL/SAOL LUBRICATION

SAL/SAOL housed units are intended for use with oil lubrication and are equipped with a filler cup located on top of the pillow block. Each housing assembly also has an overflow cup and a pipe plug located at the base. These can be interchanged as required to properly locate the overflow cup with respect to shaft rotation. The overflow cup should be placed on the downward side of the shaft rotation. Incorrect placement will cause oil to leak from the overflow cup during operation. Oil should be supplied through the filler cup until overflow is full. Please note to inspect and refill only when the shaft is stationary to avoid overfilling.

Inspection is necessary to determine the frequency of refilling, which is based on a number of factors, including speed, temperature and oil type. To avoid inadequate lubrication, maintain the oil level to the top of the overflow cup.

In general, a high-quality automotive or turbine oil with oxidation inhibitors is recommended. For normal operating conditions, an SAE 30 weight oil or equivalent is adequate. Contact your Timken engineer for abnormal service lubrication recommendations.

SURVIVOR® PT, NT AND PS LUBRICATION

These housed units are specifically designed for use in conditions of corrosion and contamination. The premium bearing insert is factory-prelubricated with aluminum-complex, high-quality, type H1, food-grade grease. This grease is acceptable in applications with incidental food contact.

GENERAL RELUBRICATION SUGGESTIONS

Periodic relubrication is advisable due to the nature of food-grade grease and the corrosive environments for which these units are designed. Consult your equipment manufacturer's operating manual for the relubrication cycle. General guidelines are found in table A-7.

TABLE A-7. GENERAL RELUBRICATION RECOMMENDATIONS FOR GREASED BEARINGS[1]

Condition	Relubrication Interval
Indoor service	Not required
Outdoor service	Two/three times per year
Severe outdoor exposure	Once a month
High contamination/washdown	Once a week

[1]As a guideline, relubricate until the first indication of grease is observed purging from either seal lip.

SINGLE-POINT AND CENTRALIZED MULTI-POINT LUBRICATORS

Proper lubrication is critical to bearing and machine performance. To help prevent damage, Timken G-Power and M-Power single-point lubricators deliver periodic grease to bearings, chains, guideways and other industrial equipment components (fig. A-5). You can choose from gas-powered or electromechanical varieties to meet your operating specifications. C-Power multi-point lubricators are a centralized lubrication system capable of delivering grease to up to six lubrication points (fig. A-6). Oil is not an option for this unit.

G-Power, M-Power and C-Power canisters can be filled with Timken-formulated lubricants or many other types of commercial lubricants. A full line of accessories – including brackets, clamps, brushes, fittings and hose extensions – ease installation and offer a host of mounting options for hard-to-reach locations.

Fig. A-5. G-Power and M-Power lubrication units with activators.

Fig. A-6. C-Power.

LOAD RATINGS AND LIFE CALCULATIONS

RADIAL BALL-BEARING LOAD RATINGS

The load ratings published in this catalog are based on ABMA Standard Section 9, but they are increased to reflect improvements in materials and processing. These ratings are referred to as extended basic dynamic load ratings (C_E). Care must be taken that the extended basic dynamic load ratings only be used in equations containing C_E.

NOTATIONS USED IN THIS SECTION

C_N = Radial load rating of bearings at operating speed N – pounds or newtons = (N_f x C_E)
C_E = Extended basic dynamic load rating – radial ball bearings pounds or newtons
C_o = Basic static load rating – radial ball bearing pounds or newtons[1]
K_T = Relative thrust-load factor – ball bearings
L_f = Life factor
L_r = Fatigue life for reliability level r – hours
N = Operating speed – revolutions per minute (RPM)
N_f = Speed factor
R = Applied radial load on bearing pounds or newtons
P = Equivalent radial load on bearing pounds or newtons
T = Applied thrust load on bearing pounds or newtons
Y = Thrust-load factor
a_1 = Life-adjustment factor for reliability[2]
a_2 = Life-adjustment factor for bearing material[3]
a_3 = Life-adjustment factor for application conditions[4]
f_B = Dynamic load rating adjustment factor for number of adjacently mounted bearings[5]
i_B = Number of adjacently mounted bearings
r = Percent reliability of survival life
μ = Operating viscosity – centistokes
μ_R = Reference viscosity – centistokes

[1] C_E does **not** represent the maximum permissible radial load, which, in general, is equal to C_o, the static radial load ratings.

[2] L_{10} rating life is based upon 90 percent survival of a group of bearings at the specified load and speed. The a_1 value is 1.0 for L_{10} life calculations.

[3] The a_2 value is 1.0 when using typical Timken® bearing steel. Bearings with thin-dense chrome-plated races may use an a_2 factor of 3.0 for calculating life.

[4] The a_3 factor of 1.0 may be acceptable to most users, but the factor can be made up of multiple application factors such as adequate lubrication, alignment, temperature or mounting conditions. ABMA standard suggests and a_3 of 0.456 for insert ball bearings slip fitted to the shaft as a result of possible mounting variation.

[5] f_B = 1.0 for wide-inner-ring ball bearings.

FATIGUE LIFE

Because of the dispersion in the life of identical bearings operating under identical conditions, a statistical result will be obtained for bearing fatigue life. For most calculations, life is expressed as the number of hours that 90 percent of a group of identical bearings will exceed under a given set of conditions, and is referred to as the L_{10} life.

The basic equation for radial ball bearings is:

$$L_r = 16667 \times \frac{a_1 \times a_2 \times a_3}{N} \left[\frac{f_B \times C_E}{P}\right]^3 \text{ (Hours)} \qquad \text{Formula } \mathbf{1}$$

In life calculations, the first step is to ascertain the equivalent radial load (P) applied to the bearing from the following equations:

$$R_e = R \text{ or } P = 0.56R + YT \text{ } \} \text{ **use greater value of P,**} \qquad \text{Formula } \mathbf{2} \ \mathbf{3}$$

Values of Y are selected from table A-8 for the appropriate K_T. For more intermediate values of K_T, Y may be estimated by linear interpolation.

TABLE A-8. REQUIRED Y FACTORS FOR BALL BEARING DYNAMIC EQUIVALENT RADIAL LOADS

K_T	Y
0.015	2.30
0.020	2.22
0.025	2.10
0.030	2.00
0.040	1.86
0.050	1.76
0.060	1.68
0.080	1.57
0.100	1.48
0.120	1.42
0.150	1.34
0.200	1.25
0.250	1.18
0.300	1.13
0.400	1.05
0.500	1.00
0.600	–
0.800	–
1.000	–
1.200	–

For single-row bearings and tandem mountings: $K_T = \frac{T}{i_B Co}$

For double-row and preloaded pair mountings: $K_T = \frac{T}{Co}$

RADIAL BALL BEARING LIFE

The L_{10} (expected minimum life for 90 percent of the bearings of a given size and type in a given population) is calculated by the following formula, which is a condensed version of formula 1.

$$L_{10} = \frac{16700}{N} \left(\frac{C_E}{P}\right)^3 \quad \text{(Hours)} \qquad \text{Formula } \boxed{4}$$

The calculation of bearing life also can be performed by using logarithmic factors for rotational speed (N_r) and life (L_f) based on the formula.

$$L_{10} = 500 \left(\frac{C_N}{P}\right)^3 \quad \text{(Hours)} \qquad \text{Formula } \boxed{5}$$

In cases where the rating at a specific speed is not listed, determine C_N by $C_N = N_f \times C_E$; thereby:

$$L_{10} = 500 \left(\frac{N_f C_E}{P}\right)^3 \qquad \text{Formula } \boxed{6}$$

where:

$$N_f = \left(\frac{1}{0.03N}\right)^{3/10} \qquad \text{Formula } \boxed{7}$$

The speed factor (N_f) can be read directly from scale 1 (fig. A-7).

Scale 2 provides life factors (L_f) for practical life requirements, where:

$$L_f = \frac{C_N}{1.44P} \quad \text{or} \quad L_f = \frac{N_f(C_E)}{1.44P}$$

Frequently it is necessary to determine the minimum bearing capacity that will meet a specific application requirement. For this purpose, formula 4 is rewritten:

$$C_E = P \left(\frac{N \times L_{10}}{16700}\right)^{1/3} \qquad \text{Formula } \boxed{8}$$

BEARING LIFE UNDER VARYING LOADS AND SPEEDS

In many applications, bearings are required to run at a number of different loads and speeds. If the different loads and speeds and the portions of time that are in effect are known, the life can be found from the following relation:

$$L_r = \frac{1}{\frac{p_1}{L_{n_1}} + \frac{p_2}{L_{n_2}} + \frac{p_3}{L_{n_3}} + \ldots + \frac{p_n}{L_{n_n}}}$$

Note: $p_1 + p_2 + p_3 + \ldots + p_n = 1.0$

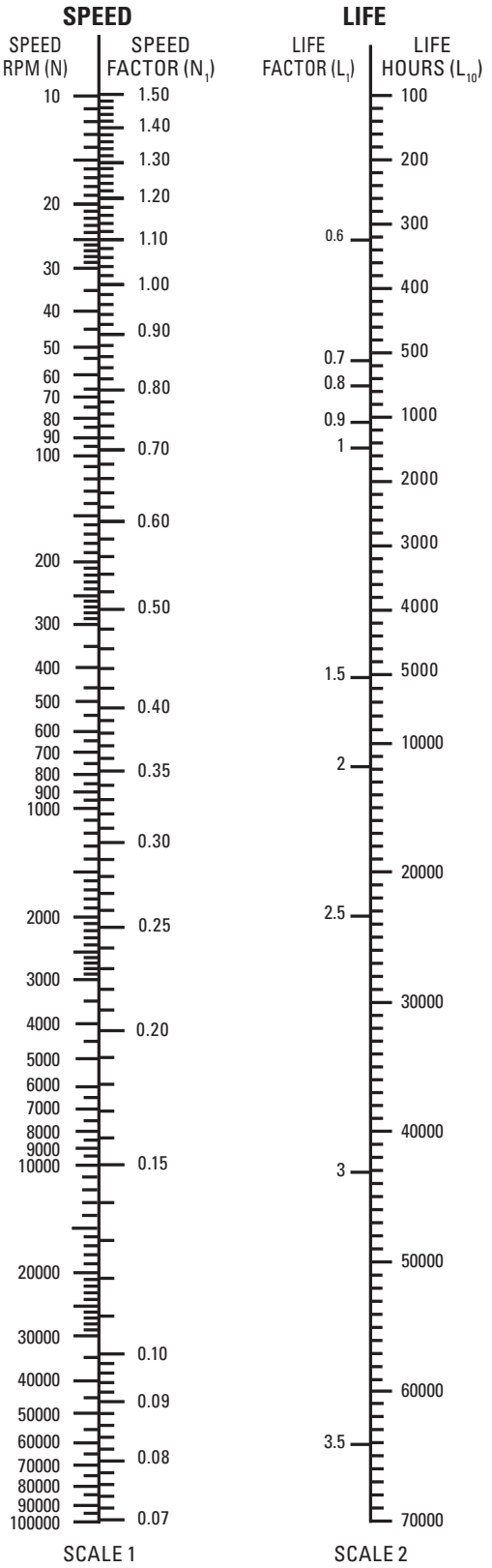

Fig. A-7. Wide-inner-ring ball bearing's speed and life factors.

FREQUENCY COEFFICIENTS

Predictive application maintenance requires knowledge of the frequencies that a bearing can emit, which are based on its specific design. The table below (table A-9) provides the most commonly used coefficients for this purpose. The frequencies are expressed as Orders. To obtain bearing defect frequencies in Hz, multiply the bearing coefficient by the rotating speed in revolutions per second.

Example:

9104-series bearing retainer frequency shaft running at 1200 RPM:

1200 RPM x 1 min/60 seconds x 0.398 = 7.96 Hz.

WIDE-INNER-RING BALL BEARINGS

FTF **Fundamental Train Frequency:** The frequency at which the retainer will operate with inner ring rotation.

BSF **Ball Spin Frequency:** The frequency at which a single defect on a rolling element will be detected.

BPFO **Ball Pass Frequency Outer:** The frequency at which a single defect in the outer race will be detected.

BPFI **Ball Pass Frequency Inner:** The frequency at which a single defect in the inner race will be detected.

OR ROT FTF **Fundamental Train Frequency:** The frequency at which the retainer will operate with outer-ring rotation. Also know as Outer-Ring ROTation.

TABLE A-9. FREQUENCY COEFFICIENTS OF WIDE-INNER-RING BALL BEARINGS

Basic Outer-Ring Size	FTF	BSF	BPFO	BPFI	OR ROT FTF
9104	0.398	2.339	3.578	5.422	0.602
9105	0.397	2.328	3.574	5.426	0.603
9106	0.417	2.933	4.588	6.412	0.583
202K	0.391	2.175	3.125	4.875	0.609
203K	0.382	1.994	3.053	4.947	0.618
204K	0.382	1.992	3.052	4.948	0.618
205K	0.397	2.328	3.574	5.426	0.603
206K	0.396	2.311	3.568	5.432	0.604
207K	0.396	2.303	3.565	5.435	0.604
208K	0.394	2.256	3.547	5.453	0.606
209K	0.402	2.461	3.621	5.379	0.598
210K	0.409	2.665	4.093	5.907	0.591
211K	0.408	2.620	4.078	5.922	0.592
212K	0.407	2.584	4.066	5.934	0.593
213K	0.410	2.685	4.099	5.901	0.590
214K	0.410	2.702	4.104	5.896	0.590
215K	0.415	2.850	4.148	5.852	0.585
216K	0.417	2.923	4.585	6.415	0.583
217K	0.412	2.759	4.122	5.878	0.588
219W	0.410	2.692	6.562	9.438	0.590
220W	0.409	2.665	6.549	9.451	0.591

Basic Outer-Ring Size	FTF	BSF	BPFO	BPFI	OR ROT FTF
303K	0.364	1.696	2.545	4.455	0.636
304K	0.368	1.757	2.574	4.426	0.632
305K	0.367	2.328	3.574	5.426	0.603
306K	0.368	1.757	2.574	4.426	0.632
307K	0.376	1.888	3.006	4.994	0.624
308K	0.378	1.925	3.023	4.977	0.622
309K	0.380	1.955	3.037	4.963	0.620
310K	0.381	1.981	3.047	4.953	0.619
311K	0.382	2.002	3.057	4.943	0.618
312K	0.383	2.020	3.064	4.936	0.617
314K	0.385	2.050	3.076	4.924	0.615
315K	0.385	2.062	3.081	4.919	0.615
316K	0.386	2.073	3.086	4.914	0.614
318K	0.387	2.091	3.093	4.907	0.613
318W	0.381	1.982	4.572	7.428	0.619
319W	0.382	1.993	4.198	6.802	0.618
320K	0.384	2.041	3.073	4.927	0.616
320W	0.379	1.946	4.549	7.451	0.621
321W	0.380	1.958	4.557	7.443	0.620
322W	0.382	2.002	4.203	6.797	0.618
326W	0.384	2.036	4.222	6.778	0.616

MOUNTING
STANDARD SERIES MOUNTING DATA

When shafts are selected for use with wide-inner-ring ball bearings, a minimum slip fit is desirable for the most satisfactory mounting. Special shaft limits are required in certain cases and a variety of standard fits can be used, including a press fit. The recommended figures are noted in table A-10. In some applications, it may be permissible to use increased shaft tolerances. In such cases, applications should be forwarded to your Timken engineer for complete recommendations.

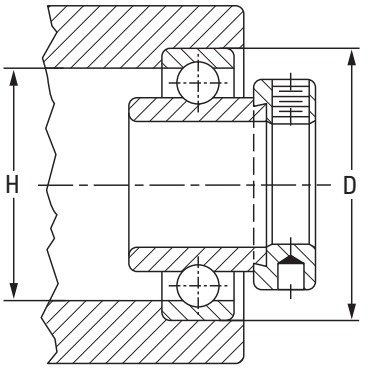

Bearing bore tolerances:

½ in. – 2 3/16 in., nominal to +0.013 mm, +0.0005 in.;
2 ¼ in. – 3 3/16 in., nominal to +0.015 mm, +0.0006 in.;

Recommended shaft tolerances:

½ in. – 1 15/16 in., nominal to -0.013 mm, -0.0005 in.;
2 in. – 2 15/16 in., nominal to -0.025 mm, -0.0010 in.

TABLE A-10. HOUSING, SHOULDER AND SHAFT DIAMETERS

Bearing No.					Shaft Dia.	Basic Outer-Ring Size	Stationary Housing[1]			Shoulder Dia.	
KRR Type	G-KRR Type	RA-RR Type	GRA-RR Type	GYA-RR Type			Housing Bore D		Mean Fit	H	
							Max.	Min.	Loose	Max.	Min.
					in. **mm**		**mm** in.	**mm** in.	**mm** in.	**mm** in.	**mm** in.
1008KRR	–	RA008RR	GRA08RR	GYA008RR	½	203	**40.015** 1.5754	**40.000** 1.5748	**0.013** 0.0005	**34.8** 1.37	**34.0** 1.34
–	–	RA009RR	GRA009RR	GYA009RR	9/16						
101KRR(KR)	G1010KRR	RA010RR	GRA010RR	GYA010RR	5/8						
1011KRR	G1011KRR	–	–	–	11/16						
E17KRR	GE17KRR	RAE17RR	GRAE17RR	GYAE17RR	**17**						
1012KRR(KR)	G1012KRR	RA012RR	GRA012RR	GYA012RR	¾	204	**47.015** 1.8510	**47.000** 1.8504	**0.013** 0.0005	**40.9** 1.61	**40.6** 1.60
E20KRR	GE20KRR	RAE20RR	GRAE20RR	GYAE20RR	**20**						
1013KRR	–	RA013RR	GRA013RR	GYA013RR	13/16	205	**52.017** 2.0479	**51.999** 2.0472	**0.015** 0.0006	**46.0** 1.81	**45.7** 1.80
1014KRR	G1014KRR	RA014RR	GRA014RR	GYA014RR	7/8						
1015KRR(KR)	G1015KRR	RA015RR	GRA015RR	GYA015RR	15/16						
1100KRR(KR)	G1100KRR	RA100RR	GRA100RR	GYA100RR	1						
E25KRR	GE25KRR	RAE25RR	GRAE25RR	GYAE25RR	**25**						
–	G1101KRR	RA101RR	GRA101RR	GYA101RR	1 1/16	206	**62.017** 2.4416	**61.999** 2.4409	**0.015** 0.0006	**56.1** 2.21	**54.9** 2.16
1102KRR(KR)	G1102KRR	RA102RR	GRA102RR	GYA102RR	1 1/8						
1103KRR(KR)	G1103KRR	RA103RR	GRA103RR	GYA103RR	1 3/16						
–	–	–	–	GYA103RR2	1 ¼						
E30KRR	GE30KRR	RAE30RR	GRAE30RR	GYAE30RR	**30**						
1104KRR(KR)	G1104KRR	RA104RR	GRA104RR	GYA104RR	1 ¼	207	**72.017** 2.8353	**71.999** 2.8346	**0.015** 0.0006	**65.0** 2.56	**54.9** 2.47
1105KRR	–	RA105RR	GRA105RR	GYA105RR	1 5/16						
1106KRR	G1106KRR	RA106RR	GRA106RR	GYA106RR	1 3/8						
1107KRR(KR)	G1107KRR	RA107RR	GRA107RR	GYA107RR	1 7/16						
E35KRR	GE35KRR	RAE35RR	GRAE35RR	GYAE35RR	**35**						

[1]When the housing revolves in relation to the shaft, the housing bore dimensions shown on page 131 of the Timken Engineering Manual (order no. 10424) should be used. Outer ring tolerances and housing fillet radii correspond to equivalent 200-series single-row radial bearings.

Continued on next page.

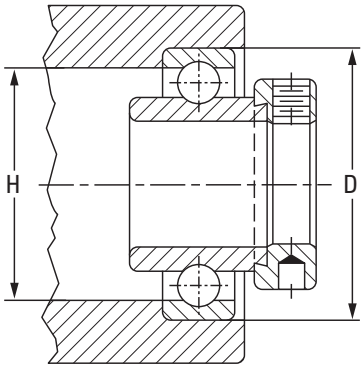

Continued from previous page.

Bearing No.					Shaft Dia.	Basic Outer-Ring Size	Stationary Housing[1]			Shoulder Dia.	
KRR Type	G-KRR Type	RA-RR Type	GRA-RR Type	GYA-RR Type			Housing Bore D		Mean Fit	H	
							Max.	Min.	Loose	Max.	Min.
					in. **mm**		**mm** in.	**mm** in.	**mm** in.	**mm** in.	**mm** in.
1108KRR(KR)	G1108KRR	RA108RR	GRA108RR	GYA108RR	1 1/2	208	**80.018** 3.1503	**80.000** 3.1496	**0.015** 0.0006	**72.9** 2.87	**70.6** 2.78
–	–	RA109RR	GRA109RR	GYA109RR	1 9/16						
–	–	–	GRAE40RR	GYAE40RR	**40**						
1110KRR	G1110KRR	RA110RR	GRA110RR	GYA110RR	1 5/8	209	**85.024** 3.3474	**85.001** 3.3465	**0.020** 0.0008	**78.0** 3.07	**75.4** 2.97
1111KRR(KR)	G1111KRR	RA111RR	GRA111RR	GYA111RR	1 11/16						
1112KRR(KR)	G1112KRR	RA112RR	GRA112RR	GYA112RR	1 3/4						
E45KRR	–	–	GRAE45RR	GYAE45RR	**45**						
–	–	RA113RR	GRA113RR	GYA113RR	1 13/16	210	**90.023** 3.5442	**90.000** 3.5433	**0.020** 0.0008	**83.1** 3.27	**81.0** 3.19
1114KRR	–	RA114RR	GRA114RR	GYA114RR	1 7/8						
1115KRR(KR)	G1115KRR	RA115RR	GRA115RR	GYA115RR	1 15/16						
–	–	–	GRA115RR2	–	2						
E50KRR	GE50KRR	RAE50RR	GRAE50RR	GYAE50RR	**50**						
1200KRR(KR)	G1200KRR	RA200RR	GRA200RR	GYA200RR	2	211	**100.023** 3.9379	**100.000** 3.9370	**0.020** 0.0008	**90.9** 3.58	**90.4** 3.56
–	–	RA201RR	GRA201RR	GYA201RR	2 1/16						
1202KRR	–	RA202RR	GRA202RR	GYA202RR	2 1/8						
1203KRR(KR)	G1203KRR	RA203RR	GRA203RR	GYA203RR	2 3/16						
E55KRR	GE55KRR	RAE55RR	GRAE55RR	GYAE55RR	**55**						
1204KRR	–	–	–	–	2 1/4	212	**110.023** 4.3316	**110.000** 4.3307	**0.020** 0.0008	**101.1** 3.98	**98.3** 3.87
1207KRR(KR)	G1207KRR	–	–	–	2 7/16						
E60KRR	GE60KRR	–	–	–	**60**						
1215KRR	–	–	–	–	2 15/16	215	**130.025** 5.1191	**130.000** 5.1181	**0.023** 0.0009	**120.9** 4.76	**116.6** 4.59
E75KRR	–	–	–	–	**75**						

[1]When the housing revolves in relation to the shaft, the housing bore dimensions shown on page 131 of the Timken Engineering Manual (order no. 10424) should be used. Outer ring tolerances and housing fillet radii correspond to equivalent 200-series single-row radial bearings.

SNAP WIRE MOUNTING

KR-KRR SERIES

When shafts are selected for use with wide-inner-ring ball bearings, a minimum slip fit is desirable for the most satisfactory mounting. Special shaft limits are required in certain cases and a variety of standard fits can be used, including a press fit. The recommended figures are noted in table A-11. For requirements, contact your Timken engineer.

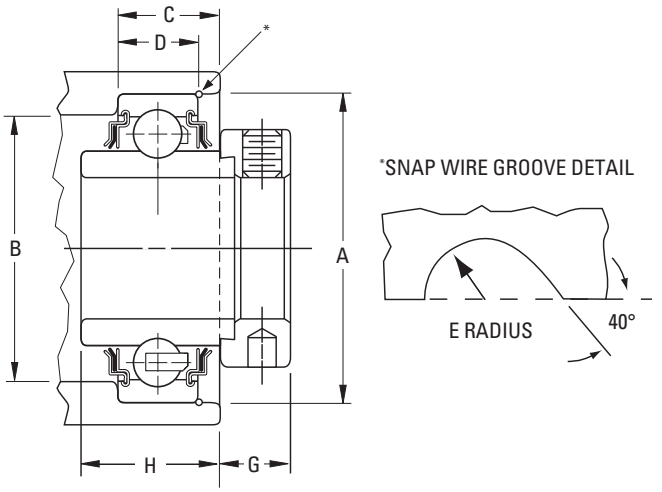

TABLE A-11. R-SEAL STANDARD KR, KRR SERIES

Bearing No.	Shaft Dia.	Basic Outer-Ring Size	Housing Bore Stationary Housing A[1] Max.	Housing Bore Stationary Housing A[1] Min.	Shoulder Dia. B Max.	Shoulder Dia. B Min.	C	D	Radius E	G	H
	in. **mm**		**mm** in.	**mm** in.	**mm** in.	**mm** in.	**mm** in.	**mm** in.	**mm** in.	**mm** in.	**mm** in.
1008KRR	1/2	203	**40.015** 1.5754	**40.000** 1.5748	**36.6** 1.44	**35.8** 1.41	**17.5** 11/16	**9.1** 23/64	**1.2** 3/64	**11.9** 15/32	**25.4** 1
–	9/16										
1010KRR(KR)	5/8										
1011KRR	11/16										
E17KRR	**17**										
1012KRR(KR)	3/4	204	**47.015** 1.8510	**47.000** 1.8504	**43.7** 1.72	**41.1** 1.62	**19.0** 3/4	**15.1** 19/32	**1.2** 3/64	**14.7** 37/64	**29.0** 1 9/64
E20KRR	**20**										
1013KRR(KR)	13/16	205	**52.017** 2.0479	**51.999** 2.0472	**48.5** 1.91	**46.7** 1.84	**20.6** 13/16	**15.9** 5/8	**1.2** 3/64	**13.9** 35/64	**30.6** 1 13/64
1014KRR	7/8										
1015KRR(KR)	15/16										
1100KRR(KR)	1										
E25KR	**25**										
–	1 1/16	206	**62.017** 2.4416	**61.999** 2.4409	**57.9** 2.28	**56.4** 2.22	**21.4** 27/32	**17.1** 43/64	**1.2** 3/64	**16.7** 21/32	**31.8** 1 1/4
1102KRR(KR)	1 1/8										
1103KRR(KR)	1 3/16										
1103KRR3	1 1/4										
E30KRR	**30**										
1104KRR(KR)	1 1/4	207	**72.017** 2.8353	**71.999** 2.8346	**67.6** 2.66	**64.3** 2.53	**23.0** 29/32	**18.3** 23/32	**1.6** 1/16	**17.9** 45/64	**33.3** 1 15/16
1105KRR	1 5/16										
1106KRR	1 3/8										
1107KRR(KR)	1 7/16										
E35KRR	**35**										

[1]When the housing revolves in relation to the shaft, the housing bore dimensions shown on page 131 of the Timken Engineering Manual (order no. 10424) should be used. Outer ring tolerances and housing fillet radii correspond to equivalent 200-series single-row radial bearings.

Continued on next page.

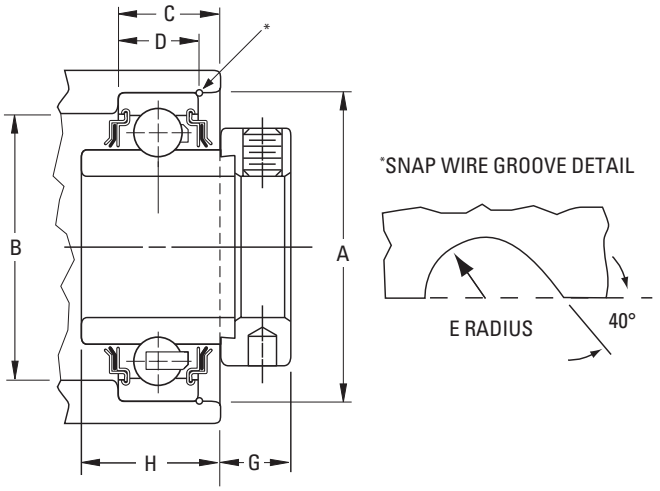

Continued from previous page.

Bearing No.	Shaft Dia.	Basic Outer-Ring Size	Housing Bore Stationary Housing A[1] Max.	Housing Bore Stationary Housing A[1] Min.	Shoulder Dia. B Max.	Shoulder Dia. B Min.	C	D	Radius E	G	H
	in. **mm**		**mm** in.	**mm** in.	**mm** in.	**mm** in.	**mm** in.	**mm** in.	**mm** in.	**mm** in.	**mm** in.
1108KRR(KR)	1 1/2	208	**80.078** 3.1503	**80.000** 3.1496	**75.4** 2.97	**71.4** 2.81	**24.6** 31/32	**19.4** 49/64	**1.6** 1/16	**19.4** 49/64	**36.9** 1 29/64
1109KRR	1 9/16										
E40KRR	**40**										
1110KRR	1 5/8	209	**85.024** 3.3474	**85.001** 3.3465	**80.3** 3.16	**77.0** 3.03	**25.4** 1	**20.2** 51/64	**1.6** 1/16	**19.0** 3/4	**37.3** 1 15/32
1111KRR(KR)	1 11/16										
1112KRR(KR)	1 3/4										
E45KRR	**45**										
1114KRR	1 7/8	210	**90.023** 3.5442	**90.000** 3.5433	**83.1** 3.27	**82.3** 3.24	**26.2** 1 1/32	**21.4** 37/32	**1.6** 1/6	**21.8** 55/64	**40.9** 1 39/64
1115KRR(KR)	1 15/16										
E50KRR	**50**										
1200KRR(KR)	2	211	**100.023** 3.9379	**100.000** 3.9370	**93.7** 3.69	**90.4** 3.56	**26.2** 1 1/32	**22.2** 7/8	**1.6** 1/16	**26.2** 1 1/32	**45.2** 1 25/32
1202KRR	2 1/8										
1203KRR(KR)	2 3/16										
E55KRR	**55**										
1204KRR	2 1/4	212	**110.023** 4.3316	**110.000** 4.3307	**101.1** 3.98	**99.6** 3.92	**28.6** 1 1/8	**23.0** 29/32	**1.6** 1/16	**29.4** 1 5/32	**48.4** 1 29/32
1207KRR(KR)	2 7/16										
E60KRR	**60**										

[1]When the housing revolves in relation to the shaft, the housing bore dimensions shown on page 131 of the Timken Engineering Manual (order no. 10424) should be used. Outer ring tolerances and housing fillet radii correspond to equivalent 200-series single-row radial bearings.

G-KRR SERIES

When shafts are selected for use with wide-inner-ring ball bearings, a minimum slip fit is desirable for the most satisfactory mounting. Special shaft limits are required in certain cases and a variety of standard fits can be used, including a press fit. The recommended values are in table A-12. For special requirements, contact your Timken engineer.

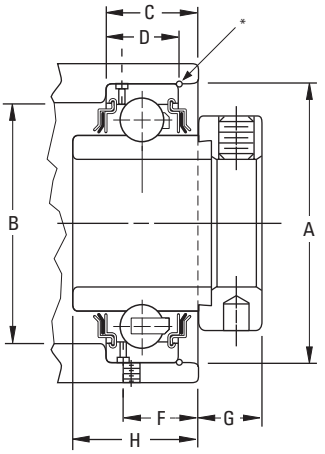

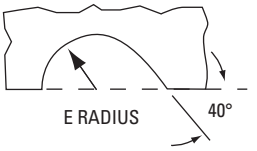

TABLE A-12. R-SEAL STANDARD G-KRR SERIES

Bearing No.	Shaft Dia.	Basic Outer-Ring Size	Housing Bore		Shoulder Dia.		C	D	Radius	F	G	H
			Stationary Housing A[1]		B				E			
			Max.	Min.	Max.	Min.						
	in. **mm**		**mm** in.	**mm** in.	**mm** in.	**mm** in.	**mm** in.	**mm** in.	**mm** in.	**mm** in.	**mm** in.	**mm** in.
G1010KRR	5/8	203	**40.015** 1.5754	**40.000** 1.5748	**36.6** 1.44	**35.8** 1.41	**17.5** 11/16	**13.1** 33/64	**1.2** 3/64	**14.7** 37/64	**11.9** 15/32	**25.4** 1
G1011KRR	11/16											
GE17KRR	**17**											
G1012KRR	3/4	204	**47.015** 1.8510	**47.000** 1.8504	**43.7** 1.72	**41.1** 1.62	**19.0** 3/4	**15.1** 19/32	**1.2** 3/64	**15.9** 5/8	**14.7** 37/64	**29.0** 1 9/64
GE20KRR	**20**											
G1014KRR	7/8	205	**52.017** 2.0479	**51.999** 2.0472	**48.5** 1.91	**46.7** 1.84	**20.6** 13/16	**15.9** 5/8	**1.2** 3/64	**16.7** 21/32	**13.9** 35/64	**30.6** 1 13/64
G1015KRR	15/16											
G1100KRR	1											
GE25KRR	**25**											
G1101KRR	1 1/16	206	**62.017** 2.4416	**61.999** 2.4409	**57.9** 2.28	**56.4** 2.22	**23.8** 15/16	**19.0** 3/4	**1.2** 3/64	**19.8** 25/32	**15.5** 39/64	**32.9** 1 19/64
G1102KRR	1 1/8											
G1103KRR	1 3/16											
GE30KRR	**30**											
G1104KRR	1 1/4	207	**72.017** 2.8353	**71.999** 2.8346	**67.6** 2.66	**64.3** 2.53	**25.4** 1	**20.2** 51/64	**1.6** 1/16	**21.4** 27/32	**16.7** 21/32	**34.5** 1 23/64
G1106KRR	1 3/8											
G1107KRR	1 7/16											
GE35KRR	**35**											
G1108KRR	1 1/2	208	**80.018** 3.1503	**80.000** 3.1496	**75.4** 2.97	**71.4** 2.81	**27.8** 1 3/32	**22.2** 7/8	**1.6** 1/16	**23.8** 15/16	**17.5** 11/16	**38.9** 1 17/32
G1109KRR	1 9/16											
GE40KRR	**40**											
G1110KRR	1 5/8	209	**85.024** 3.3474	**85.001** 3.3465	**80.3** 3.16	**77.0** 3.03	**28.6** 1 1/8	**23.4** 59/64	**1.6** 1/16	**24.2** 31/32	**17.5** 11/16	**38.9** 1 17/32
G1111KRR	1 11/16											
G1112KRR	1 3/4											
GE45KRR	**45**											
G1115KRR	1 15/16	210	**90.023** 3.5442	**90.000** 3.5433	**83.1** 3.27	**82.3** 3.24	**29.4** 1 5/32	**24.2** 61/64	**1.6** 1/16	**24.6** 31/32	**20.2** 51/64	**42.5** 1 43/64
GE50KRR	**50**											
G1200KRR	2	211	**100.023** 3.9379	**100.000** 3.9370	**93.7** 3.69	**90.4** 3.56	**31.8** 1 1/4	**26.2** 1 1/32	**1.6** 1/16	**26.6** 1 3/64	**24.2** 61/64	**47.2** 1 55/64
G1203KRR	2 3/16											
GE55KRR	**55**											

[1]When the housing revolves in relation to the shaft, the housing bore dimensions shown on page 131 of the Timken Engineering Manual (order no. 10424) should be used. Outer ring tolerances and housing fillet radii correspond to equivalent 200-series single-row radial bearings.

RA-RR SERIES

When shafts are selected for use with wide-inner-ring ball bearings, a minimum slip fit is desirable for the most satisfactory mounting. Special shaft limits are required in certain cases and a variety of standard fits can be used, including even a press fit. The recommended values are in table A-13. For special requirements, contact your Timken engineer.

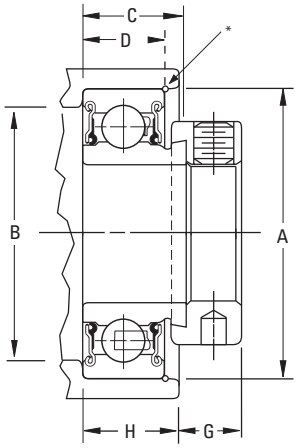

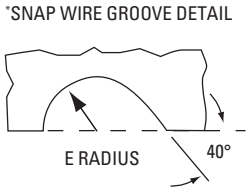

TABLE A-13. RA-RR SERIES, NON-RELUBRICATABLE

Bearing No.	Shaft Dia.	Basic Outer-Ring Size	Housing Bore		Mean Fit Loose	Shoulder Dia.		C	D	H	Radius	G
			Stationary Housing A[1]			B						
			Max.	Min.		Max.	Min.					
	in. **mm**		**mm** in.	**mm** in.		**mm** in.	**mm** in.	**mm** in.	**mm** in.	**mm** in.	**mm** in.	**mm** in.
RA008RR	1/2	203	**40.015** 1.5754	**40.000** 1.5748	**0.013** 0.0005	**35.1** 1.34	**34.3** 1.31	**19.0** 3/4	**14.3** 9/16	**16.67** 21/32	**1.2** 3/64	**9.5** 3/8
RA009RR	9/16											
RA010RR	5/8											
RAE17RR	**17**											
RA012RR	3/4	204	**47.015** 1.8510	**47.000** 1.8504	**0.013** 0.0005	**40.9** 1.61	**40.6** 1.58	**20.6** 13/16	**15.9** 5/8	**17.07** 43/64	**1.2** 3/64	**10.3** 13/32
RAE20RR	**20**											
RA013RR	13/16	205	**52.017** 2.0479	**51.999** 2.0472	**0.015** 0.0006	**46.0** 1.81	**45.7** 1.78	**20.6** 13/16	**15.9** 5/8	**17.07** 43/64	**1.2** 3/64	**10.3** 13/32
RA014RR	7/8											
RA015RR	15/16											
RA100RR	1											
RAE25RR	**25**											
RA101RR	1 1/16	206	**62.017** 2.4416	**61.999** 2.4409	**0.015** 0.0006	**56.1** 2.21	**54.9** 2.16	**23.8** 15/16	**19.0** 3/4	**20.24** 51/64	**1.2** 3/64	**11.9** 15/32
RA102RR	1 1/8											
RA103RR	1 3/16											
RA103RR2	1 1/4											
RAE30RR	**30**											
RA104RR	1 1/4	207	**72.017** 2.8353	**71.999** 2.8346	**0.015** 0.0006	**65.0** 2.56	**62.7** 2.47	**25.4** 1	**20.6** 13/16	**22.22** 7/8	**1.6** 1/16	**13.5** 17/32
RA105RR	1 5/16											
RA106RR	1 3/8											
RA107RR	1 7/16											
RAE35RR	**35**											
RA108RR	1 1/2	208	**80.018** 3.1503	**80.000** 3.1496	**0.015** 0.0006	**72.9** 2.87	**70.6** 2.78	**28.6** 1 1/8	**23.0** 29/32	**26.19** 1 1/32	**1.6** 1/16	**15.1** 19/32
RA109RR	1 9/16											
RAE40RR	**40**											
RA110RR	1 5/8	209	**85.024** 3.3474	**85.001** 3.3465	**0.020** 0.0008	**78.0** 3.07	**75.4** 2.97	**28.6** 1 1/8	**23.0** 29/32	**26.19** 1 1/32	**1.6** 1/16	**15.1** 19/32
RA111RR	1 11/16											
RA112RR	1 3/4											
RAE45RR	**45**											

[1]When the housing revolves in relation to the shaft, the housing bore dimensions shown on page 131 of the Timken Engineering Manual (order no. 10424) should be used. Outer ring tolerances and housing fillet radii correspond to equivalent 200-series single-row radial bearings.

Continued on next page.

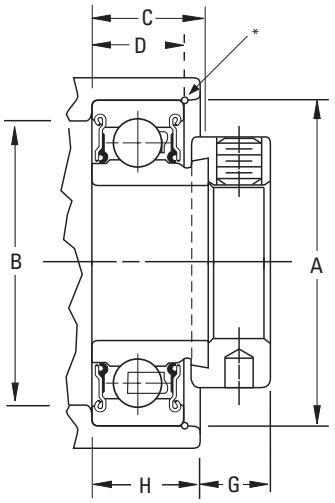

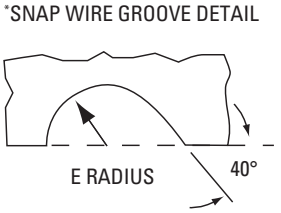

Continued from previous page.

Bearing No.	Shaft Dia.	Basic Outer-Ring Size	Housing Bore Stationary Housing A[1] Max.	Housing Bore Stationary Housing A[1] Min.	Mean Fit Loose	Shoulder Dia. B Max.	Shoulder Dia. B Min.	C	D	H	Radius E	G
	in. **mm**		**mm** in.	**mm** in.		**mm** in.	**mm** in.	**mm** in.	**mm** in.	**mm** in.	**mm** in.	**mm** in.
RA113RR	1 13/16	210	**90.023** 3.5442	**90.000** 3.5433	**0.020** 0.0008	**83.1** 3.27	**80.5** 3.17	**28.6** 1 1/8	**23.0** 29/32	**26.19** 1 1/32	**1.6** 1/16	**15.1** 19/32
RA114RR	1 7/8											
RA115RR	1 15/16											
RAE50RR	**50**											
RA200RR	2	211	**100.023** 3.9379	**100.000** 3.9370	**0.020** 0.0008	**93.5** 3.68	**90.4** 3.56	**31.0** 1 7/32	**25.4** 1	**28.18** 1 7/64	**1.6** 1/16	**17.5** 11/16
RA201RR	2 1/16											
RA202RR	2 1/8											
RA203RR	2 3/16											
RAE55RR	**55**											

[1]When the housing revolves in relation to the shaft, the housing bore dimensions shown on page 131 of the Timken Engineering Manual (order no. 10424) should be used. Outer ring tolerances and housing fillet radii correspond to equivalent 200-series single-row radial bearings.

GRA-RR SERIES

When shafts are selected for use with wide-inner-ring ball bearings, a minimum slip fit is desirable for the most satisfactory mounting. Special shaft limits are required in certain cases and a variety of standard fits can be used, including even a press fit. The recommended values are in table A-14. For special requirements, contact your Timken engineer.

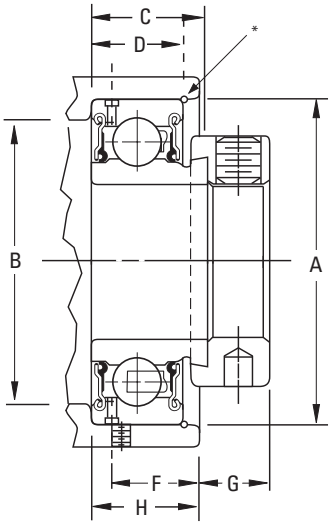

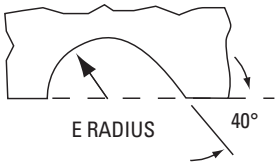

TABLE A-14. GRA-RR SERIES, RELUBRICATABLE

Bearing No.	Shaft Dia.	Basic Outer-Ring Size	Housing Bore		Shoulder Dia.		C	D	H	Radius	F	G
			Stationary Housing A[1]		B					E		
			Max.	Min.	Max.	Min.						
	in. **mm**		**mm** in.	**mm** in.	**mm** in.	**mm** in.	**mm** in.	**mm** in.	**mm** in.	**mm** in.	**mm** in.	**mm** in.
GRA008RR	1/2	203	**40.015**	**40.000**	**35.1**	**34.3**	**19.0**	**14.3**	**16.67**	**1.2**	**22.32**	**9.5**
GRAE17RR	**17**		1.5754	1.5748	1.38	1.35	3/4	9/16	21/32	3/64	0.879	3/8
GRA012RR	3/4	204	**47.015**	**47.000**	**40.9**	**40.6**	**20.6**	**15.9**	**17.07**	**1.2**	**25.6**	**10.3**
GRAE20RR	**20**		1.8510	1.8504	1.61	1.60	13/16	5/8	43/64	3/64	1.008	13/32
GRA014RR	7/8	205	**52.017**	**51.999**	**46.0**	**45.7**	**20.6**	**15.9**	**17.07**	**1.2**	**30.61**	**10.3**
GRAE25RR	**25**		2.0479	2.0472	1.81	1.80	13/16	5/8	43/64	3/64	1.205	13/32
GRA101RR	1 1/16	206	**62.017**	**61.999**	**56.1**	**54.9**	**23.8**	**19.0**	**20.24**	**1.2**	**37.29**	**11.9**
GRAE30RR	**30**		2.4416	2.4409	2.21	2.16	15/16	3/4	51/64	3/64	1.468	15/32
GRA104RR	1 1/4	207	**72.017**	**71.999**	**65.0**	**62.7**	**25.4**	**20.6**	**22.22**	**1.6**	**43.08**	**13.5**
GRAE35RR	**35**		2.8353	2.8346	2.56	2.47	1	13/16	7/8	1/16	1.696	17/32

[1]When the housing revolves in relation to the shaft, the housing bore dimensions shown on page 131 of the Timken Engineering Manual (order no. 10424) should be used. Outer ring tolerances and housing fillet radii correspond to equivalent 200-series single-row radial bearings.

INSTALLATION

Ball bearing housed units are available in a wide variety of types and sizes to accommodate a complete range of operating conditions.

These units generally have cast-iron housings and are designed for mounting on straight shafts with a slip fit. The self-locking collar and the set screw inner bearing design provides ease in mounting.

1. Ensure that the shaft is clean, free from burrs, straight and of proper diameter. The bearing should not be mounted on a worn section of the shaft. Using shafts with hardness greater than HRC 45 will reduce effectiveness of locking devices. See table A-15 on page A-23 for recommended shaft tolerances.
2. Align the bearing in its housing and slide the unit into position on the shaft.
3. Bolt housing tightly to its mounting supports using an appropriately sized fastener (table A-17 on page A-23). Flat washers should be used when installing any kind of housed unit. Washers should be properly sized to bolt diameter and should not be an SAE grade, which is smaller.

BALL HOUSED UNITS MAY BE LOCKED INTO POSITION ON SHAFTS USING EITHER OF THE FOLLOWING METHODS

4. **Eccentric locking-collar bearings:** Slide collar over cammed end of inner ring. Rotate collar to engage cams and lock by lightly tapping with drift pin in the direction of shaft rotation. Tighten set screw to recommended torque levels as shown in table A-16 on page A-23.

   In cases where the units are mounted vertically or where they are to assume considerable thrust loading, the unit should be placed so that the collar is forced against the inner ring by the thrust rather than away from it. In these cases, it may be advisable to spot the shaft under the set screw.

   To disassemble, loosen set screw and lightly tap collar in direction opposite shaft rotation.

5. **Set screw locking bearings:** Lock bearing to the shaft by tightening each inner ring set screw incrementally to recommended torque levels as shown in table A-16 on page A-23. For concentric collar units, tighten each collar set screw to recommended torque levels in tables. To disassemble, loosen set screw.

INSTALLATION PROCEDURE FOR HIGH-SPEED OR HIGH-TEMPERATURE SAL/SAOL BEARINGS

6a. Remove housing cover gasket, bearing, spacer ring, endplates and packings. Use care when handling gasket and packings. Slide housing and one endplate along shaft. Ensure that the overflow cup, located at the base of the pillow block, is placed on the downward side of shaft rotation. Slide bearing onto shaft and into housing, with cam side outward (facing open end of housing).

   Fixed mounting: Position bearing against housing shoulder and place spacer ring between bearing aligning ring face and housing cover shoulder face.

   Float mounting: Position bearing in center of its floating space between housing and housing cover shoulder faces. Do not use spacer ring.

   In general, it is preferable for the fixed bearing to be closest to the drive position.

b. Follow step 4 or 5 on this page to secure bearing to shaft.

c. Replace gasket and housing cover.

d. Install packings and endplates. Tighten screws holding endplates to force packings into contact with shaft. This creates an effective seal.

e. To disassemble, reverse the above operations to remove bearing from the shaft.

NOTE

Do not overtighten packings. If considerable heat develops during operation, loosen packings by loosening the screws holding endplate.

WARNING

Failure to observe the following warnings could create a risk of death or serious injury.

Proper maintenance and handling practices are critical. Always follow installation instructions and maintain proper lubrication.

TECHNICAL DATA

This section provides useful installation details related to shaft tolerance and torque for set screws and bolts.

TABLE A-15. SUGGESTED SHAFT TOLERANCE[1]

Shaft Size		Tolerance
in.	**mm**	
1/2 - 1 15/16	**12.7 - 49.2**	nominal to -0.0005 in. , -0.013 mm
2 - 3 15/16	**50.8 - 100.0**	nominal to -0.0010 in., -0.025 mm
above 4	**101.6**	nominal to -0.0015 in., -0.038 mm

[1]These are for normal service; for heavy loads, high speeds or vertical shaft applications, reduce the suggested shaft tolerance by half.

TABLE A-16. SUGGESTED SET SCREW TIGHTENING TORQUE

Set Screw Size	Standard Steel	Stainless Steel (TDCF inserts)
in.	in. - lbs.	in. - lbs.
#10	35	23
1/4	80	60
5/16	155	122
3/8	275	213
7/16	425	340
mm	**Nm**	**Nm**
M5	**4.0**	**3.1**
M6	**6.6**	**4.9**
M8	**15.3**	**11.5**
M10	**30.0**	**22**
M12	**49.0**	**37**

TABLE A-17. SUGGESTED BOLT MOUNTING TORQUE

Bolt Size	Torque
in.	ft. - lbs.
3/8	27
1/2	65
5/8	130
3/4	230
7/8	573
1	858
1 1/8	1059
mm	**Nm**
M10	**44**
M12	**77**
M16	**192**
M20	**372**

SELECTION GUIDE FOR APPLICATIONS
BALL-BEARING HOUSED UNITS

This is a general guide. For operating conditions outside the ranges identified in table A-18, consult your Timken engineer.

TABLE A-18. APPLICATION FACTOR

(Low) -30000 dN	Increasing Speed →	175000 dN →	250000 dN[1]	
-34° C (-30° F)	Increasing Temperature →	+121° C (+250° F)	+135° C (275° F)	
(Severe)	← Increasingly Contaminated Environment	(Slight)		

[1]Bearing bore (mm) x RPM.

Table A-19 is an application selection guide for ball-bearing housed units.

TABLE A-19. BALL-BEARING HOUSED-UNIT SELECTION GUIDE FOR APPLICATIONS

Load	Bearing Types																	
	Wide Inner Ring Ball Bearing with Tri-ply Seals Self-Locking Collar		Wide-Inner-Ring Ball Bearing With Contact Seals Self-Locking Collar				Extended Inner Ring Bearing with Contact Seals Self-Locking Collar				Wide-Inner-Ring Ball Bearing with Contact Seals Set Screw Lock			Narrow Width Bearing with Contact Seals Set Screw Lock			Wide-Inner-Ring Ball Bearing with Labyrinth or Special Seals Self-Locking Collar		
	Housing Type		Housing Type				Housing Type				Housing Type			Housing Type			Housing Type		
	Pillow Block	Flange Unit	Pillow Block	Flange Unit	Take-Up Unit	Cartridge	Pillow Block	Flange Unit	Take-Up Unit	Cartridge	Pillow Block	Flange Unit	Take-Up Unit	Pillow Block	Flange Unit	Take-Up Unit	Pillow Block	Flange Unit	Take-Up Unit
Light Duty			RR, RRT[1] RRTR[1] GRR				PB[1] PBS[1] RBG(U) RPB[1]	LFST[1] VFMST[1] RBGF RA, RAT[1] RATR[1] GRA	MSTU[1]	RCSM[1] RCR[1] LCR[1] RABR[1]									
Normal Duty	TAK TAS	TCJ TCJT	RAK RAS RAKH RAKHL[2] DRNR	RCJ RCJT GFRTD(R) RFTD(R)[1] GRFD(R) RFD(R)[1]	RTU TU	RC	VAK VAS VTB	VCJ VCJT FLCT[1] GVFTD(R) VFTD(R)[1] GVFD(R) VFD(R)[1]	VTU VNTU		YAS YAK RASC YASM	YCJ YCJT RCJC RCJTC RFC YCJTM YCJM	YTU	SAS SAK STB	SCJ SCJT	STU	LAK LAS LSA SAL[3] LAKHL	LCJ LCJT	LTU
Heavy Duty			RAO RSAO	RCJO													LAO LSAO SAOL[3]	LCJO	

[1]Non-relubricatable.
[2]Float unit, grease lubrication.
[3]Fixed and floating. Oil lubrication, SAL and SAOL units, with adjustable seal packages also can be considered for adverse environments.
NOTE: All bearings or units are double sealed and prelubricated with grease except where noted.

WIDE-INNER-RING BALL BEARINGS

Wide-inner-ring ball bearings consist of a single-row ball bearing and an extended inner ring. They carry radial, axial and combination loads. The extended inner ring slips onto the shaft and secures with a locking mechanism.

- **Sizes:** Standard series: 15 mm – 75 mm shaft (1/2 – 2 15/16 in.). Medium and heavy-duty series are available in larger sizes.
- **Industries and applications:** Agriculture, food processing, fans, blowers, and conveyors.
- **Features:** Available with a variety of shaft locking systems: eccentric locking collars, set screws and concentric locking collars.
- **Benefits:** Designed for ease of mounting and maximum shaft support.

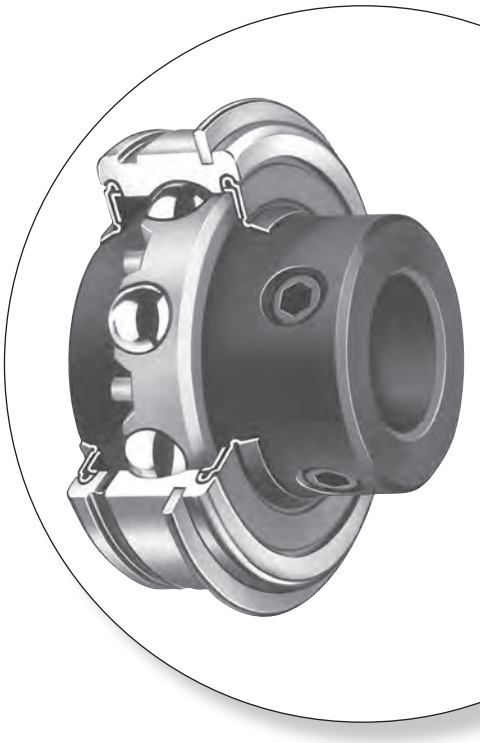

NOMENCLATURE

Prefixes:
Basic Series and Additional Features

C	concentric collar
E	metric bore
G	relubricatable
1	standard series (200-series bearings)
L	light series
N	heavy series (300-series bearings)
RA	extended inner ring, one side only
SM	standard series (open-type bearings)
SMN	heavy series (open-type bearings)
ER, YA	set screw locking device series
M	medium-duty set screw lock series

Suffixes:
Internal Construction

K	full width inner, Conrad, non-filling slot-type
W	maximum capacity filling slot-type

G1 **103** **K** **RRB** — **SGT**

Numbers:
Last three numbers indicate bore size — first in inches, last two in sixteenths

015	15/16 in.
103	1 3/16 in.
203	2 3/16 in.
25	25 mm (metric)
40	40 mm (metric)

Additional Features

L	one Mechani-Seal
LL	two Mechani-Seals
PP	two seals
R	one land-riding rubber seal
RR	two land-riding rubber seals
B	spherical outside diameter
S	external self-aligning
PP2, 3, 4, etc., –	tri-ply seals (if preceded by K)
TDC™	thin-dense chrome plate
F	food-grade grease
SGT	Shaft Guarding Technology™

Fig. A-8. Wide-inner-ring ball bearing nomenclature.

⚠ WARNING
Failure to observe the following warnings could create a risk of death or serious injury.

Proper maintenance and handling practices are critical. Always follow installation instructions and maintain proper lubrication.

Tensile stresses can be very high in tightly fitted bearing components. Attempting to remove such components by cutting the cone (inner race) may result in a sudden shattering of the component causing fragments of metal to be forcefully expelled. Always use properly guarded presses or bearing pullers to remove bearings from shafts, and always use suitable personal protective equipment, including safety glasses.

⚠ CAUTION
Failure to follow this caution could create a risk of injury.

SHAFT GUARDING TECHNOLOGY™
Do not remove band from bore groove. Removal may cause it to release suddenly.

NOTE

The products catalogued are application specific. Any use in applications other than those intended could lead to equipment failure or to reduced equipment life.

Use of improper bearing fits may cause damage to equipment.

Do not use damaged bearings. The use of a damaged bearing can result in equipment damage.

INTRODUCTION

WIDE-INNER-RING BALL BEARING DESIGN FOR BALL BEARINGS THAT ARE EASILY MOUNTED ON STRAIGHT SHAFTS AND POSITIONED WITHOUT SHOULDERS, LOCKNUTS OR ADAPTERS

The internal bearing construction is basically the same as the deep race, single-row radial type with the ability to carry radial, thrust and combined loads, while providing low-friction qualities. The inner ring is generally extended on both sides of the race to provide additional shaft support, and is locked to the shaft by specially designed set screws, an eccentric self-locking collar or a concentric collar. The wide-inner-ring ball bearings also are available with cylindrical or spherical outside diameters (O.D.). The cylindrical or straight O.D. type is used for mounting in straight-bored housings. The spherical O.D. type must be mounted in a corresponding spherical seat and is used to compensate for shaft or housing misalignments.

WIDE-INNER-RING BALL BEARINGS WITH ECCENTRIC LOCKING COLLARS

The following series are available with the eccentric cam (self-locking) collar. See installation instructions in table A-20 on page A-29.

RR SERIES

These bearings feature the flareout, contact-type R-seal which encloses a synthetic rubber-impregnated washer between two metal caps (fig. A-9). Most sizes incorporate the shroud-seal design. R-seal wide-inner-ring ball bearings are available in the following non-relubricatable variations: KR (one seal, cylindrical O.D.), KRR (two seals, cylindrical O.D.) and KRRB (two seals, spherical O.D.). Relubricatable versions are: G-KRR, G-KRRB and GN-KRRB (heavy-duty).

Fig. A-9. RR series.

LL SERIES

These bearings are dimensionally interchangeable with the RR series, but have non-contact labyrinth seals and steel cages for low torque, high speed and higher temperature service (up to 177° C [350° F]).

RA-RR SERIES

The RA-RR series features an extended inner ring and self-locking collar for simple and effective shaft retention in a standard-series bearing (fig. A-10). The positive contact, land-riding R-seal provides improved protection against the heavy contamination encountered in many applications. All sizes have a heat-stabilized, moisture-conditioned 6/6 nylon retainer, which has proven effective under conditions of misalignment. RA-RR extended inner- ring bearings are available as RA-RR (two-seals, straight O.D.) and RA-RRB (two seals, spherical O.D.). Relubricatable versions are GRA-RR and GRA-RRB.

Fig. A-10. RA-RR series.

TRI-PLY SEAL SERIES

Fig. A-11. Tri-ply seal series.

Tri-ply seal bearings are designed for environments where severe conditions and moisture are present (fig. A-11). The one-piece tri-ply seals incorporate a highly effective seal design molded to an exterior shroud cap. The shroud cap protects the seal lips from fiber wrap and abrasion while enhancing the overall sealing effectiveness of the unit. All units incorporate the self-locking collar and have a nylon retainer. Tri-ply seal bearings are available in both a non-relubricatable (KPPB) and relubricatable version (G-KPPB).

EXTERNAL SELF-ALIGNING SERIES

The construction of this series permits the inner assembly, which contains an open-type ball bearing with spherical O.D. to align in the seat of the mating outer ring (fig. A-12). The seat of this outer ring is matched with the spherical O.D. of the ball bearing outer ring providing unrestricted self-alignment and allowing the inner assembly to become square and true with the shaft. Self-aligning units are available in both standard SM-S or heavy SMN-S series.

Fig. A-12. External self-aligning series.

RA-DD-SERIES BEARINGS

The RA-DD-series bearings are extended inner-ring types with cam locking collars (fig. A-13). They incorporate two close-fitting, non-contact grease shields to effectively retain lubricant and provide protection against harmful contaminants. The non-contact metallic shields provide improved high-speed and low-torque performance required for high-speed applications such as printing presses and tissue manufacturing. The 6/6 molded nylon retainer has proven effective under conditions of misalignment. These bearings are dimensionally interchangeable and have the same load capacities as the RA-RR series. Available in 15.88 mm – 38.10 mm (5⁄8 in. – 1 1⁄2 in.) shaft sizes.

Fig. A-13. RA-DD series.

WIDE-INNER-RING BALL BEARINGS WITH CONCENTRIC COLLARS

GC SERIES

Fig. A-14. GC series.

The GC series wide-inner-ring ball bearings are relubricatable with spherical outside diameters, nylon retainers and shroud seals (fig. A-14). The metal shroud maintains tight seal contact against the inner ring and shields the rubber seals from damage due to dirt or fiber wrap. The concentric collar is locked to the shaft by two set screws, located 120 degrees apart, mated with threaded holes in the collar and drilled holes in the bearing inner ring.

YM MEDIUM-DUTY SERIES

Fig. A-15. YM series.

The Timken medium-duty series offers reliable performance and extended life for applications that carry heavier loads (fig. A-15). This series has been designed with a combination of premium features – superfinished raceways and a nylon-patch set screw locking device, designed for demanding conditions. These bearing inserts will operate with reduced levels of noise, vibration and friction and are the choice antifriction component for saw and paper mill applications, fan and blower assemblies, food and grain handling, and conveyor systems.

CAM (SELF-LOCKING) COLLAR INSTALLATION INSTRUCTIONS

The self-locking collar eliminates the need for locknuts, washers, shoulders, sleeves and adapters. With various seal and inner width variations for many agricultural and industrial applications, self-locking collars are the easiest housed units to install.

The locking collar has a counterbored recess made purposely eccentric to the collar bore. When assembled on the shaft, this eccentric recess engages or mates with an eccentric cam end of a bearing's inner ring. The collar is engaged on the inner cam of the bearing.

This assembly grips the shaft tightly with a positive binding action that increases with use. No adjustments of any kind are necessary. The collar set screw provides supplementary locking.

TABLE A-20. CAM COLLAR INSTALLATION

1. Observe cam design of the wide inner ring and self-locking collar.

2. Mate the cam of the collar with the cam of the wide inner ring.

3. Press the locking collar against the wide inner ring and turn in the direction of shaft rotation until tightly engaged.

4. With drift pin in collar hole, tap lightly in direction of shaft rotation to lock.

   For stationary shafts and outer ring rotation, turn the collar in opposite direction of rotation.

5. Tighten set screw in collar.

WIDE-INNER-RING BALL BEARINGS WITH SET SCREW LOCKING DEVICE

The following series are available with the set screw locking device with special set screws that are resistant to loosening during operation.

Y SERIES

Full-width, inner-ring Y-series bearings increase shaft support in heating, ventilation and air conditioning (HVAC) systems, conveyors and other industrial applications (fig. A-16). They feature superfinished raceways, grade-10 balls and anti-backout nylon-patch set screws. Flexible 6/6 nylon retainers and land-riding shroud seals ensure excellent performance. They are factory-prelubricated. Relubricatable set screw mounting feature is ideal for reversing applications. To protect the shaft with Shaft Guarding Technology™ (page A-31), add suffix SGT to the part number when ordering.

Fig. A-16. Y series.

YA SERIES

The YA-series relubricatable and non-relubricatable bearings are an extended inner-ring type with specially designed set screws (fig. A-17). Positive-contact, land-riding R-seals provide protection against harmful contaminants and retain lubricant.

Set screw series bearings are available in both non-relubricatable version YA and relubricatable version GYA-RRB. Both types have nylon retainers.

Fig. A-17. YA series.

ER SERIES

This series offers industry-standard mounting dimensions and standard nomenclature for a large variety of sizes of relubricatable, extended inner-ring bearings for through-bored housings (fig. A-18). All bearings in this series have nylon retainers and are equipped with snap rings, eliminating the need for machining housing shoulders. ER bearings are designed with a unique set screw locking device that locks the bearing to the shaft and is resistant to loosening during operation. Positive-contact, land-riding R-seals provide protection against harmful contaminants and retain lubricant. All ER bearings are black-oxide-coated for corrosion resistance. Ideal for low-starting and running-torque applications. To protect the shaft with Shaft Guarding Technology (page A-31), add suffix SGT to the part number when ordering.

Fig. A-18. ER series.

SHAFT GUARDING TECHNOLOGY™ FOR SET SCREW LOCKING DEVICES

Housed units with Timken Shaft Guarding Technology use a stainless-steel, hardened band to transfer gripping pressure on the shaft. Unlike traditional set screws, which can dig into the shaft, there are no nicks, raised metal or permanent shaft damage when using Shaft Guarding Technology. The stainless band won't corrode on the shaft.

Timken Shaft Guarding Technology is designed to exceed gripping application requirements, maintain dimensional integrity and reduce fretting corrosion. This is a preferred solution when shaft replacement is costly.

Housed units with Shaft Guarding Technology™:

- Are faster and easier to install and remove.
- Reduce the number of shaft replacements.
- Decrease overall system costs.

Tight grip offers protection.

- Two set screws and a nylon patch at a 90-degree separation provide strong holding capability with minimal distortion.
- Groove running beneath the set screws in the inner ring bore keeps the band in place.
- Hardened stainless-steel band helps protect the shaft from damage.
- Longer inner ring along the shaft (ABMA compliant) improves shaft support and reduces bearing misalignment.
- Timken thin-dense chrome (TDC™) optional.
- Seal options include three-piece R-seal for normal-to-high contamination environments and L-seal for higher speeds and temperatures.
- Choice of housing configurations.

Industries and applications:

- Rubber and plastic.
- Agriculture (combines and implements).
- Forest products (paper, tissue, newsprint, fine paper).
- Industrial machinery.
  - Fans and blowers.
  - Canning and bottling.
  - Conveyors.
  - Food processing.
  - Printing presses.
  - Packaging.
  - Textiles.

INDUSTRIAL SERIES

KR, KRR, KRRB NON-RELUBRICATABLE TYPES

- Designed for extremely dirty or wet conditions.
- Feature R-seals with flared lips that firmly contact the ground O.D. of the inner ring.
- R-seals provide a positive seal against dirt and other contaminants, while effectively retaining the lubricant.
- Equipped with shroud-seals, providing extra effectiveness and protection.
- Extra-wide design provides additional shaft support and extra-large grease capacity.

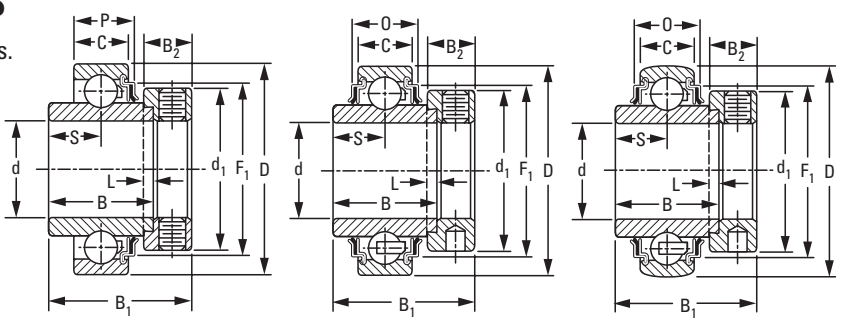

KR One Seal Cylindrical O.D. | **KRR Two Seals Cylindrical O.D.** | **KRRB Two Seals Spherical O.D.**

Suggested shaft tolerances:

½ in. – 1 15/16 in., nominal to -0.013 mm, -0.0005 in.;
2 in. – 2 15/16 in., nominal to -0.025 mm, -0.0010 in.

To order, specify bearing number followed by "+ COL".

Example: 1103KRRB + COL.

Bearing No. Cylindrical O.D.	Bearing No. Cylindrical O.D.	Bearing No. Spherical O.D.	Collar No.	Basic Outer-Ring Size	Shaft Dia. d	O.D. D	Ring Widths Inner B	Ring Widths Outer C	S	L	d_1	B_2	B_1	F_1	O	P	Brg. and Collar Wt.		Static Load Rating C_o	Extended Dynamic Load Rating C_E
					in. **mm**	**mm** in.	**mm** in.	**mm** in.	**mm** in.	**mm** in.	**mm** in.	**mm** in.	**mm** in.	**mm** in.	**mm** in.	**mm** in.	**kg**	lbs.	**N** lbs.	**N** lbs.
–	1008KRR	(KRRB)	S1008K	203	½	**40** 1.5748	**27.78** 1 3/32	**12** 0.472	**13.90** 35/64	**4.0** 5/32	**28.6** 1 1/8	**13.5** 17/32	**37.3** 1 15/32	**34.01** 1.339	**16.56** 0.652	**14.27** 0.562	**0.154**	0.34	**4700** 1060	**10700** 2400
1010KR	1010KRR	(KRRB)	S1010K		5/8												**0.145**	0.32		
–	1011KRR	(KRRB)	S1011K		11/16												**0.122**	0.27		
–	E17KRR	(KRRB)	SE17K		**17**												**0.122**	0.27		
1012KR	1012KRR	(KRRB)	S1012K	204	¾	**47** 1.8504	**34.13** 1 11/32	**14** 0.551	**17.10** 43/64	**4.0** 5/32	**33.3** 1 5/16	**13.5** 17/32	**43.7** 1 23/32	**38.91** 1.532	**16.56** 0.652	**15.29** 0.602	**0.204**	0.45	**6200** 1400	**14300** 3200
–	E20KRR	(KRRB)	SE20K		**20**												**0.204**	0.45		
–	1013KRR	(KRRB)	S1013K	205	13/16	**52** 2.0472	**34.92** 1 3/8	**15** 0.591	**17.50** 11/16	**4.0** 5/32	**38.1** 1 1/2	**13.5** 17/32	**44.1** 1 47/64	**45.19** 1.779	**16.66** 0.656	**15.82** 0.623	**0.286**	0.63	**7700** 1730	**15800** 3550
–	1014KRR	(KRRB)	S1014K		7/8												**0.272**	0.60		
1015KR	1015KRR	(KRRB)	S1015K		15/16												**0.254**	0.56		
1100KR	1100KRR	(KRRB)	S1100K		1												**0.231**	0.51		
–	E25KRR	(KRRB)	SE25K		**25**												**0.231**	0.51		
–	1101	(KRRB)	S1101K	206	1 1/16	**62** 2.4409	**36.51** 1 7/16	**16** 0.630[1]	**18.30** 23/32	**4.0** 5/32	**44.4** 1 3/4	**15.9** 5/8	**48.4** 1 29/32	**52.53** 2.068	**19.56** 0.770	**17.78** 0.700	**0.413**	0.91	**11100** 2500	**21200** 4900
1102KR	1102KRR	(KRRB)	S1102K		1 1/8												**0.404**	0.89		
1103KR	1103KRR	(KRRB)	S1103K		1 3/16												**0.376**	0.83		
–	1103KRR3	(KRRB3)	S1103K3		1 1/4												**0.349**	0.77		
–	E30KRR	(KRRB)	SE30K		**30**												**0.376**	0.83		
1104KR	1104KRR	(KRRB)	S1104K	207	1 1/4	**72** 2.8346	**37.70** 1 31/64	**17** 0.669[2]	**18.85** 0.742	**4.0** 5/32	**54.0** 2 1/8	**17.1** 43/64	**51.2** 2 1/64	**60.55** 2.384	**19.69** 0.775	**18.34** 0.722	**0.653**	1.44	**15100** 3400	**28500** 6400
–	1105KRR	(KRRB)	S1105K		1 5/16												**0.603**	1.33		
–	1106KRR	(KRRB)	S1106K		1 3/8												**0.572**	1.26		
1107KR	1107KRR	(KRRB)	S1107K		1 7/16												**0.544**	1.20		
–	E35KRR	(KRRB)	SE35K		**35**												**0.572**	1.26		

[1]Spherical O.D. outer-ring width is 18 mm (0.709 in.).
[2]Spherical O.D. outer-ring width is 19 mm (0.748 in.).
[3]Spherical O.D. outer-ring width is 21 mm (0.827 in.).
[4]Available with spherical O.D. To order, add suffix B. Example 1115KRRB.
[5]Spherical O.D. outer-ring width is 22 mm (0.866 in.).
NOTE: Bore tolerances: ½ in. – 2 3/16 in. nominal to +0.013 mm, +0.0005;
2 ¼ in. – 2 15/16 in. nominal to +0.015 mm, +0.0006 in.

Continued on next page.

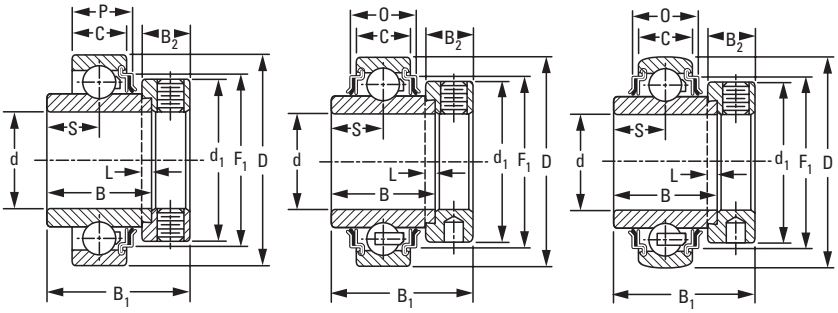

KR One Seal Cylindrical O.D. | **KRR Two Seals Cylindrical O.D.** | **KRRB Two Seals Spherical O.D.**

Continued from previous page.

Bearing No. Cylindrical O.D.	Bearing No. Cylindrical O.D.	Bearing No. Spherical O.D.	Collar No.	Basic Outer-Ring Size	Shaft Dia. d	O.D. D	Ring Widths Inner B	Ring Widths Outer C	S	L	d_1	B_2	B_1	F_1	O	P	Brg. and Collar Wt.		Static Load Rating C_o	Extended Dynamic Load Rating C_E
					in. **mm**	**mm** in.	**mm** in.	**mm** in.	**mm** in.	**mm** in.	**mm** in.	**mm** in.	**mm** in.	**mm** in.	**mm** in.	**mm** in.	**kg**	lbs.	**N** lbs.	**N** lbs.
1108KR	1108KRR	(KRRB)	S1108KT	208	1 1/2	**80**	**42.86**	**18**	**21.40**	**4.8**	**60.3**	**18.3**	**56.4**	**67.79**	**20.45**	**19.28**	**0.789**	1.74	**19600**	**36000**
–	1109KRR	(KRRB)	S1109KT		1 9/16	3.1496	1 11/16	0.709[3]	27/32	3/16	2 3/8	23/32	2 7/32	2.669	0.805	0.757	**0.739**	1.63	4400	8150
–	E40KRR	(KRRB)	SE40K		**40**												**0.739**	1.63		
–	1110KRR	(KRRB)	S1110K	209	1 5/8	**85**	**42.86**	**19**	**21.40**	**4.8**	**63.5**	**18.3**	**56.4**	**73.86**	**24.18**	**21.59**	**0.898**	1.98	**20000**	**36000**
1111KR	1111KRR	(KRRB)	S1111K		1 11/16	3.3465	1 11/16	0.748	27/32	3/16	2 1/2	23/32	2 7/32	2.908	0.952	0.850	**0.848**	1.87	4500	8150
1112KR	1112KRR	(KRRB)	S1112K		1 3/4												**0.825**	1.82		
–	E45KRR	(KRRB)	SE45K		**45**												**0.825**	1.82		
–	1114KRR	(KRRB)	S1114K	210	1 7/8	**90**	**49.21**	**20**	**24.60**	**4.8**	**69.9**	**18.3**	**62.7**	**77.7**	**24.51**	**22.25**	**1.057**	2.33	**22709**	**39000**
1115KR[4]	1115KRR	(KRRB)	S1115K		1 15/16	3.5433	1 15/16	0.787[5]	31/32	3/16	2 3/4	23/32	2 15/32	3.059	0.965	0.876	**1.000**	2.18	5100	8800
–	E50KRR	(KRRB)	SE50K		**50**												**1.000**	2.18		
1200KR	1200KRR	(KRRB)	S1200K	211	2	**100**	**55.56**	**21**	**27.80**	**4.8**	**76.2**	**20.6**	**71.4**	**87.17**	**27.41**	**24.21**	**1.520**	3.35	**28500**	**48000**
–	1202KRR	(KRRB)	S1202K		2 1/8	3.9370	2 3/16	0.827	1 3/32	3/16	3	13/16	2 13/16	3.432	1.079	0.953	**1.356**	2.99	6400	10800
1203KR	1203KRR	(KRRB)	S1203K		2 3/16												**1.306**	2.88		
–	E55KRR	(KRRB)	SE55K		**55**												**1.306**	2.88		
–	1204KRR	(KRRB)	S1204K	212	2 1/4	**110**	**61.91**	**22**	**31.00**	**6.4**	**84.1**	**22.2**	**77.8**	**94.89**	**30.02**	**26.01**	**1.715**	3.78	**35600**	**58500**
1207KR	1207KRR	(KRRB)	S1207K		2 7/16	4.3307	2 7/16	0.866	1 7/32	1/4	3 5/16	7/8	3 1/16	3.736	1.182	1.024	**1.565**	3.45	8000	13200
–	E60KRR	(KRRB)	SE60K		**60**												**1.615**	3.56		
–	1215KRR	(KRRB)	S1215K	215	2 15/16	**130**	**74.61**	**25**	**37.30**	**6.4**	**101.6**	**23.8**	**91.2**	**113.13**	**34.03**	–	**2.640**	5.82	**43600**	**69500**
	E75KRR	(KRRB)	SE75K		**75**	5.1181	2 15/16	0.984	1 15/32	1/4	4	15/16	3 5/8	4.454	1.340		**2.640**	5.82	9800	15600

[1]Spherical O.D. outer-ring width is 18 mm (0.709 in.).
[2]Spherical O.D. outer-ring width is 19 mm (0.748 in.).
[3]Spherical O.D. outer-ring width is 21 mm (0.827 in.).
[4]Available with spherical O.D. To order, add suffix B. Example 1115KRRB.
[5]Spherical O.D. outer-ring width is 22 mm (0.866 in.).
NOTE: Bore tolerances: 1/2 in. – 2 3/16 in. nominal to +0.013 mm, +0.0005;
2 1/4 in. – 2 15/16 in. nominal to +0.015 mm, +0.0006 in.

G-KRR, G-KRRB RELUBRICATABLE TYPES

- The G-KRR-series wide-inner-ring ball bearings are the same as the RR series and have a provision for relubrication.
- These bearings are designed for extremely dirty or wet conditions.
- The bearing includes R-seals with flared lips that firmly contact the ground O.D. of the inner ring. The inner ring provides a positive seal against dust, dirt and other contaminants, and effectively retains the lubricant.
- G-KRR-series bearings are equipped with shroud-seals, providing extra effectiveness and protection.
- The extra-wide design provides additional shaft support and extra-large grease capacity.

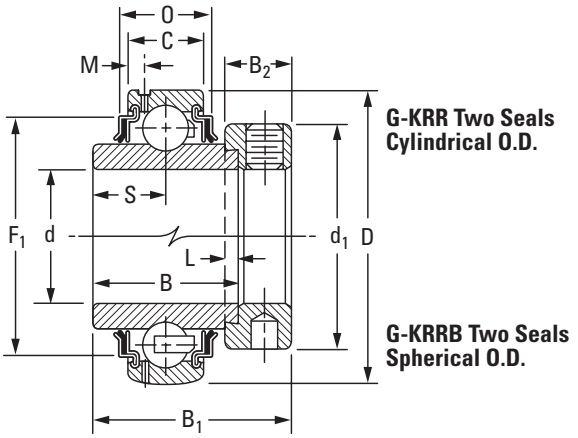

Suggested shaft tolerances:

½ in. – 1 15/16 in., nominal to -0.013 mm, -0.0005 in.;

2 in. – 2 15/16 in., nominal to -0.025 mm, -0.0010 in.

To order, specify bearing number followed by "+ COL".

Example: G1010KRRB + COL.

Bearing No. Cylindrical O.D.	Bearing No. Spherical O.D.	Collar No.	Basic Outer-Ring Size	Shaft Dia. d	O.D. D	Ring Widths Inner B	Ring Widths Outer C	S	L	d_1	B_2	M	B_1	F_1	O	Brg. and Collar Wt.		Static Load Rating C_o	Extended Dynamic Load Rating C_E
				in. mm	mm in.	mm in.	mm in.	mm in.	mm in.	mm in.	mm in.	mm in.	mm in.	mm in.	mm in.	kg	lbs.	N lbs.	N lbs.
–	G1008KRRB	S1008K		½												**0.154**	0.34		
–	G1009KRRB	S1009K		9/16												**0.141**	0.31		
G1010KRR	G1010KRRB	S1010K	203	5/8	**40** 1.5748	**27.78** 1 3/32	**12** 0.472	**13.90** 35/64	**4.0** 5/32	**28.6** 1 1/8	**13.5** 17/32	**2.72** 0.107	**37.3** 1 15/32	**34.01** 1.339	**16.56** 0.652	**0.141**	0.31	**4700** 1060	**10700** 2400
G1011KRR	G1011KRRB	S1011K		11/16												**0.118**	0.26		
GE17KRR	GE17KRRB	SE17K		**17**												**0.118**	0.26		
G1012KRR	G1012KRRB	S1012K	204	3/4	**47** 1.8504	**34.13** 1 11/32	**14** 0.551	**17.10** 43/64	**4.0** 5/32	**33.3** 1 5/16	**13.5** 17/32	**3.43** 0.135	**43.7** 1 23/32	**38.91** 1.532	**17.30** 0.681	**0.204**	0.45	**6200** 1400	**14300** 3200
GE20KRR	GE20KRRB	SE20K		**20**												**0.204**	0.45		
–	G1013KRRB	S1013K		13/16												**0.286**	0.63		
G1014KRR	G1014KRRB	S1014K		7/8												**0.263**	0.58		
G1015KRR	G1015KRRB	S1015K	205	15/16	**52** 2.0472	**34.92** 1 3/8	**15** 0.591	**17.50** 11/16	**4.0** 5/32	**38.1** 1 1/2	**13.5** 17/32	**3.86** 0.152	**44.4** 1 3/4	**45.19** 1.779	**16.66** 0.656	**0.240**	0.53	**7700** 1730	**15800** 3550
G1100KRR	G1100KRRB	S1100K		1												**0.227**	0.50		
GE25KRR	GE25KRRB	SE25K		**25**												**0.227**	0.50		
G1101KRR	G1101KRRB	S1101K		1 1/16												**0.417**	0.92		
G1102KRR	G1102KRRB	S1102K		1 1/8												**0.404**	0.89		
G1103KRR	G1103KRRB	S1103K	206	1 3/16	**62** 2.4409	**36.51** 1 7/16	**18** 0.709	**18.30** 23/32	**4.0** 5/32	**44.1** 1 47/64	**15.9** 5/8	**3.96** 0.156	**48.4** 1 29/32	**52.53** 2.068	**21.56** 0.849	**0.376**	0.83	**11100** 2500	**21800** 4900
–	G1103KRRB3	S1103K3		1 1/4												**0.349**	0.77		
GE30KRR	GE30KRRB	SE30K		**30**												**0.376**	0.83		
G1104KRR	G1104KRRB	S1104K		1 1/4												**0.653**	1.44		
–	G1105KRRB	S1105K		1 5/16												**0.617**	1.36		
G1106KRR	G1106KRRB	S1106K	207	1 3/8	**72** 2.8346	**37.70** 1 31/64	**19** 0.748	**18.85** 0.742	**4.0** 5/32	**54.0** 2 1/8	**17.1** 43/64	**3.68** 0.145	**51.2** 2 1/64	**60.55** 2.384	**21.74** 0.856	**0.585**	1.29	**15100** 3400	**28500** 6400
G1107KRR	G1107KRRB	S1107K		1 7/16												**0.562**	1.24		
GE35KRR	GE35KRRB	SE35K		**35**												**0.585**	1.29		
G1108KRR	G1108KRRB	S1108KT		1 1/2												**0.812**	1.79		
–	G1109KRRB	S1109KT	208	1 9/16	**80** 3.1496	**42.86** 1 11/16	**21** 0.827	**21.40** 27/32	**4.8** 3/16	**60.3** 2 3/8	**18.3** 23/32	**4.06** 0.160	**56.4** 2 7/32	**67.79** 2.669	**23.44** 0.923	**0.771**	1.70	**19600** 4400	**36000** 8150
GE40KRR	GE40KRRB	SE40K		**40**												**0.771**	1.70		

(1)Spherical O.D. outer-ring width is 22 mm, 0.866 in. 2 1/4 in. – 2 15/16 in., nominal to 0.015 mm, +0.0006 in.
(2)Spherical O.D. outer-ring width is 24 mm (0.945 in.).
NOTE: Bore tolerances: 1/2 in. – 2 3/16 in., nominal to +0.013 mm, +0.0005 in.

Continued on next page.

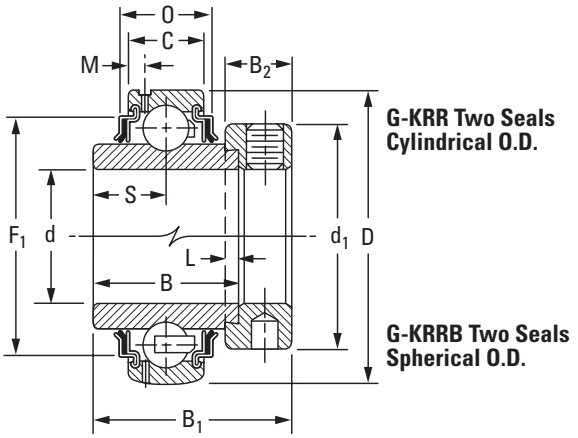

Continued from previous page.

Bearing No. Cylindrical O.D.	Bearing No. Spherical O.D.	Collar No.	Basic Outer-Ring Size	Shaft Dia. d	O.D. D	Ring Widths Inner B	Ring Widths Outer C	S	L	d_1	B_2	M	B_1	F_1	O	Brg. and Collar Wt.		Static Load Rating C_o	Extended Dynamic Load Rating C_E
				in. **mm**	**mm** in.	**mm** in.	**mm** in.	**mm** in.	**mm** in.	**mm** in.	**mm** in.	**mm** in.	**mm** in.	**mm** in.	**mm** in.	**kg**	lbs.	**N** lbs.	**N** lbs.
G1110KRR	G1110KRRB	S1110K	209	1 5/8	**85** 3.3465	**42.86** 1 11/16	**22** 0.866	**21.40** 27/32	**4.8** 3/16	**63.5** 2 1/2	**18.3** 23/32	**4.55** 0.179	**56.4** 2 7/32	**73.86** 2.908	**27.18** 1.07	**0.925**	2.04	**20500** 4600	**36300** 8160
G1111KRR	G1111KRRB	S1111K		1 11/16												**0.880**	1.94		
G1112KRR	G1112KRRB	S1112K		1 3/4												**0.835**	1.84		
GE45KRR	GE45KRRB	SE45K		**45**												**0.835**	1.84		
–	G1113KRR	S1113K	210	1 13/16	**90** 3.5433	**49.21** 1 15/16	**23** 0.903[1]	**24.60** 31/32	**4.8** 3/16	**69.9** 2 3/4	**18.3** 23/32	**4.70** 0.185	**62.7** 2 15/32	**77.70** 3.059	**27.51** 1.083	**1.116**	2.46	**22700** 5100	**39200** 8800
–	G1114KRRB	S1114K		1 7/8												**1.034**	2.28		
G1115KRR	G1115KRRB	S1115K		1 15/16												**1.016**	2.24		
GE50KRR	GE50KRRB	SE50K		**50**												**1.016**	2.24		
G1200KRR	G1200KRRB	S1200K	211	2	**100** 3.9370	**55.56** 2 3/16	**25** 0.983[2]	**27.80** 1 3/32	**4.8** 3/16	**76.2** 3	**20.6** 13/16	**5.00** 0.197	**71.4** 2 13/16	**87.17** 3.432	**29.01** 1.142	**1.583**	3.49	**28500** 6400	**48000** 10800
–	G1201KRRB	S1201K		2 1/16												**1.470**	3.24		
–	G1202KRRB	S1202K		2 1/8												**1.406**	3.10		
G1203KRR	G1203KRRB	S1203K		2 3/16												**1.365**	3.01		
GE55KRR	GE55KRRB	SE55K		**55**												**1.365**	3.01		
–	G1204KRRB	S1204K	212	2 1/4	**110** 4.3307	**61.91** 2 7/16	**27** 1.063	**31.00** 1 7/32	**6.4** 1/4	**84.1** 3 5/16	**22.2** 7/8	**5.13** 0.202	**77.8** 3 1/16	**94.89** 3.736	**35.03** 1.379	**2.041**	4.50	**35600** 8000	**58800** 13200
–	G1205KRRB	S1205K		2 5/16												**1.923**	4.24		
–	G1206KRRB	S1206K		2 3/8												**1.846**	4.07		
G1207KRR	G1207KRRB	S1207K		2 7/16												**1.778**	3.92		
GE60KRR	GE60KRRB	SE60K		**60**												**1.846**	4.07		
–	G1210KRRB	S1210K	214	2 5/8	**125** 4.9213	**68.26** 2 11/16	**28** 1.102	**34.10** 1 11/32	**6.4** 1/4	**96.8** 3 13/16	**23.8** 15/16	**5.08** 0.200	**79.4** 3 1/8	**109.17** 4.298	**35.94** 1.415	**2.681**	5.91	**43000** 9650	**69500** 15600
–	G1211KRRB	S1211K		2 11/16												**2.585**	5.70		
–	GE70KRRB	SE70K		**70**												**2.585**	5.70		
–	G1212KRRB	S1212K	215	2 3/4	**130** 5.1181	**74.61** 2 15/16	**29** 1.142	**37.30** 1 15/32	**6.4** 1/4	**101.6** 4	**23.8** 15/16	**5.56** 0.219	**92.1** 3 5/8	**113.13** 4.454	**38.03** 1.497	**3.084**	6.80	**43600** 9800	**69500** 15600
–	G1213KRRB	S1213K		2 13/16												**2.976**	6.56		
–	G1214KRRB	S1214K		2 7/8												**2.867**	6.32		
–	G1215KRRB	S1215K		2 15/16												**2.753**	6.07		
–	GE75KRRB	SE75K		**75**												**2.753**	6.07		

[1]Spherical O.D. outer-ring width is 22 mm, 0.866 in. 2 1/4 in. – 2 15/16 in., nominal to 0.015 mm, +0.0006 in.
[2]Spherical O.D. outer-ring width is 24 mm (0.945 in.).
NOTE: Bore tolerances: 1/2 in. – 2 3/16 in., nominal to +0.013 mm, +0.0005 in.

KL, KLB, KLL, KLLB SPECIAL SERIES, NON-RELUBRICATABLE TYPES

- These wide-inner-ring ball bearings have either one or two Mechani-Seals.
- Types KLB and KLLB have spherical outside diameters permitting self-alignment when mounted in a housing with a corresponding spherical seat.
- All four types are prelubricated at the factory and require no further lubrication.
- These bearings are suitable for higher-speed and/or higher-temperature applications.
- Because they incorporate non-contact seals, these bearings have very low rotational torque.

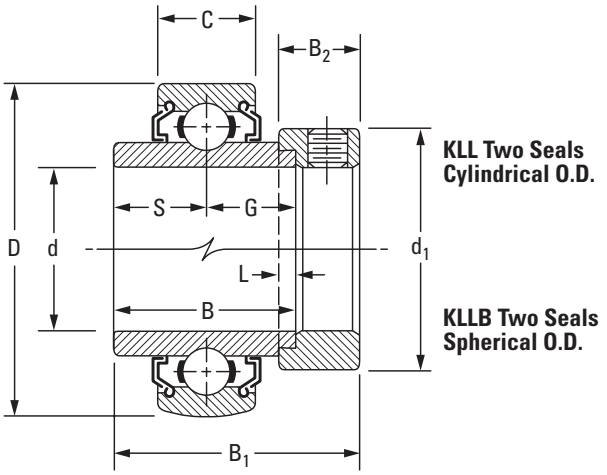

Suggested shaft tolerances:

1/2 in. – 1 15/16 in., nominal to -0.013 mm, -0.0005 in.;
2 in. – 2 15/16 in., nominal to -0.025 mm, -0.0010 in.

To order, specify bearing number followed by "+ COL".

Example: 1100KLL + COL.

Bearing No. Cylindrical O.D.	Bearing No. Spherical O.D.	Collar No.	Basic Outer-Ring Size	Shaft Dia. d	O.D. D	Ring Widths Inner B	Ring Widths Outer C	S(G)	L	d_1	B_2	B_1	Brg. and Collar Wt.	Static Load Rating C_o	Extended Dynamic Load Rating C_E
				in.	mm in.	mm in.	mm in.	mm in.	mm in.	mm in.	mm in.	mm in.	kg lbs.	N lbs.	N lbs.
1008KL	1008KLL (KLLB)	S1008K	203	1/2	40 1.5748	27.78 1 3/32	12 0.4724	13.89 35/64	3.97 5/32	28.58 1 1/8	13.49 17/32	37.31 1 15/32	0.168 0.37	4700 1060	10700 2400
–	1009KLL –	S1009K		9/16									0.163 0.36		
1010KL	1010KLL (KLLB)	S1010K		5/8									0.141 0.31		
1011KL	1011KLL (KLLB)	S1011K		11/16									0.122 0.27		
1012KL	1012KLL (KLLB)	S1012K	204	3/4	47 1.8504	34.13 1 11/32	14 0.5512	17.06 43/64	3.97 5/32	33.34 1 5/16	13.50 17/32	43.70 1 23/32	0.209 0.46	6200 1400	14300 3200
–	– –	S1013K	205	13/16	52 2.0472	34.92 1 3/8	15 0.5906	17.46 11/16	3.97 5/32	38.10 1 1/2	13.49 17/32	44.45 1 47/64	0.286 0.63	7700 1730	15800 3550
1014KL	1014KLL (KLLB)	S1014K		7/8									0.277 0.61		
1015KL	1015KLL (KLLB)	S1015K		15/16									0.254 0.56		
1100KL (KLB)	1100KLL (KLLB)	S1100K		1									0.250 0.55		
1101KL	– –	S1101K	206	1 1/16	62 2.4409	36.51 1 7/16	16 0.6299[1]	18.26 23/32	3.97 5/32	44.10 1 3/4	15.88 5/8	48.42 1 29/32	0.417 0.92	11100 2500	21800 4900
1102KL	1102KLL (KLLB)	S1102K		1 1/8									0.413 0.91		
1103KL (KLB)	1103KLL (KLLB)	S1103K		1 3/16									0.372 0.82		
1103KL3	1103KLL3 (KLLB3)	S1103K3		1 1/4									0.358 0.79		
1104KL	1104KLL (KLLB)	S1104K	207	1 1/4	72 2.8346	37.70 1 31/64	17 0.6693[2]	18.85 0.742	3.97 5/32	54.00 2 1/8	17.46 43/64	51.20 2 1/64	0.649 1.43	15100 3400	28500 6400
–	1105KLL (KLLB)	S1105K		1 5/16									0.617 1.36		
1106KL	1106KLL (KLLB)	S1106K		1 3/8									0.581 1.28		
1107KL (KLB)	1107KLL (KLLB)	S1107K		1 7/16									0.544 1.20		
1108KL (KLB)	1108KLL (KLLB)	S1108K	208	1 1/2	80 3.1496	42.86 1 11/16	18 0.7087[3]	21.43 27/32	4.76 3/16	60.32 2 3/8	18.26 23/32	56.36 2 7/32	0.821 1.81	17600 4000	36200 8130
–	1109KLL (KLLB)	S1109K		1 9/16									0.767 1.69		
1110KL	1110KLL (KLLB)	S1110K	209	1 5/8	85 3.3465	42.86 1 11/16	19 0.7480	21.43 27/32	4.76 3/16	60.35 2 1/2	18.26 23/32	56.36 2 7/32	0.934 2.06	20000 4500	36300 8160
1111KL	1111KLL (KLLB)	S1111K		1 11/16									0.890 1.96		
1112KL (KLB)	1112KLL (KLLB)	S1112K		1 3/4									0.844 1.86		
1114KL	1114KLL (KLLB)	S1114K	210	1 7/8	90 3.5433	49.21 1 15/16	20 0.7874	24.61 31/32	4.76 3/16	69.90 2 3/4	18.26 23/32	62.71 2 15/32	1.075 2.37	22700 5100	39000 8800
1115KL (KLB)	1115KLL (KLLB)	S1115K		1 15/16									1.021 2.25		
1200KL (KLB)	1200KLL (KLLB)	S1200K	211	2	100 3.9370	55.56 2 3/16	21 0.8268	27.98 1 3/32	4.76 3/16	76.20 3	20.64 13/16	71.44 2 13/16	1.540 3.40	28500 6400	48000 10800
–	1202KLL (KLLB)	S1202K		2 1/8									1.406 3.10		
1203KL	1203KLL (KLLB)	S1203K		2 3/16									1.347 2.97		
1207KL	– –	S1207K	212	2 7/16	110 4.3307	61.91 2 7/16	22 0.8661	30.96 1 7/32	6.35 1/4	84.14 3 5/16	22.22 7/8	77.79 3 1/16	1.660 3.66	35600 8000	58500 13200
–	1215KLL (KLLB)	S1215K	215	2 15/16	130 5.1181	74.61 2 15/16	25 0.9843	37.31 1 15/32	6.35 1/4	101.6 4	23.81 15/16	91.08 3 5/8	2.268 5.00	43600 9800	69500 15600

[1]Spherical O.D. outer-ring width is 18 mm (0.7087 in.).
[2]Spherical O.D. outer-ring width is 19 mm (0.7480 in.).
[3]Spherical O.D. outer-ring width is 21 mm (0.8268 in.).
NOTE: Bore tolerance: 1/2 in. – 2 3/16 in., nominal to +0.013 mm, +0.0005 in.
2 7/16 in. – 2 15/16 in., nominal to +0.015 mm, +0.0006 in.

G-KLL, G-KLLB SPECIAL SERIES, RELUBRICATABLE TYPES

- These wide-inner-ring ball bearings have two Mechani-Seals and a provision for relubrication.
- Type G-KLL has a cylindrical outside diameter.
- Type G-KLLB has a spherical outside diameter.
- Both are generally suitable for higher-speed and/or higher-temperature applications.
- Because they incorporate non-contact seals, these bearings have very low rotational torque.
- Consult your Timken engineer for suggestions.

Suggested shaft tolerances:

1/2 in. – 1 15/16 in., nominal to -0.013 mm, -0.0005 in.;
2 in. – 2 15/16 in., nominal to -0.025 mm, -0.0010 in.

To order, specify bearing number followed by "+ COL".
Example: G1015KLL + COL.

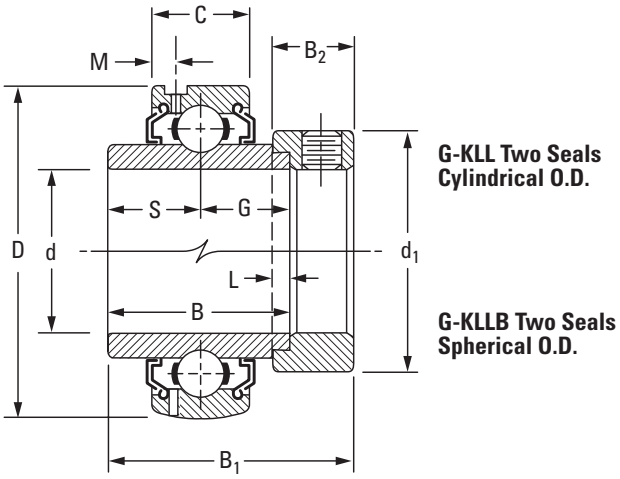

Bearing No. Cylindrical O.D.	Bearing No. Spherical O.D.	Collar No.	Basic Outer-Ring Size	Shaft Dia. d	O.D. D	Ring Widths Inner B	Ring Widths Outer C	S(G)	L	d_1	B_2	M	B_1	Brg. and Collar Wt.		Static Load Rating C_o	Extended Dynamic Load Rating C_E
				in.	mm in.	mm in.	mm in.	mm in.	mm in.	mm in.	mm in.	mm in.	mm in.	kg	lbs.	N lbs.	N lbs.
–	G1008KLLB	S1008K	203	1/2										0.150	0.33		
–	G1009KLLB	S1009K		9/16	40	27.78	12	13.90	4.0	28.6	13.50	2.720	37.30	0.136	0.30	4700	10700
G1010KLL	G1010KLLB	S1010K		5/8	1.5748	1 3/32	0.4724	35/64	5/32	1 1/8	17/32	0.107	1 15/32	0.141	0.31	1060	2400
G1011KLL	G1011KLLB	S1011K		11/16										0.118	0.26		
G1012KLL	G1012KLLB	S1012K	204	3/4	47 1.8504	34.13 1 11/32	14 0.5512	17.10 43/64	4.0 5/32	33.3 1 5/16	13.50 17/32	3.430 0.135	43.70 1 23/32	0.200	0.44	6200 1400	14300 3200
–	G1013KLLB	S1013K	205	13/16										0.286	0.63		
G1014KLL	G1014KLLB	S1014K		7/8	52	34.92	15	17.50	4.0	38.1	13.50	3.860	44.45	0.263	0.58	7700	15800
G1015KLL	G1015KLLB	S1015K		15/16	2.0472	1 3/8	0.5906	11/16	5/32	1 1/2	17/32	0.152	1 3/4	0.245	0.54	1730	3550
G1100KLL	G1100KLLB	S1100K		1										0.222	0.49		
G1101KLL	–	S1101K	206	1 1/16										0.422	0.93		
G1102KLL	G1102KLLB	S1102K		1 1/8	62	36.51	18	18.30	4.0	44.4	15.90	3.960	48.40	0.413	0.91	11100	21800
G1103KLL	G1103KLLB	S1103K		1 3/16	2.4409	1 7/16	0.7087	23/32	5/32	1 3/4	5/8	0.156	1 29/32	0.395	0.87	2500	4900
–	G1103KLLB3	S1103K3		1 1/4										0.340	0.75		
G1104KLL	G1104KLLB	S1104K	207	1 1/4										0.649	1.43		
–	G1105KLLB	S1105K		1 5/16	72	37.70	19	18.85	4.0	54.0	17.46	3.430	51.20	0.622	1.37	15100	28500
G1106KLL	G1106KLLB	S1106K		1 3/8	2.8346	1 31/64	0.7480	0.742	5/32	2 1/8	11/16	0.135	2 1/64	0.590	1.30	3400	6400
G1107KLL	G1107KLLB	S1107K		1 7/16										0.549	1.21		
G1108KLL	G1108KLLB	S1108KT	208	1 1/2	80	42.86	21	21.40	4.8	60.3	18.30	4.060	56.40	0.826	1.82	17600	36200
G1109KLL	G1109KLLB	S1109KT		1 9/16	3.1496	1 11/16	0.8268	27/32	3/16	2 3/8	23/32	0.160	2 7/32	0.785	1.73	4000	8130
G1110KLL	G1110KLLB	S1110K	209	1 5/8	85	42.86	22	21.40	4.8	63.5	18.30	4.550	56.40	0.949	2.09	20000	36300
G1111KLL	G1111KLLB	S1111K		1 11/16	3.3465	1 11/16	0.8661	27/32	3/16	2 1/2	23/32	0.179	2 7/32	0.899	1.98	4500	8160
G1112KLL	G1112KLLB	S1112K		1 3/4										0.853	1.88		
–	G1113KLLB	S1113K	210	1 13/16	90	49.21	23	24.60	4.8	69.9	18.30	4.700	62.70	1.148	2.53	22700	39000
G1114KLL	G1114KLLB	S1114K		1 7/8	3.5433	1 15/16	0.9055	31/32	3/16	2 3/4	23/32	0.185	2 15/32	1.090	2.40	5100	8800
G1115KLL	G1115KLLB	S1115K		1 15/16										1.031	2.27		
G1200KLL	G1200KLLB	S1200K	211	2										1.593	3.51		
–	G1201KLLB	S1201K		2 1/16	100	55.56	24	27.80	4.8	76.2	20.60	5.000	71.40	1.512	3.33	28500	48000
–	G1202KLLB	S1202K		2 1/8	3.9370	2 3/16	0.9450	1 3/32	3/16	3	13/16	0.197	2 13/16	1.416	3.12	6400	10800
G1203KLL	G1203KLLB	S1203K		2 3/16										1.285	2.83		
G1204KLL	G1204KLLB	S1204K	212	2 1/4										2.030	4.47		
–	G1205KLLB	S1205K		2 5/16	110	61.91	27	31.00	6.4	84.1	22.20	5.130	77.80	1.938	4.27	35600	58500
–	G1206KLLB	S1206K		2 3/8	4.3307	2 7/16	1.0630	1 7/32	1/4	3 5/16	7/8	0.202	3 1/16	1.852	4.08	8000	13200
–	G1207KLLB	S1207K		2 7/16										1.789	3.94		
–	G1215KLLB	S1215K	215	2 15/16	130 5.1181	74.61 2 15/16	25 0.9843	37.30 1 15/32	6.4 1/4	101.6 4	23.80 15/16	5.560 0.219	91.20 3 5/8	2.837	6.25	43600 9800	69500 15600

NOTE: Bore tolerance: 1/2 in. – 2 3/16 in., nominal to +0.013 mm, +0.0005 in.
2 1/4 in. – 2 15/16 in., nominal to +0.015 mm, +0.0006 in.

KLLG SPECIAL SERIES WITH WIRELOC®

- KLLG wide-inner-ring ball bearings are the same as the KLL type, except for a snap ring, or Wireloc®, in the outer ring.
- The Wireloc mounting provides a convenient method of positively locating a bearing axially.

Suggested shaft tolerances:

½ in. – 1 15/16 in., nominal to -0.013 mm, -0.0005 in.;

2 in. – 2 7/16 in., nominal to -0.025 mm, -0.0010 in.

To order, specify bearing number followed by "+ COL".

Example: 1008KLLG + COL.

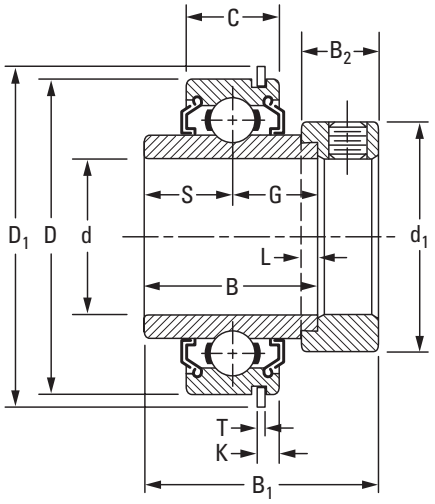

Bearing No.	Collar No.	Basic Outer-Ring Size	Shaft Dia. d	O.D. D	Ring Widths Inner B	Ring Widths Outer C	S(G)	L	d_1	B_2	B_1	Snap Ring Dimensions D_1	Snap Ring Dimensions T	Snap Ring Dimensions K	Brg. and Collar Wt.		Static Load Rating C_o	Extended Dynamic Load Rating C_E
			in.	mm in.	mm in.	mm in.	mm in.	mm in.	mm in.	mm in.	mm in.	mm in.	mm in.	mm in.	kg	lbs.	N lbs.	N lbs.
1008KLLG	S1008K	203	½	40 1.5748	27.78 1 3/32	12 0.4724	13.90 35/64	4.0 5/32	28.6 1 1/8	13.5 17/32	37.3 1 15/32	44.45 1 3/4	1.07 0.042	3.05 0.120	0.173	0.38	4700 1060	10700 2400
1009KLLG	S1009K		9/16												0.154	0.34		
1010KLLG	S1010K		5/8												0.141	0.31		
1011KLLG	S1011K		11/16												0.132	0.29		
1012KLLG	S1012K	204	3/4	47 1.8504	34.13 1 11/32	14 0.5512	17.10 43/64	4.0 5/32	33.3 1 5/16	13.5 17/32	43.7 1 23/32	52.39 2 1/16	1.07 0.042	3.45 0.136	0.204	0.45	6200 1400	14300 3200
1013KLLG	S1013K	205	13/16	52 2.0472	34.92 1 3/8	15 0.5906	17.50 11/16	4.0 5/32	38.1 1 1/2	13.5 17/32	44.1 1 47/64	57.55 2 17/64	1.07 0.042	3.45 0.136	0.272	0.60	7700 1730	15800 3550
1014KLLG	S1014K		7/8												0.263	0.58		
1015KLLG	S1015K		15/16												0.245	0.54		
1100KLLG	S1100K		1												0.227	0.50		
1101KLLG	S1101K	206	1 1/16	62 2.4409	36.51 1 7/16	16 0.6299	18.30 23/32	4.0 5/32	44.4 1 3/4	15.9 5/8	48.4 1 29/32	67.47 2 21/32	1.65 0.065	4.83 0.190	0.427	0.94	11100 2500	21800 4900
1102KLLG	S1102K		1 1/8												0.386	0.85		
1103KLLG	S1103K		1 3/16												0.386	0.85		
1104KLLG	S1104K	207	1 1/4	72 2.8346	37.70 1 31/64	17 0.6693	18.85 0.742	4.0 5/32	54.0 2 1/8	17.1 43/64	51.2 2 1/64	78.18 3 5/64	1.65 0.065	4.83 0.190	0.645	1.42	15100 3400	28500 6400
1105KLLG	S1105K		1 5/16												0.604	1.33		
1106KLLG	S1106K		1 3/8												0.577	1.27		
1107KLLG	S1107K		1 7/16												0.540	1.19		
1108KLLG	S1108KT	208	1 1/2	80 3.1496	42.86 1 11/16	18 0.7087	21.40 27/32	4.8 3/16	60.3 2 3/8	18.3 23/32	56.4 2 7/32	86.52 3 13/32	1.65 0.065	4.83 0.190	0.826	1.82	17600 4000	36200 8130
1109KLLG	S1109KT		1 9/16												0.785	1.73		
1110KLLG	S1110K	209	1 5/8	85 3.3465	42.86 1 11/16	19 0.7480	21.40 27/32	4.8 3/16	63.5 2 1/2	18.3 23/32	56.4 2 7/32	91.28 3 19/32	1.65 0.065	4.83 0.190	0.922	2.03	20000 4500	36300 8160
1111KLLG	S1111K		1 11/16												0.881	1.94		
1112KLLG	S1112K		1 3/4												0.844	1.86		
1113KLLG	S1113K	210	1 13/16	90 3.5433	49.21 1 15/16	20 0.7874	24.60 31/32	4.8 3/16	69.9 2 3/4	18.3 23/32	62.7 2 15/32	96.44 3 51/64	2.41 0.095	5.59 0.220	1.035	2.28	22700 5100	39000 8800
1114KLLG	S1114K		1 7/8												1.003	2.21		
1115KLLG	S1115K		1 15/16												0.971	2.14		
1200KLLG	S1200K	211	2	100 3.9370	55.56 2 3/16	21 0.8268	27.80 1 3/32	4.8 3/16	76.2 3	20.6 13/16	71.4 2 13/16	106.36 4 3/16	2.41 0.095	5.59 0.220	1.475	3.25	28500 6400	48000 10800
1201KLLG	S1201K		2 1/16												1.444	3.18		
1202KLLG	S1202K		2 1/8												1.380	3.08		
1203KLLG	S1203K		2 3/16												1.353	2.98		
1204KLLG	S1204K	212	2 1/4	110 4.3307	61.91 2 7/16	22 0.8661	30.96 1 7/32	6.4 1/4	84.1 3 5/16	22.2 7/8	77.8 3 1/16	116.28 4 37/64	2.41 0.095	5.59 0.220	1.793	3.95	35600 8000	58500 13200
1205KLLG	S1205K		2 5/16												1.743	3.84		
1206KLLG	S1206K		2 3/8												1.711	3.77		
1207KLLG	S1207K		2 7/16												1.684	3.71		

NOTE: Bore tolerance: ½ in. – 2 3/16 in., nominal to +0.013 mm, +0.0005 in.
2 1/4 in. – 2 7/16 in., nominal to +0.015 mm, +0.0006 in.

TRI-PLY SEAL INDUSTRIAL SERIES, NON-RELUBRICATABLE AND RELUBRICATABLE TYPES

- Tri-ply seal bearings are dimensionally interchangeable with KRRB bearings and can be used with standard housings.
- One-piece tri-ply seals incorporate a highly effective seal design molded to an exterior shroud cap. The shroud cap protects the seal lip from fiber wrap and abrasion.
- Supplied with a self-locking collar, the bearings are most effective in environments with severe contamination and moisture.
- Relubricatable tri-ply seal bearings are dimensionally interchangeable with G-KRRB bearings.
- This design can be used with standard housings.

Suggested shaft tolerances:

- Heavy loads – nominal to -0.025 mm, -0.001 in.;
- Light loads – nominal to -0.050 mm, -0.002 in.

To order, specify bearing number followed by "+ COL".
Example: G1115KPPB3 + COL.

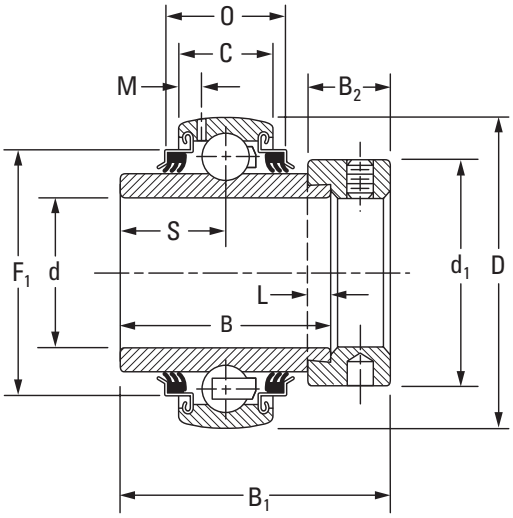

Bearing No. Relubricatable Type	Bearing No. Non-Relubricatable Type	Basic Outer-Ring Size	Shaft Dia. d	O.D. D	Ring Widths Inner B	Ring Widths Outer C	L	d_1	B_2	S	B_1	M[1]	F_1	O	Brg. and Collar Wt.		Static Load Rating C_o	Extended Dynamic Load Rating C_E
Spherical O.D.																		
			in. **mm**	**mm** in.	**mm** in.	**mm** in.	**mm** in.	**mm** in.	**mm** in.	**mm** in.	**mm** in.	**mm** in.	**mm** in.	**mm** in.	**kg**	lbs.	**N** lbs.	**N** lbs.
G1013KPPB3	1013KPPB3	205	13/16	**52** 2.0472	**34.92** 1 3/8	**15** 0.591	**3.9** 5/32	**38.1** 1 1/2	**13.5** 17/32	**17.50** 11/16	**44.4** 1 3/4	**3.61** 0.142	**45.19** 1.779	**16.66** 0.656	**0.286**	0.63	**7700** 1730	**15800** 3550
G1014KPPB3	1014KPPB3		7/8												**0.272**	0.60		
G1015KPPB3	1015KPPB3		15/16												**0.254**	0.56		
G1100KPPB3	1100KPPB3		1												**0.231**	0.51		
GE25KPPB3	E25KPPB3		**25**												**0.231**	0.51		
G1101KPPB3	1101KPPB3	206	1 1/16	**62** 2.4409	**36.51** 1 7/16	**18** 0.709	**3.9** 5/32	**44.4** 1 3/4	**15.9** 5/8	**18.30** 23/32	**48.4** 1 29/32	**4.19** 0.156	**52.53** 2.068	**21.56** 0.849	**0.413**	0.91	**11100** 2500	**21800** 4900
G1102KPPB3	1102KPPB3		1 1/8												**0.404**	0.89		
G1103KPPB3	1103KPPB3		1 3/16												**0.376**	0.83		
G1103KPPB4	1103KPPB4		1 1/4												**0.349**	0.77		
GE30KPPB3	E30KPPB3		**30**												**0.376**	0.83		
G1104KPPB2	1104KPPB2	207	1 1/4	**72** 2.8346	**37.70** 1 31/64	**19** 0.748	**3.9** 5/32	**54.0** 2 1/8	**17.1** 43/64	**18.85** 0.742	**51.2** 2 1/64	**3.68** 0.145	**60.35** 2.376	**25.40** 1.000	**0.653**	1.44	**15100** 3400	**28500** 6400
G1105KPPB2	1105KPPB2		1 5/16												**0.603**	1.33		
G1106KPPB2	1106KPPB2		1 3/8												**0.572**	1.26		
G1107KPPB2	1107KPPB2		1 7/16												**0.544**	1.20		
GE35KPPB2	E35KPPB2		**35**												**0.572**	1.26		
G1108KPPB3	1108KPPB3	208	1 1/2	**80** 3.1496	**42.86** 1 11/16	**21** 0.827	**4.8** 3/16	**60.3** 2 3/8	**18.3** 23/32	**21.40** 27/32	**56.4** 2 7/32	**5.66** 0.223	**67.79** 2.669	**23.44** 0.923	**0.789**	1.74	**19800** 4460	**20500** 4600
G1109KPPB3	1109KPPB3		1 9/16												**0.739**	1.63		
GE40KPPB3	E40KPPB3		**40**												**0.739**	1.63		
G1110KPPB4	1110KPPB4	209	1 5/8	**85** 3.3465	**42.86** 1 11/16	**22** 0.866	**4.8** 3/16	**63.5** 2 1/2	**18.3** 23/32	**21.40** 27/32	**56.4** 2 7/32	**4.55** 0.179	**72.44** 2.852	**27.48** 1.082	**0.898**	1.98	**20500** 4600	**36300** 8160
G1111KPPB4	1111KPPB4		1 11/16												**0.848**	1.87		
G1112KPPB4	1112KPPB4		1 3/4												**0.826**	1.82		
GE45KPPB4	E45KPPB4		**45**												**0.826**	1.82		
G1113KPPB3	1113KPPB3	210	1 13/16	**90** 3.5433	**49.21** 1 15/16	**23** 0.906	**4.8** 3/16	**69.9** 2 3/4	**18.3** 23/32	**24.60** 31/32	**62.7** 2 15/32	**4.70** 0.185	**77.70** 3.059	**27.51** 1.083	**1.116**	2.46	**22700** 5100	**39200** 8800
G1114KPPB3	1114KPPB3		1 7/8												**1.034**	2.28		
G1115KPPB3	1115KPPB3		1 15/16												**1.016**	2.24		
GE50KPPB3	E50KPPB3		**50**												**1.016**	2.24		
G1200KPPB4	1200KPPB4	211	2	**100** 3.9370	**55.56** 2 3/16	**24** 0.945	**4.8** 3/16	**76.2** 3	**20.6** 13/16	**27.80** 1 3/32	**71.4** 2 13/16	**5.41** 0.213	**87.17** 3.432	**29.01** 1.142	**1.583**	3.49	**28500** 6400	**48100** 10800
G1201KPPB4	1201KPPB4		2 1/16												**1.470**	3.24		
G1202KPPB4	1202KPPB4		2 1/8												**1.406**	3.10		
G1203KPPB4	1203KPPB4		2 3/16												**1.365**	3.01		
GE55KPPB4	E55KPPB4		**55**												**1.365**	3.01		

[1]Applies to relubricatable type only.
NOTE: Suggested max speed – 500 RPM.
NOTE: Bore tolerance: 13/16 in. – 2 3/16 in., nominal to +0.013 mm, +0.0005 in.

GC-KRRB INDUSTRIAL-SERIES CONCENTRIC COLLAR, RELUBRICATABLE TYPES

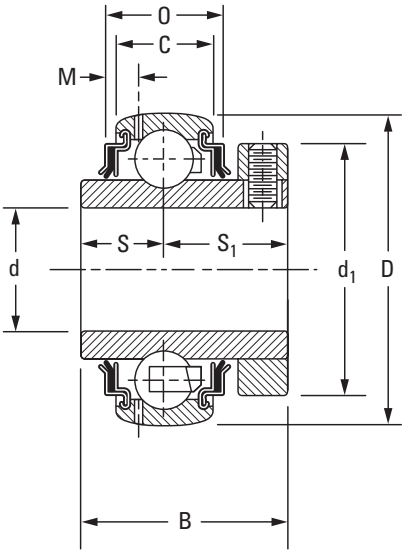

- These bearing are relubricatable with spherical outside diameters and shroud seals.
- The metal shroud maintains tight seal contact against the inner ring and shields the rubber seals from damage because of dirt or fiber wrap.
- The concentric collar is locked to the shaft by two set screws located 120 degrees apart, mated with threaded holes in the collar and drilled holes in the bearing inner ring.
- The extra-wide design provides additional shaft support and extra-large grease capacity.

Suggested shaft tolerances:

1/2 in. – 1 15/16 in., nominal to -0.013 mm, -0.0005 in.;
2 in. – 2 15/16 in., nominal to -0.025 mm, -0.0010 in.

To order, specify bearing number.

Example: GC1103KRRB + COL.

Bearing No. Spherical O.D.	Collar No.	Basic Outer-Ring Size	Shaft Dia. d	O.D. D	Ring Widths Inner B	Ring Widths Outer C	S	S_1	d_1	M	O	Set Screw Size	Brg. and Collar Wt.		Static Load Rating C_o	Extended Dynamic Load Rating C_E
			in. **mm**	**mm** in.	**mm** in.	**mm** in.	**mm** in.	**mm** in.	**mm** in.	**mm** in.	**mm** in.	**mm** in.	**kg**	lbs.	**N** lbs.	**N** lbs.
GC1008KRRB			1/2										**0.154**	0.34		
GC1010KRRB	C203	203	5/8	**40**	**26.59**	**12**	**11.1**	**15.5**	**34.1**	**2.72**	**14.71**	**M5x0.8**	**0.145**	0.32	**4700**	**10600**
GC1011KRRB			11/16	1.5748	1 3/64	0.4720	7/16	39/64	11/32	0.107	0.579	10-32	**0.122**	0.27	1060	2360
GCE17KRRB			**17**										**0.122**	0.27		
GC1012KRRB	C204	204	3/4	**47**	**30.96**	**14**	**12.3**	**18.7**	**38.1**	**3.43**	**20.68**	**M5x0.8**	**0.204**	0.45	**6200**	**14300**
GCE20KRRB			**20**	1.8504	1 7/32	0.5510	31/64	47/64	1 1/2	0.135	0.814	10-32	**0.204**	0.45	1400	3200
GC1014KRRB			7/8										**0.272**	0.60		
GC1015KRRB	C205	205	15/16	**52**	**34.13**	**15**	**13.9**	**20.2**	**44.4**	**3.61**	**19.74**	**M6x1**	**0.254**	0.56	**7700**	**15800**
GC1100KRRB			1	2.0472	1 11/32	0.5905	35/64	51/64	1 3/4	0.142	0.777	1/4-28	**0.231**	0.51	1730	3550
GCE25KRRB			**25**										**0.231**	0.51		
GC1102KRRB			1 1/8										**0.404**	0.89		
GC1103KRRB	C206	206	1 3/16	**62**	**37.31**	**18**	**14.7**	**22.6**	**52.4**	**4.19**	**24.51**	**M6x1**	**0.376**	0.83	**11100**	**21800**
GC1103KRRB3			1 1/4	2.4409	1 15/32	0.7090	37/64	57/64	2 1/16	0.156	0.965	1/4-28	**0.349**	0.77	2500	4900
GCE30KRRB			**30**										**0.376**	0.83		
GC1104KRRB			1 1/4										**0.653**	1.44		
GC1106KRRB	C207	207	1 3/8	**72**	**41.28**	**19**	**15.9**	**25.4**	**59.5**	**3.68**	**25.86**	**M6x1**	**0.572**	1.26	**15100**	**28500**
GC1107KRRB			1 7/16	2.8346	1 5/8	0.7481	5/8	1	2 11/32	0.145	1.018	1/4-28	**0.544**	1.20	3400	6400
GCE35KRRB			**35**										**0.572**	1.26		
GC1108KRRB	C208	208	1 1/2	**80**	**44.05**	**21**	**16.7**	**27.4**	**68.3**	**5.66**	**28.42**	**M8x1.25**	**0.789**	1.74	**19800**	**20500**
GCE40KRRB			**40**	3.1496	1 47/64	0.8270	21/32	1 5/64	2 11/16	0.223	1.119	5/16-24	**0.739**	1.63	4460	4600
GC1110KRRB	C209-2		1 5/8										**0.898**	1.98		
GC1111KRRB		209	1 11/16	**85**	**46.83**	**22**	**17.5**	**29.4**	**73.0**	**4.55**	**32.21**	**M8x1.25**	**0.848**	1.87	**36200**	**36300**
GC1112KRRB	C209		1 3/4	3.3465	1 27/32	0.8660	1 11/16	1 5/32	2 7/8	0.179	1.268	5/16-24	**0.826**	1.82	8130	8160
GCE45KRRB			**45**										**0.826**	1.82		
GC1115KRRB	C210	210	1 15/16	**90**	**48.42**	**23**	**18.3**	**30.2**	**79.4**	**4.70**	**32.23**	**M8x1.25**	**0.990**	2.18	**22700**	**39200**
GCE50KRRB			**50**	3.5433	1 29/32	0.9060	23/32	1 3/16	3 1/8	0.185	1.269	5/16-24	**0.990**	2.18	5100	8800
GC1200KRRB			2										**1.520**	3.35		
GC1203KRRB	C211	211	2 3/16	**100**	**53.97**	**24**	**20.6**	**33.3**	**88.9**	**5.41**	**33.73**	**M10x1.5**	**1.306**	2.88	**28500**	**48000**
GCE55KRRB			**55**	3.9370	2 1/8	0.9450	13/16	1 5/16	3 1/2	0.213	1.328	3/8-24	**1.306**	2.88	6400	10800
GC1207KRRB	C212	212	2 7/16	**110**	**60.32**	**27**	**23.0**	**37.3**	**95.3**	**5.13**	**35.03**	**M10x1.5**	**1.565**	3.45	**35600**	**58800**
GCE60KRRB			**60**	4.3307	2 3/8	1.0630	29/32	1 15/32	3 3/4	0.202	1.379	3/8-24			8000	13200
GC1215KRRB	C215	215	2 15/16	**130**	**70.64**	**29**	**27.0**	**43.7**	**114.3**	**5.59**	**38.25**	**M10x1.5**	**2.640**	5.82	**43600**	**69500**
GCE75KRRB			**75**	5.1181	2 25/32	1.1420	1 1/16	1 23/32	4 1/2	0.219	1.506	3/8-20			9800	15600

NOTE: Bore tolerances: 1 3/16 in. – 2 3/16 in., nominal to +0.013 mm, +0.0005 in.
2 1/4 in. – 3 3/16 in., nominal to +0.015 mm, +0.0006 in.

SM INDUSTRIAL SERIES A AND B TYPES/MUA-B INSERTS[1]

- Standard SM series A and B have the same ring tolerances and corner radii as equivalent 200-series single-row radial ball bearings.
- Type A has cylindrical outside diameters; type B has spherical outside diameters. The letter B appears on the outer ring only.
- The bearings are not prelubricated.

Suggested shaft tolerances:

½ in. – 1 15/16 in., nominal to -0.013 mm, -0.0005 in.;
2 in. – 3 15/16 in., nominal to -0.025 mm, -0.0010 in.

To order, specify bearing number followed by "+ COL".
Example: SM1207KB + COL.

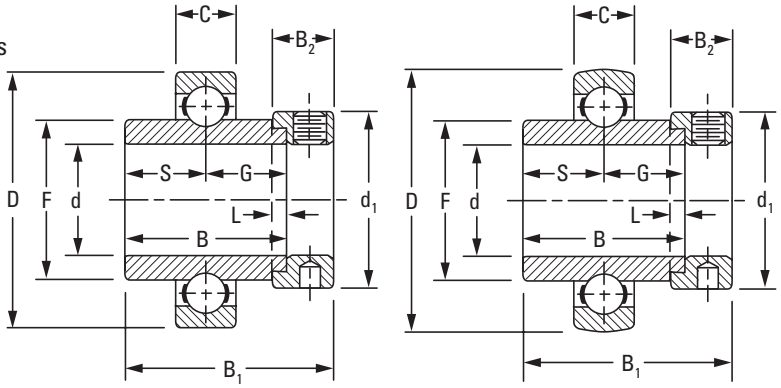

Type A **Type B**

Bearing No. A Type[2]	Bearing No. B Type	Collar No.	Basic Outer-Ring Size	Shaft Dia. d	O.D. D	Ring Widths Inner B	Ring Widths Outer C	S(G)	F	L	d_1	B_1	B_2	Brg. and Collar Wt.		Static Load Rating C_o	Extended Dynamic Load Rating C_E
				in.	mm in.	mm in.	mm in.	mm in.	mm in.	mm in.	mm in.	mm in.	mm in.	kg	lbs.	N lbs.	N lbs.
SM1008K	SM1008KB	S1008K	203	½	40 1.5748	27.78 1 3/32	12 0.4724	13.90 35/64	22.86 0.900	4.0 5/32	28.60 1 1/8	13.50 17/32	37.30 1 15/32	0.145	0.32	4700 1600	10600 2360
SM1009K	SM1009KB	S1009K		9/16										0.131	0.29		
SM1010K	SM1010KB	S1010K		5/8										0.136	0.30		
SM1011K	SM1011KB	S1011K		11/16										0.113	0.25		
SM1012K	SM1012KB	S1012K	204	¾	47 1.8504	34.13 1 11/32	14 0.5512	17.10 43/64	27.56 1.085	4.0 5/32	33.30 1 5/16	13.50 17/32	48.66 1 23/32	0.195	0.43	6200 1400	14300 3200
SM1013K	SM1013KB	S1013K	205	13/16	52 2.0472	34.93 1 3/8	15 0.5906	17.50 11/16	33.83 1.332	4.0 5/32	38.10 1 1/2	13.50 17/32	44.45 1 3/4	0.276	0.61	6950 1730	15600 3450
SM1014K	SM1014KB	S1014K		7/8										0.254	0.56		
SM1015K	SM1015KB	S1015K		15/16										0.236	0.52		
SM1100K	SM1100KB	S1100K		1										0.217	0.48		
SM1101K	SM1101KB	S1101K	206	1 1/16	62 2.4409	36.51 1 7/16	16 0.6299[3]	18.30 23/32	40.31 1.587	4.0 5/32	44.40 1 3/4	15.90 5/8	48.40 1 29/32	0.399	0.88	11100 2500	21600 4800
SM1102K	SM1102KB	S1102K		1 1/8										0.367	0.81		
SM1103K	SM1103KB	S1103K		1 3/16										0.331	0.73		
SM1104K	SM1104KB	S1104K	207	1 1/4	72 2.8346	37.70 1 31/64	17 0.6693[4]	18.85 0.742	46.13 1.816	4.0 5/32	54.00 2 1/8	17.46 11/16	51.20 2 1/64	0.621	1.37	15100 3400	28500 6400
SM1105K	SM1105KB	S1105K		1 5/16										0.589	1.30		
SM1106K	SM1106KB	S1106K		1 3/8										0.562	1.24		
SM1107K	SM1107KB	S1107K		1 7/16										0.539	1.19		
SM1108KT	SM1108KB	S1108KT	208	1 1/2	80 3.1496	42.86 1 11/16	18 0.7087[5]	21.40 27/32	52.27 2.058	4.8 3/16	60.30 2 3/8	18.30 23/32	56.40 2 7/32	0.761	1.68	19600 4400	36000 8150
SM1109KT	–	S1109KT		1 9/16										0.716	1.58		
SM1110K	SM1110KB	S1110K	209	1 5/8	85 3.3465	42.86 1 11/16	19 0.7480	21.40 27/32	57.92 2.280	4.8 3/16	63.50 2 1/2	18.30 23/32	56.40 2 7/32	0.875	1.93	20000 4500	36000 8150
SM1111K	SM1111KB	S1111K		1 11/16										0.857	1.89		
SM1112K	SM1112KB	S1112K		1 3/4										0.803	1.77		

[1]See page A-159.
[2]Order as MUA assembly suggested.
[3]Spherical O.D. outer-ring width is 18 mm (0.7087 in.).
[4]Spherical O.D. outer-ring width is 19 mm (0.7480 in.).
[5]Spherical O.D. outer-ring width is 21 mm (0.8268 in.).
[6]For applications where thrust load exceeds 60 percent of radial load, consult your Timken engineer.
NOTE: Bore tolerance: ½ in. – 2 3/16 in., nominal to +0.013 mm, +0.0005 in.
2 ¼ in. – 3 3/16 in., nominal to +0.015 mm, +0.0006 in.
3 ¼ in. – 3 15/16 in., nominal to +0.018 mm, +0.0007 in.

Continued on next page.

SM INDUSTRIAL SERIES A AND B TYPES/MUA-B INSERTS[1] *– continued*

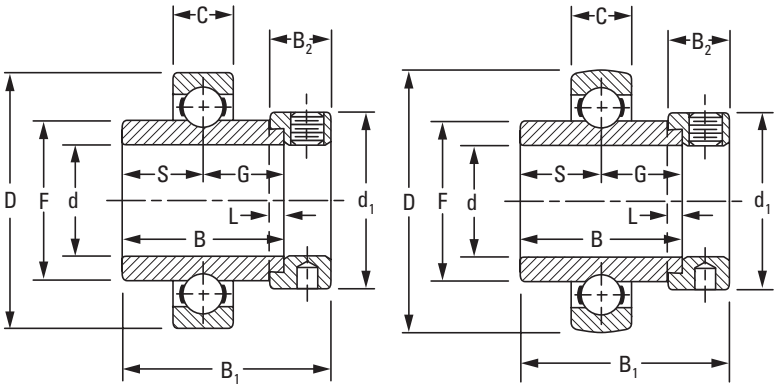

Type A **Type B**

Continued from previous page.

Bearing No. A Type[2]	Bearing No. B Type	Collar No.	Basic Outer-Ring Size	Shaft Dia. d	O.D. D	Ring Widths Inner B	Ring Widths Outer C	S(G)	F	L	d_1	B_1	B_2	Brg. and Collar Wt.		Static Load Rating C_o	Extended Dynamic Load Rating C_E
				in.	mm in.	mm in.	mm in.	mm in.	mm in.	mm in.	mm in.	mm in.	mm in.	kg	lbs.	N lbs.	N lbs.
SM1113K	SM1113KB	S1113K	210	1 13/16	90 3.5433	49.21 1 15/16	20 0.7874	24.60 31/32	62.84 2.474	4.8 3/16	69.90 2 3/4	18.30 23/32	62.70 2 15/32	1.075	2.37	22700 5100	39000 8800
SM1114K	SM1114KB	S1114K		1 7/8										1.012	2.23		
SM1115K	SM1115KB	S1115K		1 15/16										0.962	2.12		
SM1200K	SM1200KB	S1200K	211	2	100 3.9370	55.56 2 9/16	21 0.8268	27.80 1 3/32	69.77 2.747	4.8 3/16	76.20 3	20.60 13/16	71.40 2 13/16	1.51	3.33	28500 6400	48000 10800
SM1201K	SM1201KB	S1201K		2 1/16										1.397	3.08		
SM1202K	SM1202KB	S1202K		2 1/8										1.438	3.17		
SM1203K	SM1203KB	S1203K		2 3/16										1.256	2.77		
SM1204K	SM1204KB	S1204K	212	2 1/4	110 4.3307	61.91 2 7/16	22 0.8661	30.96 1 7/32	76.48 3.011	6.4 1/4	84.14 3 5/16	22.33 7/8	77.80 3 1/16	1.860	4.10	35600 8000	58500 13200
SM1205K	SM1205KB	S1205K		2 5/16										1.787	3.94		
SM1206K	SM1206KB	S1206K		2 3/8										1.692	3.73		
SM1207K	SM1207KB	S1207K		2 7/16										1.374	3.03		
SM1208K	SM1208KB	S1208K	213	2 1/2	120 4.7244	68.26 2 11/16	23 0.9055	34.13 1 11/32	84.58 3.330	6.4 1/4	96.84 3 13/16	23.81 15/16	85.73 3 3/8	2.472	5.45	39200 8800	63000 14300
SM1211KT	SM1211KTB	S1211KT	214	2 11/16	125 4.9213	68.26 2 11/16	24 0.9449	34.13 1 11/32	86.92 3.422	6.4 1/4	96.84 3 13/16	23.81 15/16	85.73 3 3/8	2.418	5.33	43000 9650	69500 15600
SM1213K	SM1213KB	S1213K	215	2 13/16	130 5.1181	74.61 2 15/16	25 0.9843	37.30 1 15/32	91.92 3.619	6.4 1/4	101.60 4	23.81 15/16	92.08 3 5/8	2.858	6.30	43600 9800	68000 15300
SM1215K	SM1215KB	S1215K		2 15/16										2.803	6.18		
SM1303K	SM1303KB	S1303K	216	3 3/16	140 5.1118	80.96 3 3/16	26 1.0236	40.48 1 19/32	98.40 3.874	6.4 1/4	111.13 4 3/8	25.40 1	100.01 3 15/16	3.452	7.61	53400 12000	80000 18000
SM1307K	SM1307KB	S1307K	217	3 7/16	150 5.9055	87.31 3 7/16	28 1.1024	43.66 1 23/32	104.83 4.127	6.4 1/4	112.71 4 7/16	25.40 1	106.36 4 3/16	3.901	8.60	61000 13700	93000 20800
SM1311W-BR	SM1311WB-BR[6]	S1311K	219	3 11/16	170 6.6929	93.66 3 11/16	32 1.2598	46.83 1 27/32	118.34 4.659	6.4 1/4	127.00 5	26.99 11/16	114.30 4 1/2	6.078	13.40	113600 25500	150000 34000
SM1315W-BR	SM1315WB-BR[6]	S1315	220	3 15/16	180 7.0866	100.01 3 15/16	34 1.3386	50.00 1 31/32	123.85 4.876	6.4 1/4	139.70 5 1/2	31.75 1 1/4	125.41 4 15/16	7.335	16.17	126900 28500	170000 38000

[1]See page A-159.
[2]Order as MUA assembly suggested.
[3]Spherical O.D. outer-ring width is 18 mm (0.7087 in.).
[4]Spherical O.D. outer-ring width is 19 mm (0.7480 in.).
[5]Spherical O.D. outer-ring width is 21 mm (0.8268 in.).
[6]For applications where thrust load exceeds 60 percent of radial load, consult your Timken engineer.
NOTE: Bore tolerance: 1/2 in. – 2 3/16 in., nominal to +0.013 mm, +0.0005 in.
2 1/4 in. – 3 3/16 in., nominal to +0.015 mm, +0.0006 in.
3 1/4 in. – 3 15/16 in., nominal to +0.018 mm, +0.0007 in.

SM-S INDUSTRIAL SERIES

- Standard SM-S series permits the inner assembly to swivel in the outer aligning ring.
- The unrestricted self-alignment is achieved by allowing the inner ring to become square and true with the shaft and assembly.
- The external S-ring is uniquely ground and closely matched to its respective outer-bearing ring. The S-ring of one bearing will not fit the outer ring of another bearing.
- The bearings are not prelubricated.

Suggested shaft tolerances:

1 in. – 1 15/16 in., nominal to -0.013 mm, -0.0005 in.;
2 in. – 3 15/16 in., nominal to -0.025 mm, -0.0010 in.

To order, specify bearing number followed by "+ COL".

Example: SM1100KS + COL.

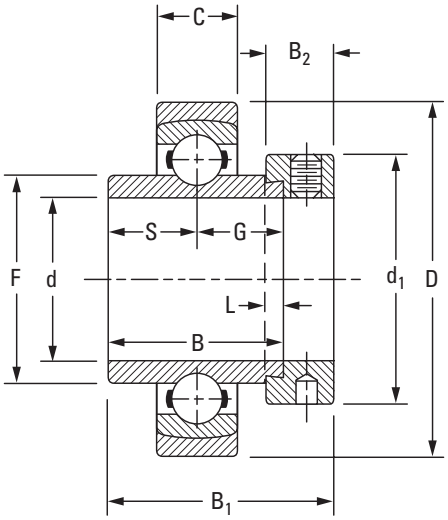

Bearing No.	Collar No.	Basic Outer-Ring Size	Shaft Dia. d	O.D. D	Ring Widths Inner B	Ring Widths Outer C	S(G)	F	L	d_1	B_2	B_1	Brg. and Collar Wt.		Static Load Rating C_o	Extended Dynamic Load Rating C_E
			in.	mm in.	mm in.	mm in.	mm in.	mm in.	mm in.	mm in.	mm in.	mm in.	kg	lbs.	N lbs.	N lbs.
SM1100KS	S1100K	205	1	57 2.2441	34.93 1 3/8	15 0.5910	17.46 11/16	33.83 1.332	4.0 5/32	38.10 1 1/2	13.50 17/32	44.10 1 47/64	0.263	0.58	7700 1730	15600 3450
SM1103KS	S1103K	206	1 3/16	68 2.6772	36.51 1 7/16	16 0.6300	18.30 23/32	39.12 1.540	4.0 5/32	44.40 1 3/4	15.90 5/8	48.40 1 29/32	0.418	0.92	11100 2500	21600 4800
SM1104KS SM1107KS	S1104K S1107K	207	1 1/4 1 7/16	79 3.1102	37.70 1 31/64	17 0.6690	18.85 0.742	46.13 1.816	4.0 5/32	54.40 2 1/8	17.46 11/16	51.20 2 1/64	0.726 0.658	1.60 1.45	11500 3400	28500 6400
SM1108KS	S1108KT	208	1 1/2	88 3.4646	42.86 1 11/16	18 0.7090	21.40 27/32	52.27 2.058	4.8 3/16	60.30 2 3/8	18.30 23/32	56.40 2 7/32	0.903	1.99	19600 4400	36000 8150
SM1115KS	S1115K	210	1 15/16	100 3.9370	49.21 1 15/16	20 0.7874	24.60 31/32	62.84 2.474	4.8 3/16	69.90 2 3/4	18.30 23/32	62.70 2 15/32	1.185	2.61	22700 5100	39000 8800
SM1203KS	S1203K	211	2 3/16	110 4.3307	55.56 2 3/16	21 0.8268	27.80 1 3/32	69.77 2.747	4.8 3/16	76.20 3	20.60 13/16	71.40 2 13/16	1.748	3.85	28500 6400	48000 10800
SM1207KS	S1207K	212	2 7/16	120 4.7244	61.91 2 7/16	22 0.8661	30.96 1 7/32	76.48 3.011	6.4 1/4	84.14 3 5/16	22.20 7/8	77.80 3 1/16	1.907	4.20	35600 8000	58500 13200
SM1211KS	S1211KT	214	2 11/16	140 5.5118	68.26 2 11/16	24 0.9449	34.13 1 11/32	86.92 3.422	6.4 1/4	96.84 3 13/16	23.81 15/16	79.40 3 3/8	2.974	6.55	43000 9650	69500 15600
SM1215KS	S1215K	215	2 15/16	145 5.7087	74.61 2 15/16	25 0.9843	37.30 1 15/32	91.92 3.619	6.4 1/4	101.60 4	23.81 15/16	92.08 3 5/8	3.541	7.80	43600 9800	68000 15300
SM1303KS	S1303K	216	3 3/16	155 6.1024	80.96 3 3/16	26 1.0236	40.48 1 19/32	98.40 3.874	6.4 1/4	111.13 4 3/8	25.40 1	100.01 3 15/16	4.150	9.14	53400 12000	80000 18000
SM1307KS	S1307K	217	3 7/16	165 6.4961	87.31 3 7/16	28 1.1024	43.66 1 23/32	104.83 4.127	6.4 1/4	112.71 4 7/16	25.40 1	106.36 4 3/16	4.690	10.33	61000 13700	93000 20800
SM1315WS[1]	S1315K	220	3 15/16	200 7.8740	100.01 3 15/16	34 1.3386	50.00 1 31/32	123.85 4.876	6.4 1/4	139.70 5 1/2	31.75 1 1/4	125.41 4 15/16	8.939	19.69	126900 28500	170000 38000

[1]For applications where thrust load exceeds 60 percent of radial load, consult your Timken engineer.
NOTE: Bore tolerance: 1 in. – 2 3/16 in., nominal to +0.013 mm, +0.0005 in.
2 1/4 in. – 3 3/16 in., nominal to +0.015 mm, +0.0006 in.
3 1/4 in. – 3 15/16 in., nominal to +0.018 mm, +0.0007 in.

GY-KRRB SET SCREW INDUSTRIAL SERIES

- Incorporates Shaft Guarding Technology, which reduces replacement time, provides shaft protection and prolongs the life of the shaft.
- The Y-series set screw bearing has increased shaft support for HVAC and other industrial applications.
- The Y series features superfinished raceways, grade-10 balls and anti-back-out nylon-patch set screws; they are factory-prelubricated and relubricatable.
- The set screw mounting feature is ideal for reversing load applications.

Suggested shaft tolerances:

½ in. – 1 15/16 in., nominal to -0.013 mm, -0.0005 in.;
2 in. – 2 15/16 in., nominal to -0.025 mm, -0.0010 in.

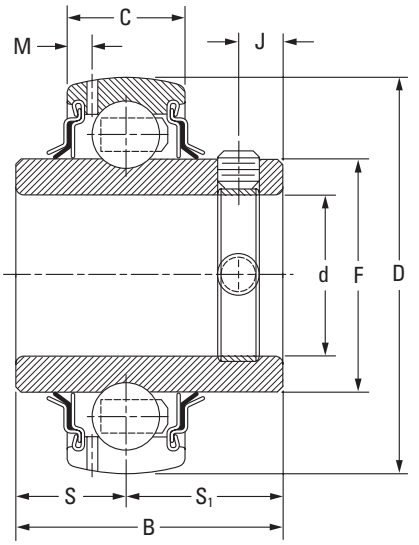

Bearing No.	Basic Outer-Ring Size	Shaft Dia. d	O.D. D	Ring Widths Inner B	Ring Widths Outer C	S	S_1	F	M	J	Set Screw Size	Static Load Rating C_o	Extended Dynamic Load Rating C_E
		in. **mm**	**mm** in.	**mm** in.	**mm** in.	**mm** in.	**mm** in.	**mm** in.	**mm** in.	**mm** in.	**mm** in.	**N** lbs.	**N** lbs.
GY1008KRRB	203	½	**40** 1.5748	**27.38** 1.0780	**12** 0.0472	**11.50** 0.453	**15.88** 0.6250	**22.86** 0.900	**2.72** 0.107	**4.55** 0.179	**M5X.8** 10 – 32	**4400** 1000	**10600** 2360
GY1009KRRB		9/16											
GY1010KRRB		5/8											
GY1011KRRB		11/16											
GYE15KRRB		**15**											
GYE17KRRB		**17**											
GY1012KRRB SGT	204	¾	**47** 1.8504	**31.80** 1.2480	**14** 0.5500	**12.70** 0.500	**19.10** 0.7480	**27.56** 1.085	**3.43** 0.135	**5.87** 0.231	**M5X.8** 10 – 32	**6200** 1400	**14300** 3200
GYE20KRRB SGT		**20**											
GY1013KRRB	205	13/16	**52** 2.0472	**34.85** 1.3717	**15** 0.5910	**14.27** 0.562	**20.56** 0.8097	**33.83** 1.332	**3.86** 0.152	**6.80** 0.267	**M6X1** ¼ – 28	**7700** 1730	**15800** 3550
GY1014KRRB SGT		7/8											
GY1015KRRB SGT		15/16											
GY1100KRRB SGT		1											
GYE25KRRB SGT		**25**											
GY1101KRRB	206	1 1/16	**62** 2.4409	**39.10** 1.5400	**18** 0.7090	**15.88** 0.625	**23.24** 0.9150	**40.31** 1.587	**3.96** 0.156	**8.63** 0.340	**M6X1** ¼ – 28	**11000** 2500	**21600** 4800
GY1102KRRB SGT		1 1/8											
GY1103KRRB SGT		1 3/16											
GY1103KRRB3		1 ¼											
GYE30KRRB SGT		**30**											
GY1104KRRB SGT	207	1 ¼	**72** 2.8346	**45.41** 1.7880	**19** 0.7480	**17.48** 0.688	**27.94** 1.1000	**46.18** 1.816	**3.68** 0.145	**10.36** 0.408	**M8X1.25** 5/16 – 24	**15100** 3400	**28500** 6400
GY1105KRRB		1 5/16											
GY1106KRRB SGT		1 3/8											
GY1107KRRB SGT		1 7/16											
GYE35KRRB SGT		**35**											
GY1108KRRB SGT	208	1 ½	**80** 3.1496	**49.22** 1.9380	**21** 0.8270	**19.05** 0.750	**30.17** 1.1880	**52.27** 2.058	**4.06** 0.160	**8.00** 0.315	**M8X1.25** 5/16 – 24	**19600** 4400	**36000** 8150
GY1109KRRB		1 9/16											
GYE40KRRB SGT		**40**											

NOTE: Bore tolerances: ½ in. – 2 3/16 in., nominal to +0.013 mm, +0.0005 in.
2 ¼ in. – 3 15/16 in., nominal to +0.015 mm, +0.0006 in.

Continued on next page.

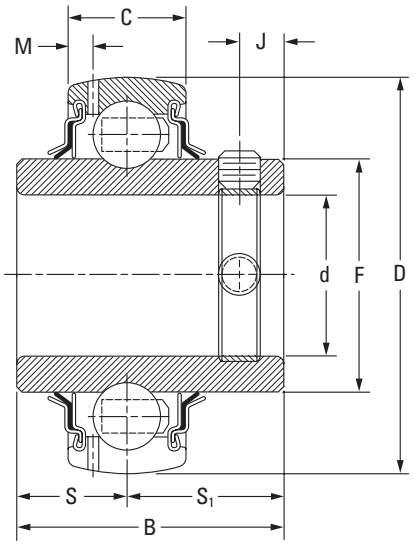

Continued from previous page.

Bearing No.	Basic Outer-Ring Size	Shaft Dia. d	O.D. D	Ring Widths Inner B	Ring Widths Outer C	S	S_1	F	M	J	Set Screw Size	Static Load Rating C_o	Extended Dynamic Load Rating C_E
		in. **mm**	**mm** in.	**mm** in.	**mm** in.	**mm** in.	**mm** in.	**mm** in.	**mm** in.	**mm** in.	**mm** in.	**N** lbs.	**N** lbs.
GY1110KRRB SGT	209	1 5/8	**85** 3.3465	**50.37** 1.9830	**22** 0.8661	**19.05** 0.750	**31.32** 1.2330	**57.92** 2.280	**4.55** 0.179	**9.14** 0.360	**M8X1.25** 5/16 – 24	**20000** 4500	**36000** 8150
GY1111KRRB SGT		1 11/16											
GY1112KRRB SGT		1 3/4											
GYE45KRRB SGT		**45**											
GY1113KRRB	210	1 13/16	**90** 3.5433	**51.59** 2.0310	**22** 0.8661	**19.05** 0.750	**32.54** 1.2810	**62.84** 2.474	**4.70** 0.185	**10.00** 0.394	**M10X1.5** 3/8 – 24	**22700** 5100	**39000** 8800
GY1114KRRB		1 7/8											
GY1115KRRB SGT		1 15/16											
GY1115KRRB3		2											
GYE50KRRB SGT		**50**											
GY1200KRRB SGT	211	2	**100** 3.9370	**55.55** 2.1870	**24** 0.9450	**22.22** 0.875	**33.32** 1.3120	**69.77** 2.747	**5.00** 0.197	**10.00** 0.394	**M10X1.5** 3/8 – 24	**28500** 6400	**48000** 10800
GY1201KRRB		2 1/16											
GY1202KRRB		2 1/8											
GY1203KRRB SGT		2 3/16											
GYE55KRRB SGT		**55**											
GY1204KRRB SGT	212	2 1/4	**110** 4.3307	**65.07** 2.5620	**27** 1.0630	**25.40** 1.000	**39.67** 1.5620	**76.48** 3.011	**5.13** 0.202	**10.00** 0.394	**M10X1.5** 3/8 – 24	**35600** 8000	**58500** 13200
GY1205KRRB		2 5/16											
GY1206KRRB		2 3/8											
GY1207KRRB SGT		2 7/16											
GYE60KRRB SGT		**60**											
GY1210KRRB	214	2 5/8	**125** 4.9213	**69.85** 2.7500	**28** 1.1020	**26.97** 1.062	**42.84** 1.6870	**86.92** 3.422	**5.08** 0.200	**12.00** 0.472	**M12X1.75** 7/16 – 20	**37500** 8500	**69500** 15600
GY1211KRRB		2 11/16											
GYE70KRRB		**70**											
GY1212KRRB	215	2 3/4	**130** 5.1181	**77.80** 3.0630	**29** 1.1420	**33.32** 1.312	**44.45** 1.7500	**91.92** 3.619	**5.56** 0.219	**12** 0.472	**M12X1.75** 7/16 – 20	**43600** 9800	**69500** 15600
GY1214KRRB		2 7/8											
GY1215KRRB		2 15/16											
GYE75KRRB		**75**											

NOTE: Bore tolerances: 1/2 in. – 2 3/16 in., nominal to +0.013 mm, +0.0005 in.
2 1/4 in. – 3 15/16 in., nominal to +0.015 mm, +0.0006 in.

ER INDUSTRIAL SERIES, RELUBRICATABLE TYPES

- Incorporates (optional) Shaft Guarding Technology, which reduces replacement time, provides shaft protection and prolongs shaft life.
- This bearing is designed for use in applications where low-starting torque and low-running torque are necessary.
- The ER-DD series is for applications where extremely low torque is required.
- Test results indicate an average of 95 percent reduction in start-up torque when using ER-DD instead of the standard ER bearing. Running torque is reduced up to 85–90 percent.

Suggested shaft tolerances:

1/2 in. – 1 15/16 in., nominal to -0.013 mm, -0.0005 in.;

2 in. – 3 7/16 in., nominal to -0.025 mm, -0.0010 in.

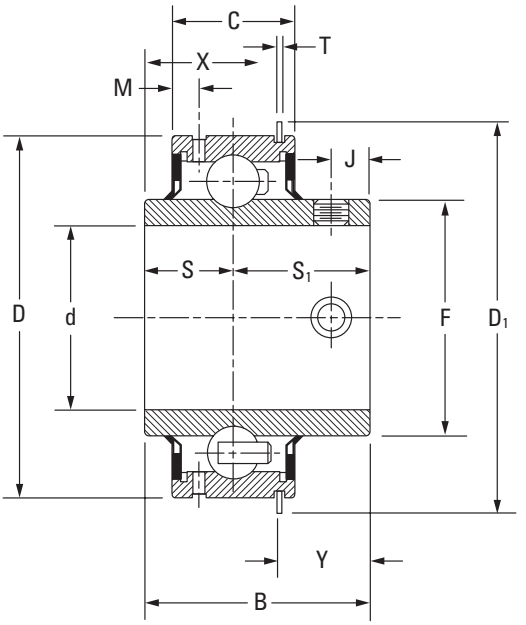

Bearing No.	Basic Outer-Ring Size	Shaft Dia. d	O.D. D	Ring Widths Inner B	Ring Widths Outer C	S	S1	F	J	D1	Y	T	M	X	Set Screw Size	Brg. Wt.		Static Load Rating Co	Extended Dynamic Load Rating CE
		in.	mm in.	mm in.	mm in.	mm in.	mm in.	mm in.	mm in.	mm in.	mm in.	mm in.	mm in.	mm in.	mm in.	kg	lbs.	N lbs.	N lbs.
ER08(1)	204	1/2	47 1.850	30.963 1 7/32	15.817 5/8	12.700 1/2	18.263 64/89	27.546 1 5/64	5.131 13/64	52.400 2 6/95	16.612 1/16	1.067 3/64	3.861 5/32	14.351 9/16	M5X.8 10 - 32	0.190	0.42	6571.2 1480	14163.6 3190
ER10(1)		5/8														0.167	0.37		
ER12(1)(2)		3/4														0.141	0.31		
ER14(1)(2)	205	7/8	52 2.047	34.841 1 3/8	18.992 3/4	14.275 50/89	20.566 13/16	33.820 1 21/64	6.774 17/64	57.531 2 17/64	17.341 11/16	1.067 3/64	3.404 9/64	17.501 11/16	M6X1 1/4 -28	0.218	0.480	7814.4 1760	15495.6 3490
ER15(2)		15/16														0.195	0.43		
ER16(1)(2)		1														0.181	0.40		
ER18(2)	206	1 1/8	62 2.441	39.116 1 35/64	22.167 7/8	15.875 5/8	23.241 59/64	40.297 1 37/64	8.636 11/32	67.285 2 41/64	18.948 3/4	1.651 1/16	5.563 7/32	20.168 51/64	M6X1 1/4 -28	0.340	0.75	11233.2 2530	21534 4850
ER19(2)		1 3/16														0.313	0.69		
ER20(1)(2)	207	1 1/4	72 2.834	45.415 1 25/32	23.754 15/16	17.475 11/16	27.940 1 7/64	46.825 1 27/32	10.363 13/32	78.105 3 5/64	22.301 7/8	1.651 1/16	5.563 7/32	23.114 29/32	M8X1.25 5/16 -24	0.567	1.25	15273.6 3440	28416 6400
ER22(1)(2)		1 3/8														0.499	1.10		
ER23(1)(2)		1 7/16														0.476	1.05		
ER24(1)(2)	208	1 1/2	80 3.149	49.225 1 15/16	27.722 1 3/32	19.050 3/4	30.175 1 3/16	52.261 2 3/64	8.001 5/16	86.106 3 25/64	21.158 53/64	1.651 1/16	6.350 1/4	28.067 1 7/64	M8X1.25 5/16 - 24	0.671	1.48	19802.4 4460	36097.2 8130
ER27(2)	209	1 11/16	85 3.346	50.368 1 63/64	27.724 1 3/32	19.050 3/4	31.318 1 15/64	57.899 2 15/64	9.144 23/64	91.110 3 37/64	22.250 7/8	1.651 1/16	6.325 1/4	28.118 1 7/64	M8X1.25 5/16 - 24	0.735	1.62	20424 4600	36230.4 8160
ER28(1)(2)		1 3/4														0.690	1.52		
ER30	210	1 7/8	90 3.543	51.587 2 1/32	28.517 1 1/8	19.050 3/4	32.537 1 9/32	62.827 2 15/32	10.008 25/64	96.088 3 25/32	24.282 31/32	2.413 3/32	7.061 9/32	27.305 1 5/64	M10X1.5 3/8 - 24	0.853	1.88	23132.4 5210	38805.6 8740
ER31(2)		1 15/16														0.834	1.84		

(1)DD low-drag/low-torque version is available.
(2)Available with Shaft Guarding Technology modification.
NOTE: Bore tolerances: 1.1874 in. – 2.1874 in. nominal to +0.013 mm, +0.0005 in.
2.2500 in. – 3.1874 in. nominal to +0.015 mm, +0.0006 in.

Continued on next page.

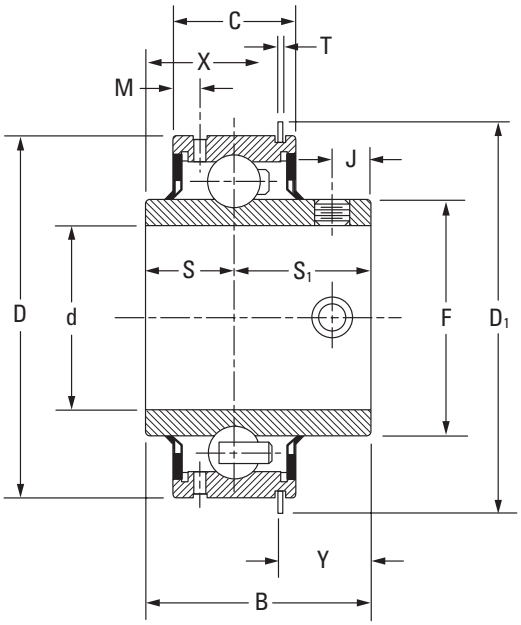

Continued from previous page.

Bearing No.	Basic Outer-Ring Size	Shaft Dia. d	O.D. D	Ring Widths Inner B	Ring Widths Outer C	S	S_1	F	J	D_1	Y	T	M	X	Set Screw Size	Brg. Wt.		Static Load Rating C_o	Extended Dynamic Load Rating C_E
		in.	**mm** in.	**mm** in.	**mm** in.	**mm** in.	**mm** in.	**mm** in.	**mm** in.	**mm** in.	**mm** in.	**mm** in.	**mm** in.	**mm** in.	**mm** in.	**kg**	lbs.	**N** lbs.	**N** lbs.
ER32[1][2] ER35[2]	211	2 3/16	**100** 3.9370	**55.56** 2 3/16	**30.16** 1 3/16	**22.22** 7/8	**33.34** 1 5/16	**69.85** 2 3/4	**9.92** 25/64	**106.4** 4 3/16	**24.28** 61/64	**2.4** 3/32	**7.14** 9/32	**31.27** 1 15/64	**M10X1.5** 3/8 - 24	**1.300** **1.084**	2.87 2.39	**29170.8** 6570	**47952** 10800
ER39[1][2]	212	2 7/16	**110** 4.331	**65.09** 2 9/16	**31.75** 1 1/4	**25.4** 1	**39.69** 1 9/16	**76.60** 3 1/64	**9.92** 25/64	**116.3** 4 37/64	**28.24** 1.11	**2.4** 3/32	**6.75** 1 7/64	**36.83** 1 29/64	**M10X1.5** 3/8 - 24	**1.450**	3.20	**35875.2** 8080	**58164** 13100
ER47	215	2 15/16	**130** 5.1180	**77.79** 3 1/16	**38.1** 1 1/2	**33.33** 1 5/16	**44.45** 1 3/4	**91.68** 3 39/64	**11.91** 15/32	**139.7** 5 1/2	**33.02** 1.30	**2.8** 7/64	**6.35** 1/4	**44.78** 1 49/64	**M12X1.75** 7/16 -20	**2.210**	4.88	**44844** 10100	**68820** 15500
ER51	216	3 3/16	**140** 5.5110	**77.79** 3 1/16	**42.86** 1 11/16	**28.58** 1 1/8	**49.21** 1 15/16	**98.43** 3 7/8	**13.49** 17/32	**149.6** 5 57/64	**35.32** 1.39	**2.8** 7/64	**11.11** 7/16	**42.47** 1 43/64	**M12X1.75** 7/16 -20	**3.450**	7.61	**54168** 12200	**79476** 17900
ER55	217	3 7/16	**150** 5.905	**85.72** 3 3/8	**49.21** 1 15/16	**34.16** 1 11/32	**51.57** 2 1/32	**104.84** 4 1/8	**11.91** 7/16	**159.5** 6 1/4	**34.53** 1.36	**2.8** 7/64	**11.02** 7/16	**51.21** 2 1/64	**M12X1.75** 7/16 -20	–	–	**61716** 13900	**92796** 20900

[1]DD low-drag/low-torque version is available.
[2]Available with Shaft Guarding Technology modification.
NOTE: Bore tolerances: 1.1874 in. – 2.1874 in. nominal to +0.013 mm, +0.0005 in.
2.2500 in. – 3.1874 in. nominal to +0.015 mm, +0.0006 in.

STANDARD SERIES

RA-RR, RA-RRB NON-RELUBRICATABLE TYPES

- These bearings are an extended inner-ring type with a self-locking collar.
- Due to the positive contact, the land-riding R-seal provides improved protection against harmful contaminants and retains lubricant under severe operating conditions.
- RA-RR series are factory-prelubricated and have cylindrical outside diameters.
- RA-RRB series have spherical outside diameters for use in housings with corresponding spherical inside surfaces to provide unrestricted initial alignment.

Suggested shaft tolerances:

1/2 in. – 1 15/16 in., nominal to -0.013 mm, -0.0005 in.;
2 in. – 2 3/16 in., nominal to -0.025 mm, -0.0010 in.

To order, specify bearing number followed by "+ COL".

Example: RA100RRB + COL.

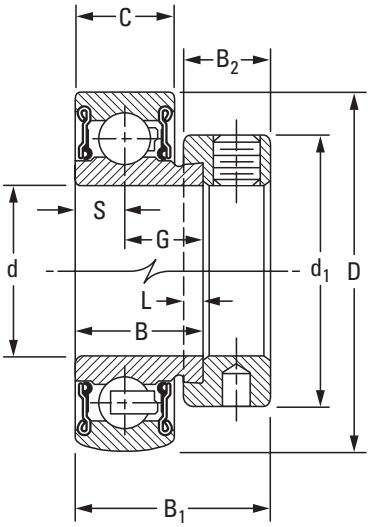

Bearing No. Cylindrical O.D.	Bearing No. Spherical O.D.	Collar No.	Basic Outer-Ring Size	Shaft Dia. d	O.D. D	Ring Widths Inner B	Ring Widths Outer C	S	G	L	d_1	B_2	B_1	Brg. and Collar Wt.		Static Load Rating C_o	Extended Dynamic Load Rating C_E
				in. **mm**	**mm** in.	**mm** in.	**mm** in.	**mm** in.	**mm** in.	**mm** in.	**mm** in.	**mm** in.	**mm** in.	**kg**	lbs.	**N** lbs.	**N** lbs.
RA008RR	RA008RRB	S1008K	203	1/2	**40** 1.5748	**19.05** 0.750	**13** 0.512[1]	**6.50** 0.256	**12.55** 0.494	**4.0** 5/32	**28.60** 1 1/8	**13.5** 17/32	**28.6** 1 1/8	**0.154**	0.34	**4700** 1060	**10600** 2360
RA009RR	RA009RRB	S1009K		9/16										**0.145**	0.32		
RA010RR	RA010RRB	S1010K		5/8										**0.127**	0.28		
RAE17RR	RAE17RRB	SE17K		**17**										**0.127**	0.28		
RA012RR	RA012RRB	S1012K	204	3/4	**47** 1.8504	**21.44** 0.844	**15** 0.591[2]	**7.49** 0.295	**13.92** 0.548	**4.0** 5/32	**33.30** 1 5/16	**13.5** 17/32	**31.0** 1 7/32	**0.132**	0.29	**6200** 1400	**14300** 3200
RAE20RR	RAE20RRB	SE20K		**20**										**0.132**	0.29		
RA013RR	RA013RRB	S1013K	205	13/16	**52** 2.0472	**21.44** 0.844	**15** 0.591	**7.49** 0.295	**13.92** 0.548	**4.0** 5/32	**38.10** 1 1/2	**13.5** 17/32	**31.0** 1 7/32	**0.231**	0.51	**7700** 1730	**15800** 3550
RA014RR	RA014RRB	S1014K		7/8										**0.213**	0.47		
RA015RR	RA015RRB	S1015K		15/16										**0.200**	0.44		
RA100RR	RA100RRB	S1100K		1										**0.186**	0.41		
RAE25RR	RAE25RRB	SE25K		**25**										**0.186**	0.41		
RA101RR	RA101RRB	S1101K	206	1 1/16	**62** 2.4409	**23.82** 0.938	**18** 0.709	**8.99** 0.354	**14.81** 0.583	**4.0** 5/32	**44.10** 1 47/64	**15.9** 5/8	**35.7** 1 13/32	**0.349**	0.77	**11100** 2500	**21800** 4900
RA102RR	RA102RRB	S1102K		1 1/8										**0.327**	0.72		
RA103RR	RA103RRB	S1103K		1 3/16										**0.318**	0.70		
RA103RR2	RA103RRB2	S1103K3		1 1/4										**0.295**	0.65		
RAE30RR	RAE30RRB	SE30K		**30**										**0.318**	0.70		
RA104RR	RA104RRB	S1104K	207	1 1/4	**72** 2.8346	**25.40** 1.000	**19** 0.748	**9.50** 0.374	**15.90** 0.626	**4.0** 5/32	**54.40** 2 1/8	**17.1** 43/64	**38.9** 1 17/32	**0.562**	1.24	**15100** 3400	**28500** 6400
RA105RR	RA105RRB	S1105K		1 5/16										**0.540**	1.19		
RA106RR	RA106RRB	S1106K		1 3/8										**0.513**	1.13		
RA107RR	RA107RRB	S1107K		1 7/16										**0.476**	1.05		
RAE35RR	RAE35RRB	SE35K		**35**										**0.513**	1.13		

[1]Spherical O.D. outer-ring width is 12 mm (0.472 in.).
[2]Spherical O.D. outer-ring width is 14 mm (0.551 in.).
[3]Spherical O.D. outer-ring width is 21 mm (0.827 in.).
NOTE: Bore tolerance is nominal to +0.013 mm, +0.0005 in.

Continued on next page.

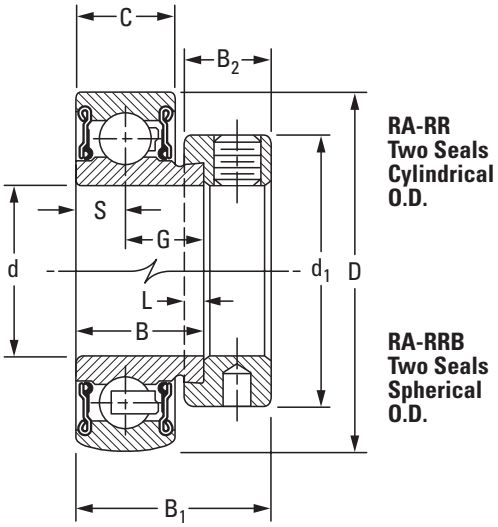

Continued from previous page.

Bearing No. Cylindrical O.D.	Bearing No. Spherical O.D.	Collar No.	Basic Outer-Ring Size	Shaft Dia. d	O.D. D	Ring Widths Inner B	Ring Widths Outer C	S	G	L	d_1	B_2	B_1	Brg. and Collar Wt.		Static Load Rating C_o	Extended Dynamic Load Rating C_E
				in. **mm**	**mm** in.	**mm** in.	**mm** in.	**mm** in.	**mm** in.	**mm** in.	**mm** in.	**mm** in.	**mm** in.	**kg**	lbs.	**N** lbs.	**N** lbs.
RA108RR	RA108RRB	S1108K	208	1 1/2	**80** 3.1496	**30.18** 1.188	**22** 0.866[3]	**11.00** 0.433	**19.18** 0.755	**4.8** 3/16	**60.30** 2 3/8	**18.3** 23/32	**43.7** 1 23/32	**0.694**	1.53	**19600** 4400	**36000** 8150
RA109RR	RA109RRB	S1109K		1 9/16										**0.649**	1.43		
RAE40RR	RAE40RRB	SE40K		**40**										**0.649**	1.43		
RA110RR	RA110RRB	S1110K	209	1 5/8	**85** 3.3465	**30.18** 1.188	**22** 0.866	**11.00** 0.433	**19.18** 0.755	**4.8** 3/16	**63.50** 2 1/2	**18.3** 23/32	**43.7** 1 23/32	**0.780**	1.72	**20000** 4500	**36000** 8150
RA111RR	RA111RRB	S1111K		1 11/16										**0.735**	1.62		
RA112RR	RA112RRB	S1112K		1 3/4										**0.680**	1.50		
RAE45RR	RAE45RRB	SE45K		**45**										**0.680**	1.50		
RA113RR	RA113RRB	S1113K	210	1 13/16	**90** 3.5433	**30.18** 1.188	**22** 0.866	**11.00** 0.433	**19.18** 0.755	**4.8** 3/16	**69.90** 2 3/4	**18.3** 23/32	**43.7** 1 23/32	**0.880**	1.94	**22700** 5100	**39200** 8800
RA114RR	RA114RRB	S1114K		1 7/8										**0.830**	1.83		
RA115RR	RA115RRB	S1115K		1 15/16										**0.771**	1.79		
RA115RR2	RA115RRB2	S1115K2		2										**0.717**	1.58		
RAE50RR	RAE50RRB	SE50K		**50**										**0.771**	1.79		
RA200RR	RA200RRB	S1200K	211	2	**100** 3.9370	**32.54** 1.281	**24** 0.945	**11.99** 0.472	**20.55** 0.809	**4.8** 3/16	**76.20** 3	**20.6** 13/16	**48.4** 1 29/32	**0.962**	2.12	**28500** 6400	**48000** 10800
RA201RR	RA201RRB	S1201K		2 1/16										**0.898**	1.98		
RA202RR	RA202RRB	S1202K		2 1/8										**0.857**	1.89		
RA203RR	RA203RRB	S1203K		2 3/16										**0.807**	1.78		
RAE55RR	RAE55RRB	SE55K		**55**										**0.807**	1.78		

(1)Spherical O.D. outer-ring width is 12 mm (0.472 in.).
(2)Spherical O.D. outer-ring width is 14 mm (0.551 in.).
(3)Spherical O.D. outer-ring width is 21 mm (0.827 in.).
NOTE: Bore tolerance is nominal to +0.013 mm, +0.0005 in.

GRA-RR, GRA-RRB RELUBRICATABLE TYPES

- GRA-RR-series bearings are the same as the RA-RR series and have a provision for relubrication.
- GRA-RR series have cylindrical outside diameters.
- GRA-RRB have spherical outside diameters

Suggested shaft tolerances:

1/2 in. – 1 15/16 in., nominal to -0.13 mm, -0.0005 in.;
2 in. – 2 3/16 in., nominal to -0.025 mm, -0.0010 in.

To order, specify bearing number followed by "+ COL".
Example: GRA100RRB + COL.

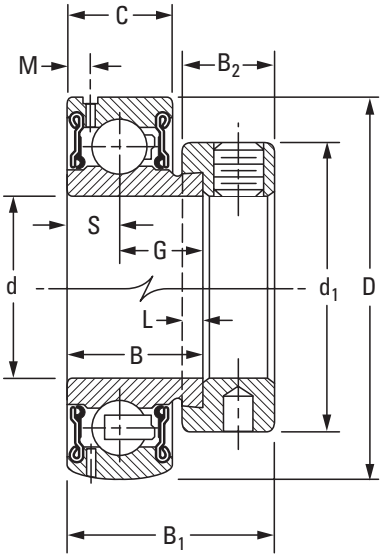

Bearing No. Cylindrical O.D.	Bearing No. Spherical O.D.	Collar No.	Basic Outer-Ring Size	Shaft Dia. d	O.D. D	Ring Widths Inner B	Ring Widths Outer C	S	G	L	d_1	B_2	M	B_1	Brg. and Collar Wt.		Static Load Rating C_o	Extended Dynamic Load Rating C_E
				in. mm	mm in.	mm in.	mm in.	mm in.	mm in.	mm in.	mm in.	mm in.	mm in.	mm in.	kg	lbs.	N lbs.	N lbs.
GRA008RR	GRA008RRB	S1008K	203	1/2	40 1.5748	19.05 0.750	13 0.512[1]	6.50 0.256	12.55 0.494	4.0 5/32	28.6 1 1/8	13.5 17/32	2.72 0.107	28.6 1 1/8	0.154	0.34	4700 1060	10600 2360
–	GRA009RRB	S1009K		9/16											0.145	0.32		
GRA010RR	GRA010RRB	S1010K		5/8											0.127	0.28		
GRAE17RR	GRAE17RRB	SE17K		17											0.127	0.28		
GRA012RR	GRA012RRB	S1012K	204	3/4	47 1.8504	21.44 0.844	15 0.591[2]	7.49 0.295	13.92 0.548	4.0 5/32	33.3 1 5/16	13.5 17/32	3.05 0.120	31.0 1 7/32	0.132	0.29	6200 1400	14300 3200
GRAE20RR	GRAE20RRB	SE20K		20											0.132	0.29		
–	GRA013RRB	S1013K	205	13/16	52 2.0472	21.44 0.844	15 0.591	7.49 0.295	13.92 0.548	4.0 5/32	38.1 1 1/2	13.5 17/32	3.61 0.142	31.0 1 7/32	0.231	0.51	7700 1730	15800 3550
GRA014RR	GRA014RRB	S1014K		7/8											0.213	0.47		
–	GRA015RRB	S1015K		15/16											0.200	0.44		
GRA100RR	GRA100RRB	S1100K		1											0.186	0.41		
GRAE25RR	GRAE25RRB	SE25K		25											0.186	0.41		
GRA101RR	GRA101RRB	S1101K	206	1 1/16	62 2.4409	23.83 0.938	18 0.709	8.99 0.354	14.81 0.583	4.0 5/32	44.1 1 47/64	15.9 5/8	4.17 0.164	35.7 1 13/32	0.349	0.77	11100 2500	21800 4900
GRA102RR	GRA102RRB	S1102K		1 1/8											0.327	0.72		
GRA103RR	GRA103RRB	S1103K		1 3/16											0.318	0.70		
GRA103RR2	GRA103RRB2	S1103K3		1 1/4											0.295	0.65		
GRAE30RR	GRAE30RRB	SE30K		30											0.318	0.70		
GRA104RR	GRA104RRB	S1104K	207	1 1/4	72 2.8346	25.40 1.000	19 0.748	9.50 0.374	15.90 0.626	4.0 5/32	54.0 2 1/8	17.1 43/64	3.68 0.145	38.9 1 17/32	0.562	1.24	15100 3400	28500 6400
–	GRA105RRB	S1105K		1 5/16											0.540	1.19		
–	GRA106RRB	S1106K		1 3/8											0.513	1.13		
–	GRA107RRB	S1107K		1 7/16											0.476	1.05		
GRAE35RR	GRAE35RRB	SE35K		35											0.513	1.13		

[1]Spherical O.D. outer-ring width is 12 mm (0.472 in.).
[2]Spherical O.D. outer-ring width is 14 mm (0.551 in.).
[3]Spherical O.D. outer-ring width is 21 mm (0.827 in.).
NOTE: Bore tolerance is nominal to +0.013 mm, +0.0005 in.

Continued on next page.

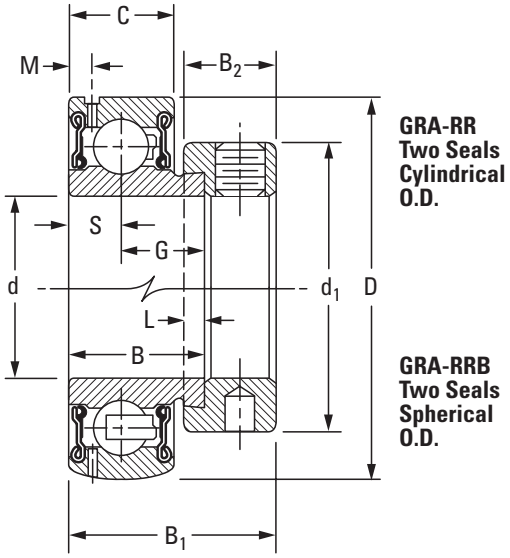

Continued from previous page.

Bearing No. Cylindrical O.D.	Bearing No. Spherical O.D.	Collar No.	Basic Outer-Ring Size	Shaft Dia. d	O.D. D	Ring Widths Inner B	Ring Widths Outer C	S	G	L	d_1	B_2	M	B_1	Brg. and Collar Wt.		Static Load Rating C_o	Extended Dynamic Load Rating C_E
				in. **mm**	**mm** in.	**mm** in.	**mm** in.	**mm** in.	**mm** in.	**mm** in.	**mm** in.	**mm** in.	**mm** in.	**mm** in.	**kg**	lbs.	**N** lbs.	**N** lbs.
GRA108RR	GRA108RRB	S1108K	208	1 1/2	**80** 3.1496	**30.18** 1.188	**22** 0.866[3]	**11.00** 0.433	**19.18** 0.755	**4.8** 3/16	**60.3** 2 3/8	**18.3** 23/32	**4.17** 0.164	**43.7** 1 23/32	**0.694**	1.53	**19600** 4400	**36000** 8150
–	GRA109RRB	S1109K		1 9/16											**0.649**	1.43		
GRAE40RR	GRAE40RRB	SE40K		**40**											**0.649**	1.43		
–	GRA110RRB	S1110K	209	1 5/8	**85** 3.3465	**30.18** 1.188	**22** 0.866	**11.00** 0.433	**19.18** 0.755	**4.8** 3/16	**63.5** 2 1/2	**18.3** 23/32	**4.55** 0.179	**43.7** 1 23/32	**0.780**	1.72	**20500** 4600	**36300** 8160
–	GRA111RRB	S1111K		1 11/16											**0.735**	1.62		
–	GRA112RRB	S1112K		1 3/4											**0.680**	1.50		
–	GRAE45RRB	SE45K		**45**											**0.680**	1.50		
–	GRA113RRB	S1113K	210	1 13/16	**90** 3.5433	**30.18** 1.188	**22** 0.866	**11.00** 0.433	**19.18** 0.755	**4.8** 3/16	**69.9** 2 3/4	**18.3** 23/32	**4.44** 0.175	**43.7** 1 23/32	**0.880**	1.94	**22700** 5100	**39200** 8800
–	GRA114RRB	S1114K		1 7/8											**0.830**	1.83		
–	GRA115RRB	S1115K		1 15/16											**0.771**	1.79		
–	GRA115RRB2	S1115K2		2											**0.717**	1.58		
–	GRAE50RRB	SE50K		**50**											**0.771**	1.79		
–	GRA200RRB	S1200K	211	2	**100** 3.9370	**32.54** 1.281	**24** 0.945	**11.99** 0.472	**20.55** 0.809	**4.8** 3/16	**76.2** 3	**20.6** 13/16	**4.90** 0.193	**48.4** 1 29/32	**0.962**	2.12	**28500** 6400	**48000** 10800
–	GRA201RRB	S1201K		2 1/16											**0.898**	1.98		
–	GRA202RRB	S1202K		2 1/8											**0.857**	1.89		
–	GRA203RRB	S1203K		2 3/16											**0.807**	1.78		
–	GRAE55RRB	SE55K		**55**											**0.807**	1.78		

[1]Spherical O.D. outer-ring width is 12 mm (0.472 in.).
[2]Spherical O.D. outer-ring width is 14 mm (0.551 in.).
[3]Spherical O.D. outer-ring width is 21 mm (0.827 in.).
NOTE: Bore tolerance is nominal to +0.013 mm, +0.0005 in.

RA-DD NON-RELUBRICATABLE TYPES

- These bearings are an extended inner-ring type with a self-locking collar.
- The two non-contact grease shields retain lubricant, provide protection against harmful contaminants and offer improved high-speed, low-torque performance.
- RA-DD series are factory-prelubricated and have cylindrical outside diameters.

Suggested shaft tolerances:

½ in. – 1 15/16 in., nominal to -0.013 mm, -0.0005 in.;
2 in. – 2 3/16 in., nominal to -0.025 mm, -0.0010 in.

To order, specify bearing number followed by "+ COL".
Example: RA100DD + COL.

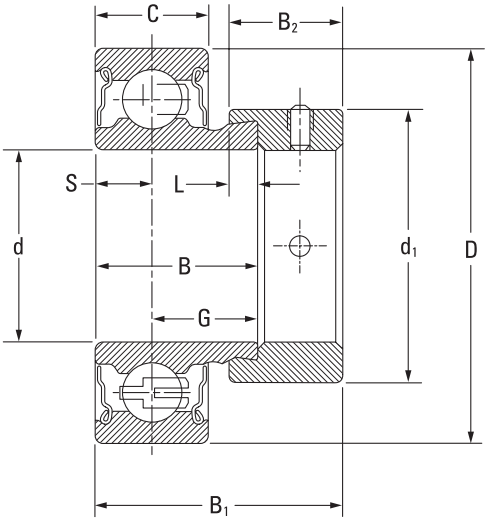

Bearing No.	Collar No.	Basic Outer-Ring Size	Shaft Dia. d	O.D. D	Ring Widths Inner B	Ring Widths Outer C	S	G	L	d_1	B_2	B_1	Static Load Rating C_o	Extended Dynamic Load Rating C_E
			in. **mm**	**mm** in.	**mm** in.	**mm** in.	**mm** in.	**mm** in.	**mm** in.	**mm** in.	**mm** in.	**mm** in.	**N** lbs.	**N** lbs.
RA008DD	S1008K	203	½	**40.00** 1.575	**19.05** 0.750	**13.00** 0.512	**6.50** 0.256	**12.55** 0.494	**3.97** 5/32	**28.58** 1 1/8	**13.49** 17/32	**28.58** 1 1/8	**4400** 1000	**10600** 2360
RA009DD	S1009K		9/16											
RA010DD[1]	S1010K		5/8											
RAE17DD	SE17K		**17**											
RA012DD	S1012K	204	¾	**47.00** 1.850	**21.44** 0.844	**15.01** 0.591	**7.49** 0.295	**13.92** 0.548	**3.97** 5/32	**33.34** 1 5/16	**13.49** 17/32	**30.96** 1 7/32	**6200** 1400	**14300** 3200
RAE20DD	SE20K		**20**											
RA013DD	S1013K	205	13/16	**52.00** 2.047	**21.44** 0.844	**15.01** 0.591	**7.49** 0.295	**13.92** 0.548	**3.97** 5/32	**38.10** 1 1/2	**13.49** 17/32	**30.96** 1 7/32	**6950** 1560	**15600** 3450
RA014DD[1]	S1014K		7/8											
RA015DD	S1015K		15/16											
RA100DD	S1100K		1											
RAE25DD	SE25K		**25**											
RA101DD	S1101K	206	1 1/16	**62.00** 2.441	**23.83** 0.938	**18.01** 0.709	**8.99** 0.354	**14.81** 0.583	**3.97** 5/32	**44.45** 1 3/4	**15.88** 5/8	**35.72** 1 13/32	**10000** 2280	**21600** 4800
RA102DD	S1102K		1 1/8											
RA103DD[1]	S1103K		1 3/16											
RA103DD2	S1103K3		1 1/4S											
RAE30DD	SE30K		**30**											
RA104DD	S1104K	207	1 1/4	**72.00** 2.835	**25.40** 1.000	**19.00** 0.748	**9.50** 0.374	**15.90** 0.626	**3.97** 5/32	**53.98** 2 1/8	**17.07** 43/64	**38.89** 1 17/32	**13700** 3050	**28500** 6400
RA105DD	S1105K		1 5/16											
RA106DD	S1106K		1 3/8											
RA107DD[1]	S1107K		1 7/16											
RAE35DD	SE35K		**35**											
RA108DD[1]	S1108K	208	1 1/2	**80.00** 3.150	**30.18** 1.188	**22.00** 0.866	**11.00** 0.433	**19.18** 0.755	**4.76** 3/16	**60.33** 2 3/8	**18.26** 23/32	**43.66** 1 23/32	**17600** 4000	**36000** 8150
RA109DD	S1109K		1 9/16											
RAE40DD	SE40K		**40**											

[1]Popular sizes.
NOTE: Bore tolerance is nominal to +0.013 mm, +0.0005 in.

YA-RR, YA-RRB NON-RELUBRICATABLE TYPES

- These bearings are an extended inner-ring type and have specially designed set screws with unique thread form.
- The thread form in both series locks the bearing to the shaft so they are resistant to loosening during operation.
- A positive contact, land-riding R-seal provides improved protection against harmful contaminants in both series and retains lubricant under severe operating conditions.
- A 6/6 molded nylon retainer has proved effective under conditions of misalignment.
- YA-RR series has cylindrical outside diameters.
- YA-RRB series has spherical outside diameters for use in housings with corresponding spherical inside surfaces. This provides unrestricted initial self-alignment.

Suggested shaft tolerances:

1/2 in. – 1 15/16 in., nominal to -0.013 mm, -0.0005 in.;
2 in. – 2 3/16 in., nominal to -0.025 mm, -0.0010 in.

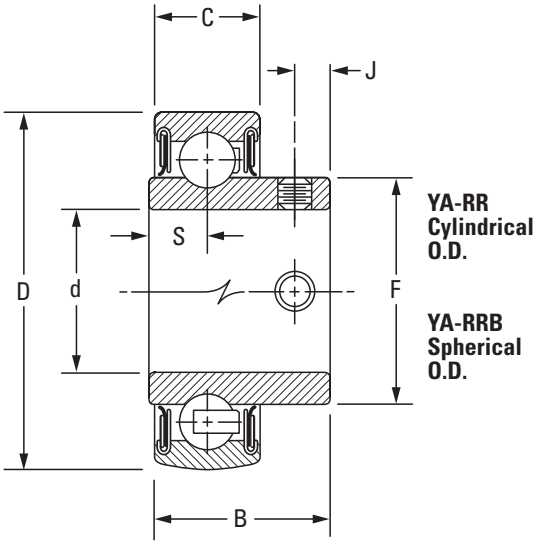

Bearing No. Cylindrical O.D.	Bearing No. Spherical O.D.	Basic Outer-Ring Size	Shaft Dia. d	O.D. D	Ring Widths Inner B	Ring Widths Outer C	S	F	J	Set Screw Size	Brg. Wt.	Static Load Rating C_o	Extended Dynamic Load Rating C_E
			in. **mm**	**mm** in.	**mm** in.	**mm** in.	**mm** in.	**mm** in.	**mm** in.	**mm** in.	**kg** lbs.	**N** lbs.	**N** lbs.
YA008RR	YA008RRB	203	1/2	**40**	**23.8**	**13**	**7.95**	**24.6**	**4.75**	**M5X.8**	**0.09**	**4700**	**10600**
YA010RR	YA010RRB		5/8	1.5748	0.938	0.5120[1]	0.313	31/32	0.187	10 – 32	0.19	1060	2360
YAE17RR	YAE17RRB		**17**										
YA012RR	YA012RRB	204	3/4	**47**	**27.0**	**15**	**8.86**	**29.0**	**6.02**	**M6X1**	**0.14**	**6200**	**14300**
YAE20RR	YAE20RRB		**20**	1.8504	1.063	0.5910[2]	0.349	1 9/64	0.237	1/4 – 28	0.30	1400	3200
YA014RR	YA014RRB	205	7/8										
YA015RR	YA015RRB		15/16	**52**	**28.2**	**15**	**8.84**	**33.7**	**6.35**	**M6X1**	**0.17**	**7700**	**15800**
YA100RR	YA100RRB		1	2.0472	1.109	0.5910	0.348	1 21/64	0.250	1/4 – 28	0.38	1730	3550
YAE25RR	YAE25RRB		**25**										
YA102RR	YA102RRB	206	1 1/8										
YA103RR	YA103RRB		1 3/16	**62**	**32.5**	**18**	**9.65**	**40.1**	**7.87**	**M8X1.25**	**0.26**	**11100**	**21800**
YA103RR2	YA103RRB2		1 1/4	2.4409	1.281	0.7090	0.380	1 37/64	0.310	5/16 – 24[3]	0.58	2500	4900
YAE30RR	YAE30RRB		**30**										
YA104RR	YA104RRB	207	1 1/4										
YA106RR	YA106RRB		1 3/8	**72**	**36.5**	**19**	**10.85**	**46.8**	**7.87**	**M8X1.25**	**0.42**	**15100**	**28500**
YA107RR	YA107RRB		1 7/16	2.8346	1.444	0.7480	0.427	1 27/32	0.310	5/16 – 24	0.93	3400	6400
YAE35RR	YAE35RRB		**35**										
YA108RR	YA108RRB	208	1 1/2	**80**	**39.3**	**22**	**11.63**	**52.4**	**7.87**	**M8X1.25**	**0.56**	**17600**	**36000**
YAE40RR	YAE40RRB		**40**	3.1496	1.538	0.8661[4]	0.458	2 1/16	0.310	5/16 – 24	1.24	4000	8150
YA110RR	YA110RRB	209	1 5/8										
YA111RR	YA111RRB		1 11/16	**85**	**42.0**	**22**	**13.46**	**57.9**	**7.87**	**M8X1.25**	**0.54**	**20500**	**36300**
YA112RR	YA112RRB		1 3/4	3.3465	1.655	0.8861	0.530	2 9/32	0.310	5/16 – 24	1.18	4500	8160
YAE45RR	YAE45RRB		**45**										
YA115RR	YA115RRB	210	1 15/16										
YA115RR2	YA115RRB2		2	**90**	**44.3**	**22**	**13.46**	**62.7**	**9.02**	**M10X1.5**	**0.57**	**22700**	**39200**
YAE50RR	YAE50RRB		**50**	3.5433	1.746	0.8661	0.530	2 15/32	0.355	3/8 – 24	1.25	5100	8800
YA200RR	YA200RRB	211	2										
YA203RR	YA203RRB		2 3/16	**100**	**46.6**	**24**	**14.60**	**69.8**	**9.02**	**M10X1.5**	**0.58**	**28500**	**48000**
YAE55RR	YAE55RRB		**55**	3.9370	1.833	0.9449	0.575	2 3/4	0.355	3/8 – 24	1.27	6400	10800

[1]Spherical O.D. outer-ring width is 12 mm (0.4724 in.).
[2]Spherical O.D. outer-ring width is 14 mm (0.5512 in.).
[3]YA103RR2 and YA103RRB2 use 1/4 – 28 in. set screw.
[4]Spherical O.D. outer-ring width is 21 mm (0.8268 in.).
NOTE: Bore tolerance is nominal to +0.013 mm, +0.0005 in.

GYA-RR, GYA-RRB RELUBRICATABLE TYPES

- GYA-RR-series bearings are dimensionally interchangeable with the YA-RR series.
- Both series have cylindrical outside diameters and can be used in standard cylindrical housings.
- GYA-RRB series have spherical outside diameters, providing unrestricted initial alignment. This series is used in housings with corresponding spherical inside surfaces.

Suggested shaft tolerances:

½ in.- 1 15/16 in., nominal to -0.013 mm, -0.0005 in.;
2 in. – 2 3/16 in., nominal to -0.025 mm, -0.0010 in.

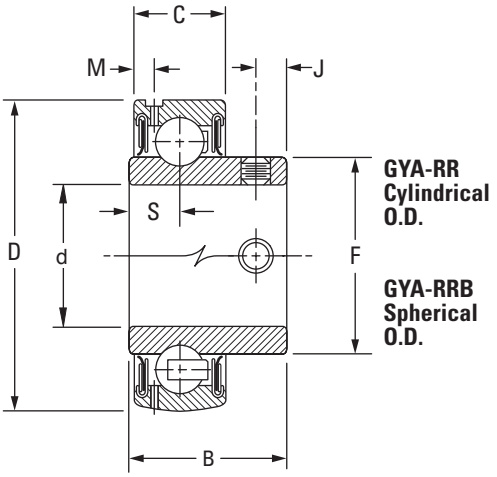

Bearing No. Cylindrical O.D.	Bearing No. Spherical O.D.	Basic Outer-Ring Size	Shaft Dia. d	O.D. D	Ring Widths Inner B	Ring Widths Outer C	S	F	M	J	Set Screw Size	Brg. Wt.	Static Load Rating C_o	Extended Dynamic Load Rating C_E
			in. **mm**	**mm** in.	**mm** in.	**mm** in.	**mm** in.	**mm** in.	**mm** in.	**mm** in.	**mm** in.	**kg** lbs.	**N** lbs.	**N** lbs.
GYA008RR	GYA008RRB	203	½	**40**	**23.8**	**12**	**7.95**	**24.6**	**2.72**	**4.75**	**M5X.8**	**0.09**	**4700**	**10600**
GYA010RR	GYA010RRB		⅝	1.5748	0.938	0.4720	0.313	31/32	0.107	0.187	10 – 32	0.19	1060	2360
GYAE17RR	GYAE17RRB		**17**											
GYA012RR	GYA012RRB	204	¾	**47**	**27.0**	**14**	**8.86**	**29.0**	**3.05**	**6.02**	**M6X1**	**0.14**	**6200**	**14300**
GYAE20RR	GYAE20RRB		**20**	1.8504	1.063	0.5510	0.349	1 9/64	0.120	0.237	¼ – 28	0.30	1400	3200
GYA014RR	GYA014RRB	205	⅞	**52**	**28.2**	**15**	**8.84**	**33.7**	**3.61**	**6.35**	**M6X1**	**0.17**	**7700**	**15800**
GYA015RR	GYA015RRB		15/16	2.0472	1.109	0.5910	0.348	1 21/64	0.142	0.250	¼ – 28	0.38	1730	3550
GYA100RR	GYA100RRB		1											
GYAE25RR	GYAE25RRB		**25**											
GYA102RR	GYA102RRB	206	1 ⅛	**62**	**32.5**	**18**	**9.65**	**40.1**	**4.17**	**7.87**	**M8X1.25**	**0.26**	**11100**	**21800**
GYA103RR	GYA103RRB		1 3/16	2.4409	1.281	0.7090	0.380	1 37/64	0.164	0.310	5/16 – 24[1]	0.58	2500	4900
GYA103RR2	GYA103RRB2		1 ¼											
GYAE30RR	GYAE30RRB		**30**											
GYA104RR	GYA104RRB	207	1 ¼	**72**	**36.5**	**19**	**10.85**	**46.8**	**3.68**	**7.87**	**M8X1.25**	**0.42**	**15100**	**28500**
GYA106RR	GYA106RRB		1 ⅜	2.8346	1.444	0.7480	0.427	1 27/32	0.145	0.310	5/16 – 24	0.93	3400	6400
GYA107RR	GYA107RRB		1 7/16											
GYAE35RR	GYAE35RRB		**35**											
GYA108RR	GYA108RRB	208	1 ½	**80**	**39.3**	**22**	**11.63**	**52.4**	**4.17**	**7.87**	**M8X1.25**	**0.56**	**17600**	**36000**
GYAE40RR	GYAE40RRB		**40**	3.1496	1.538	0.8661	0.458	2 1/16	0.164	0.310	5/16 – 24	1.24	4000	8150
GYA110RR	GYA110RRB	209	1 ⅝	**85**	**42**	**22**	**13.46**	**57.9**	**4.54**	**7.87**	**M8X1.25**	**0.54**	**20000**	**36000**
GYA111RR	GYA111RRB		1 11/16	3.3465	1.655	0.8661	0.530	2 9/32	0.179	0.310	5/16 – 24	1.18	4500	8150
GYA112RR	GYA112RRB		1 ¾											
GYAE45RR	GYAE45RRB		**45**											
GYA115RR	GYA115RRB	210	1 15/16	**90**	**44.3**	**22**	**13.46**	**62.7**	**4.44**	**9.02**	**M10X1.5**	**0.57**	**22700**	**39200**
GYA115RR2	GYA115RRB2		2	3.5433	1.746	0.8661	0.530	2 15/32	0.175	0.355	⅜ – 24	1.25	5100	8800
GYAE50RR	GYAE50RRB		**50**											
GYA200RR	GYA200RRB	211	2	**100**	**46.6**	**24**	**14.60**	**69.8**	**4.90**	**9.02**	**M10X1.5**	**0.58**	**28500**	**48000**
GYA203RR	GYA203RRB		2 3/16	3.9370	1.833	0.9449	0.575	2 ¾	0.193	0.355	⅜ – 24	1.27	6400	10800
GYAE55RR	GYAE55RRB		**55**											

[1]GYA103RR2 and GYA103RRB2 use ¼ – 28 in. set screw.
NOTE: Bore tolerance is nominal to +0.013 mm, +0.0005 in.

LIGHT SERIES

RAL-NPPB NON-RELUBRICATABLE TYPES

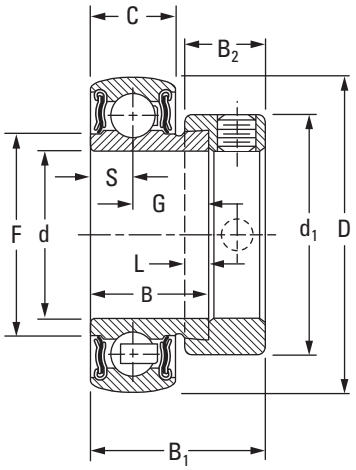

- RAL series are high-quality, compact, low-cost bearings and are intended for use in lightly loaded applications.
- RAL series are on extended inner-ring type with self-locking collars.
- Prelubricated RAL series incorporate the positive contact, land-riding R-seal. The seal has proved effective in the retention of lubricants and exclusion of foreign matter under extreme service conditions.
- RAL-NPPD-series bearings have spherical outside diameters providing unrestricted initial alignment.
- This bearing is used in housings with corresponding spherical inside surfaces.

Suggested shaft tolerances:

½ in. – 1 ¼ in., nominal to -0.013 mm, -0.0005 in.

To order, specify bearing number followed by "+ COL".

Example: RAL100NPPB + COL.

Bearing No.	Collar No.	Basic Outer-Ring Size	Shaft Dia. d	O.D. D	Ring Widths Inner B	Ring Widths Outer C	S	G	F	L	d_1	B_2	B_1	Brg. and Collar Wt.		Static Load Rating C_o	Extended Dynamic Load Rating C_E
			in.	mm in.	mm in.	mm in.	mm in.	mm in.	mm in.	mm in.	mm in.	mm in.	mm in.	kg	lbs.	N lbs.	N lbs.
RAL008NPPB[1]	LS008K		½											–	–		
RAL009NPPB	LS009K	202	9/16	**35** 1.3780	**15.88** 5/8	**11** 0.433	**5.502** 0.2116	**10.373** 0.4084	**20.07** 0.790	**4.0** 5/32	**25.4** 1	**11.1** 7/16	**23.8** 15/16	–	–	**3000** 680	**7500** 1700
RAL010NPPB[1]	LS010K		5/8											**0.06**	0.13		
RAL012NPPB[1]	LS012K	9104	3/4	**42** 1.6535	**16.67** 21/32	**12** 0.472	**6.000** 0.2362	**10.663** 0.4198	**25.15** 0.990	**3.2** 1/8	**29.8** 1 11/64	**11.1** 7/16	**24.6** 31/32	**0.09**	0.20	**4400** 1000	**10400** 2320
RAL013NPPB	LS013K		13/16											–	–		
RAL014NPPB	LS014K	9105	7/8	**47** 1.8504	**17.46** 11/16	**12** 0.472	**6.000** 0.2362	**11.476** 0.4518	**29.67** 1.168	**4.0** 5/32	**36.1** 1 27/64	**11.9** 15/32	**25.4** 1	**0.11**	0.24	**4900** 1120	**11000** 2500
RAL015NPPB	LS015K		15/16											–	–		
RAL100NPPB[1]	LS100K		1											**0.10**	0.22		
RAL101NPPB	LS101K		1 1/16											–	–		
RAL102NPPB	LS102K	9106	1 1/8	**55** 2.1654	**18.27** 23/32	**13** 0.512	**6.500** 0.2559	**11.755** 0.4628	**36.32** 1.430	**4.0** 5/32	**42.5** 1 43/64	**11.9** 15/32	**26.2** 1 1/32	**0.13**	0.29	**6950** 1560	**14600** 3350
RAL103NPPB	LS103K		1 3/16											**0.13**	0.29		
RAL103NPPB2[1]	LS103K2		1 1/4											**0.13**	0.29		

[1]Also available with cylindrical O.D. Delete suffix B.
NOTE: Bore tolerance is nominal to +0.013 mm, +0.0005 in.

MEDIUM SERIES

GYM-KRRB INSERTS SET SCREW LOCK

- This series is designed to offer extended bearing life despite demanding industrial environments.
- The insert features a full-width inner ring, providing extra support along the shaft.
- The extra support feature, coupled with a flexible nylon retainer, allows the inserts to operate for extended periods with undersized shafts or in misalignment conditions.
- The inserts are equipped with a three-piece seal, protecting against corrosion, contamination and fiber wrap.
- The inserts also include nylon-patch set screws, resisting set screw back-out and providing superior holding power in applications with severe vibration.

Suggested shaft tolerances:

1 in. – 1 15/16 in., nominal to -0.013 mm, -0.0005 in.;

2 in. – 3 in., nominal to -0.025 mm, -0.0010 in.

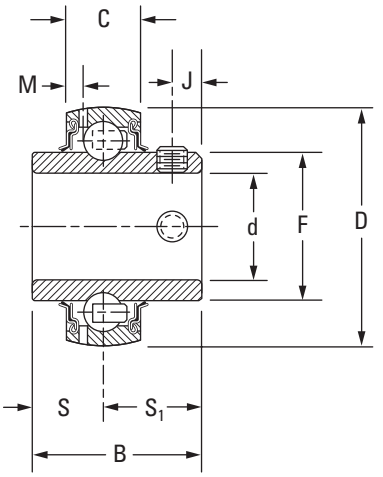

Bearing No. Spherical O.D.	Basic Outer-Ring Size	Shaft Dia. d	O.D. D	Ring Widths Inner B	Ring Widths Outer C	S	S_1	F	M	J	Set Screw Size	Brg. Wt.	Static Load Rating C_o	Extended Dynamic Load Rating C_E
		in.	mm in.	mm in.	mm in.	mm in.	mm in.	mm in.	mm in.	mm in.	mm in.	kg lbs.	N lbs.	N lbs.
GYM1100KRRB	206	1	**62** 2.4409	**38.10** 1.500	**18** 0.709	**15.88** 0.625	**22.22** 0.875	**40.31** 1.587	**3.96** 0.156	**7.62** 0.300	**M6 x 1** 1/4 – 28	**0.427** 0.94	**11100** 2500	**21800** 4900
GYM1103KRRB	207	1 3/16	**72** 2.8346	**42.87** 1.688	**19** 0.748	**17.48** 0.688	**25.40** 1.000	**46.18** 1.816	**3.68** 0.145	**7.82** 0.308	**M8 x 1.25** 5/16 – 24	**0.704** 1.55	**15100** 3400	**28500** 6400
GYM1107KRRB	208	1 7/16	**80** 3.1496	**49.22** 1.938	**21** 0.827	**19.05** 0.750	**30.17** 1.188	**52.27** 2.058	**4.06** 0.160	**8.00** 0.315	**M8 x 1.25** 5/16 – 24	**0.817** 1.80	**19600** 4400	**36300** 8150
GYM1108KRRB	209	1 1/2	**85** 3.3465	**49.22** 1.938	**22** 0.866	**19.05** 0.750	**30.17** 1.188	**52.27** 2.280	**4.55** 0.179	**8.00** 0.315	**M8 x 1.25** 5/16 – 24	**0.885** 1.95	**20000** 4500	**36300** 8150
GYM1111KRRB	210	1 11/16	**90** 3.5433	**51.59** 2.031	**22** 0.866	**19.05** 0.750	**32.54** 1.281	**62.84** 2.474	**4.70** 0.185	**10.00** 0.394	**M10 x 1.5** 3/8 – 24	**1.271** 2.80	**22700** 5100	**39200** 8800
GYM1112KRRB		1 3/4										**1.203** 2.65		
GYM1115KRRB	211	1 15/16	**100** 3.9370	**55.55** 2.187	**24** 0.945	**22.22** 0.875	**33.32** 1.312	**69.77** 2.747	**5.00** 0.197	**10.00** 0.394	**M10 x 1.5** 3/8 – 24	**1.634** 3.60	**28500** 6400	**48100** 10800
GY1200KRRB		2										**1.498** 3.30		
GYM1203KRRB	212	2 3/16	**110** 4.3307	**65.07** 2.562	**27** 1.063	**25.40** 1.000	**39.67** 1.562	**76.48** 3.011	**5.13** 0.202	**10.00** 0.394	**M10 x 1.5** 3/8 – 24	**2.225** 4.90	**35600** 8000	**58800** 13200
GY1204KRRB		2 1/4										**1.952** 4.30		
GYM1207KRRB	214	2 7/16	**125** 4.9213	**69.85** 2.750	**28** 1.102	**26.97** 1.062	**42.84** 1.687	**76.48** 3.422	**5.08** 0.200	**12.00** 0.472	**M12 x 1.75** 7/16 – 20	**2.996** 6.60	**43000** 9650	**69500** 15600
GYM1208KRRB		2 1/2										**2.860** 6.30		
GYM1211KRRB	215	2 11/16	**130** 5.1181	**77.80** 3.063	**29** 1.142	**33.32** 1.312	**44.45** 1.750	**91.92** 3.619	**5.56** 0.219	**12.00** 0.472	**M12 x 1.75** 7/16 – 20	**3.042** 6.70	**43600** 9800	**69500** 15600
GYM1215KRRB GYM1300KRRB	216	2 15/16 3	**140** 5.5118	**77.80** 3.063	**29** 1.142	**33.32** 1.312	**44.45** 1.750	**91.92** 3.619	**5.56** 0.219	**12.00** 0.472	**M12 x 1.75** 7/16 – 20	**3.087** 6.80	**53400** 12000	**80200** 18000

NOTE: Bore tolerance: 1/2 in. – 2 3/16 in., nominal to +0.013 mm, +0.0005 in.
2 1/4 in. – 3 in., nominal to +0.015 mm, +0.0006 in.

HEAVY SERIES

GN-KRRB RELUBRICATABLE TYPES

- The heavy series R-seal bearings are similar to the standard series and designed to withstand continuous, heavy or shock loads.
- This series has heavier-section 300-series bearings. They include a considerably thicker sealing member in the contact-type diaphragm seal.
- The design of the series ensures complete retention of the lubricant and positive exclusion of all contaminants.

Suggested shaft tolerances:

1 3/16 in. – 1 15/16 in., nominal to -0.013 mm, -0.0005 in.;
2 in. – 3 15/16 in., nominal to -0.025 mm, -0.0010 in.

To order, specify bearing number followed by "+ COL".
Example: GN303KRRB + COL.

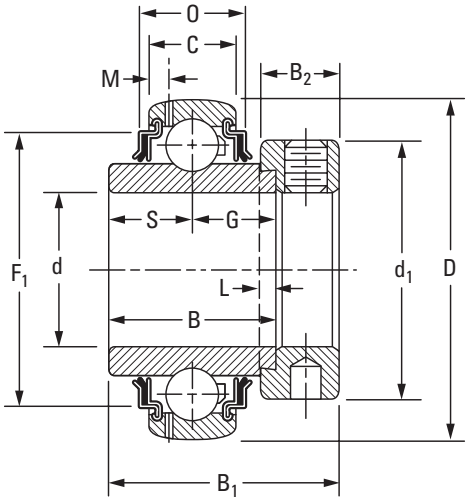

Bearing No.	Collar No.	Basic Outer-Ring Size	Shaft Dia. d	O.D. D	Ring Widths Inner B	Ring Widths Outer C	S	G	L	d_1	B_2	M	B_1	F_1	O	Brg. and Collar Wt.		Static Load Rating C_o	Extended Dynamic Load Rating C_E
			in.	mm in.	mm in.	mm in.	mm in.	mm in.	mm in.	mm in.	mm in.	mm in.	mm in.	mm in.	mm in.	kg	lbs.	N lbs.	N lbs.
GN103KRRB	SN103K	306	1 3/16	**72** 2.8346	**36.51** 1 7/16	**20** 0.787	**17.5** 11/16	**19.1** 3/4	**4.0** 5/32	**49.2** 1 15/16	**17.5** 11/16	**3.61** 0.142	**50.0** 1 31/32	**60.17** 2.369	**23.50** 0.925	**0.553**	1.22	**15800** 3560	**33100** 7440
GN104KRRB	SN104K	307	1 1/4	**80** 3.1496	**38.10** 1 1/2	**22** 0.866	**18.3** 23/32	**19.8** 25/32	**4.0** 5/32	**55.6** 2 3/16	**17.5** 11/16	**3.96** 0.156	**51.6** 2 1/32	**67.01** 2.638	**27.00** 1.063	**0.762**	1.68	**18300** 4120	**37100** 8340
GN105KRRB	SN105K		1 5/16													**0.744**	1.64		
GN106KRRB	SN106K		1 3/8													**0.726**	1.60		
GN107KRRB	SN107K		1 7/16													**0.708**	1.56		
GN108KRRB[1]	SN108K	308	1 1/2	**90** 3.5433	**41.28** 1 5/8	**25** 0.984	**19.8** 25/32	**21.4** 27/32	**4.8** 3/16	**63.5** 2 1/2	**20.6** 13/16	**4.62** 0.182	**57.2** 2 1/4	**75.06** 2.955	**26.67** 1.05	**1.152**	2.54	**26000** 5850	**49400** 11100
GN110KRRB	SN110K	309	1 5/8	**100** 3.9370	**42.86** 1 11/16	**27** 1.063	**19.8** 25/32	**23.0** 29/32	**4.8** 3/16	**69.9** 2 3/4	**20.6** 13/16	**5.00** 0.197	**58.7** 2 5/16	**82.58** 3.251	**28.52** 1.123	**1.656**	3.65	**31700** 7120	**58700** 13200
GN111KRRB	SN111K		1 11/16													**1.456**	3.21		
GN112KRRB[1]	SN112K		1 3/4													**1.388**	2.95		
GN114KRRB	SN114K	310	1 7/8	**110** 4.3307	**49.21** 1 15/16	**29** 1.142	**24.6** 31/32	**24.6** 31/32	**4.8** 3/16	**75.8** 2 63/64	**22.2** 7/8	**5.36** 0.211	**66.7** 2 5/8	**82.87** 3.654	**30.86** 1.215	**1.973**	4.35	**37900** 8510	**68500** 15400
GN115KRRB[1]	SN115K		1 15/16													**1.905**	4.20		
GN200KRRB	SN200K	311	2	**120** 4.7244	**55.56** 2 3/16	**31** 1.220	**27.8** 1 3/32	**27.8** 1 3/32	**4.8** 3/16	**82.6** 3 1/4	**22.2** 7/8	**5.49** 0.216	**73.0** 2 7/8	**101.78** 4.007	**37.47** 1.475	**2.132**	4.70	**44500** 10000	**79200** 17800
GN203KRRB	SN203K		2 3/16													**2.368**	5.22		

[1]Also available with cylindrical O.D. Delete suffix B. Example: GN108KRR.
NOTE: Bore tolerances: 1 3/16 in. – 2 3/16 in., nominal to +0.013 mm, +0.0005 in.;
2 1/4 in. – 3 3/16 in., nominal to +0.015 mm, +0.0006 in.

Continued on next page.

GN-KRRB RELUBRICATABLE TYPES *– continued*

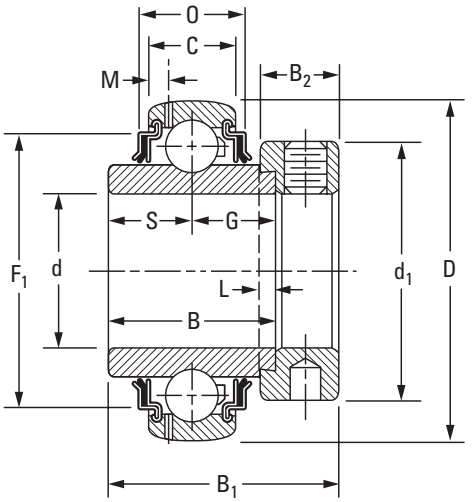

Continued from previous page.

Bearing No.	Collar No.	Basic Outer-Ring Size	Shaft Dia. d	O.D. D	Ring Widths Inner B	Ring Widths Outer C	S	G	L	d_1	B_2	M	B_1	F_1	O	Brg. and Collar Wt.		Static Load Rating C_o	Extended Dynamic Load Rating C_E
			in.	mm in.	mm in.	mm in.	mm in.	mm in.	mm in.	mm in.	mm in.	mm in.	mm in.	mm in.	mm in.	kg	lbs.	N lbs.	N lbs.
GN207KRRB	SN207K	312	2 7/16	**130** 5.1181	**61.91** 2 7/16	**33** 1.299	**31.0** 1 7/32	**31.0** 1 7/32	**6.4** 1/4	**88.9** 3 1/2	**23.8** 15/16	**5.84** 0.230	**79.4** 3 1/8	**108.52** 4.312	**38.99** 1.535	**2.839**	6.26	**52000** 11700	**90700** 20400
GN211KRRB	SO211K	314	2 11/16	**150** 5.9055	**68.26** 2 11/16	**37** 1.457	**34.1** 1 11/32	**34.1** 1 11/32	**6.4** 1/4	**101.6** 4	**27.0** 1 1/16	**6.73** 0.265	**88.9** 3 1/2	**126.31** 4.973	**44.96** 1.770	**4.509**	9.94	**68100** 15300	**115700** 26000
GN215KRRB	SN215K	315	2 15/16	**160** 6.2992	**74.61** 2 15/16	**39** 1.535	**37.3** 1 15/32	**37.3** 1 15/32	**6.4** 1/4	**112.7** 4 7/16	**31.8** 1 1/4	**6.48** 0.255	**100.0** 3 15/16	**133.02** 5.273	**51.13** 2.013	**5.634**	12.42	**77000** 17300	**125900** 28300
GN303KRRB	SN303K	316	3 3/16	**170** 6.6929	**80.96** 3 3/16	**41** 1.614	**40.5** 1 19/32	**40.5** 1 19/32	**6.4** 1/4	**119.1** 4 11/16	**31.8** 1 1/4	**7.26** 0.286	**106.4** 4 3/16	**142.82** 5.623	**51.05** 2.010	**7.126**	15.71	**86300** 19400	**136600** 30700
GN307KRRB	SN307K	318	3 7/16	**190** 7.4803	**87.31** 3 7/16	**45** 1.772	**42.1** 1 21/32	**42.1** 1 21/32	**7.9** 5/16	**133.4** 5 1/4	**36.5** 1 7/16	**8.18** 0.322	**115.9** 4 9/16	**161.37** 6.353	**52.63** 2.072	**9.190**	20.26	**107200** 24100	**158400** 35600
GN315KRRB	SN315K	320	3 15/16	**215** 8.4646	**100.01** 3 15/16	**49** 1.929	**50.0** 1 31/32	**50.0** 1 31/32	**7.9** 5/16	**146.1** 5 3/4	**36.5** 1 7/16	**7.82** 0.308	**129.6** 5 1/16	**182.85** 7.199	**59.36** 2.337	**12.233**	26.97	**140600** 31600	**191700** 43100

(1)Also available with cylindrical O.D. Delete suffix B. Example: GN108KRR.
NOTE: Bore tolerances: 1 3/16 in. – 2 3/16 in., nominal to +0.013 mm, +0.0005 in.;
2 1/4 in. – 3 3/16 in., nominal to +0.015 mm, +0.0006 in.

GN-KLLB SPECIAL DUTY

- The GN-KLLB-series ball bearings are heavy and are similar in design to the standard LL (Mechani-Seal) wide-inner-ring ball bearings.
- The GN-KLLB series have heavier-section 300-series bearings.
- Unlike standard series, the seal in this heavy series is a three-piece construction and includes two fixed inner members and an external rotation slinger.

Suggested shaft tolerances:

1/8 in. – 1 15/16 in., nominal to -0.013 mm, -0.0005 in.;
2 in. – 2 15/16 in., nominal to -0.025 mm, -0.0010 in.

To order, specify bearing number followed by "+ COL".
Example: GN104KLLB + COL.

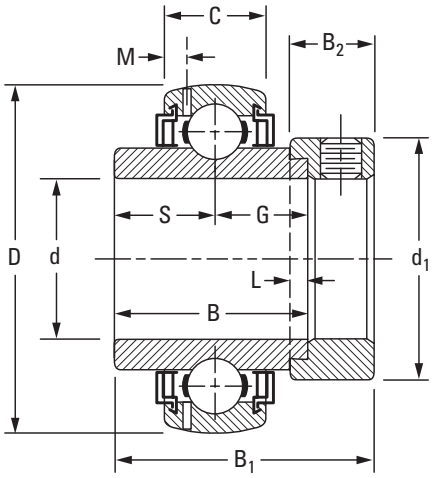

Bearing No.	Collar No.	Basic Outer-Ring Size	Shaft Dia. d	O.D. D	Ring Widths Inner B	Ring Widths Outer C N-KLL	Ring Widths Outer C GN-KLLB	S	G	L	d_1	B_2	M	B_1	Brg. and Collar Wt.		Static Load Rating C_o	Extended Dynamic Load Rating C_E
			in.	mm in.	mm in.	mm in.	mm in.	mm in.	mm in.	mm in.	mm in.	mm in.	mm in.	mm in.	kg	lbs.	N lbs.	N lbs.
GN102KLLB	SN102K	306	1 1/8	72	36.51	19	20	17.46	19.05	3.9	49.21	17.46	3.61	1.97	0.554	1.22	15800	33100
GN103KLLB	SN103K		1 3/16	2.8346	1 7/16	0.7480	0.7874	11/16	3/4	5/32	1 15/16	11/16	0.142	1 31/32	0.604	1.33	3560	7440
GN104KLLB	SN104K	307	1 1/4	80	38.10	21	22	18.30	19.84	3.9	55.60	17.46	3.96	51.59	0.649	1.43	18300	37100
GN106KLLB	SN106K		1 3/8	3.1496	1 1/2	0.8268	0.8661	23/32	25/32	5/32	2 3/16	11/16	0.156	2 1/32	0.699	1.54	4120	8340
GN107KLLB	SN107K		1 7/16												0.731	1.61		
GN108KLLB	SN108K	308	1 1/2	90	41.28	23	25	19.84	21.43	4.8	63.50	20.64	4.62	57.15	1.153	2.54	26000	49400
				3.5433	1 5/8	0.9055	0.9843	25/32	27/32	3/16	2 1/2	13/16	0.182	2 1/4			5850	11100
GN111KLLB	SN111K	309	1 11/16	100	42.86	25	27	19.84	23.02	4.8	69.85	20.64	4.80	58.74	1.457	3.21	31700	58700
GN112KLLB	SN112K		1 3/4	3.9370	1 11/16	0.9843	1.0630	25/32	29/32	3/16	2 3/4	13/16	0.189	2 5/16	1.657	3.65	7120	13200
GN115KLLB	SN115K	310	1 15/16	110	50.00	27	29	24.60	24.60	4.8	76.20	22.23	5.16	66.68	1.907	4.20	37900	68500
				4.3307	1 31/32	1.0630	1.1417	31/32	31/32	3/16	3	7/8	0.203	2 5/8			8510	15400
GN203KLLB	SN203K	311	2 3/16	120	55.56	29	31	27.80	29.37	4.8	82.55	22.23	5.49	73.02	2.370	5.22	44500	79200
				4.7244	2 3/16	1.1417	1.2205	1 3/32	1 5/32	3/16	3 1/4	7/8	0.216	2 7/8			10000	17800
GN207KLLB	SN207K	312	2 7/16	130	61.91	31	33	30.96	30.96	6.4	88.90	23.80	5.84	79.38	2.841	6.26	52000	90700
				5.1181	2 7/16	1.2205	1.2992	1 7/32	1 7/32	1/4	3 1/2	15/16	0.230	3 1/8			11700	20400
GN211KLLB	SN211K	314	2 11/16	150	68.26	35	37	34.13	34.13	6.4	101.60	26.99	6.73	88.90	4.512	9.94	68100	115700
				5.9055	2 11/16	1.3780	1.4567	1 11/32	1 11/32	1/4	4	1 1/16	0.265	3 1/2			15300	26000
GN215KLLB	SN215K	315	2 15/16	160	74.61	–	39	37.30	37.30	6.4	112.71	31.75	6.48	100.01	5.638	12.42	77000	125900
				6.2992	2 15/16		1.5354	1 15/32	1 15/32	1/4	4 7/16	1 1/4	0.255	3 15/16			17300	28300

NOTE: Bore tolerance: 1/2 in. – 2 3/16 in., nominal to +0.013 mm, +0.0005 in.
2 7/16 in. – 2 15/16 in., nominal to +0.015 mm, +0.0006 in.

SMN A AND B TYPES/MUOA-B INSERTS[1]

- SMN series types A and B have the same ring tolerances and corner radii as equivalent 300-series single-row radial ball bearings.
- Type A has cylindrical outside diameters; type B has spherical outside diameters. The letter B appears on the outer ring only.
- The bearings are not prelubricated.

Suggested shaft tolerances:

5/8 in. – 1 15/16 in., nominal to -0.013 mm, -0.0005 in.;
2 3/16 in. – 3 15/16 in., nominal to -0.025 mm, -0.0010 in.
For larger sizes, contact your Timken engineer.

To order, specify bearing number followed by "+ COL".
Example: SMN102K + COL.

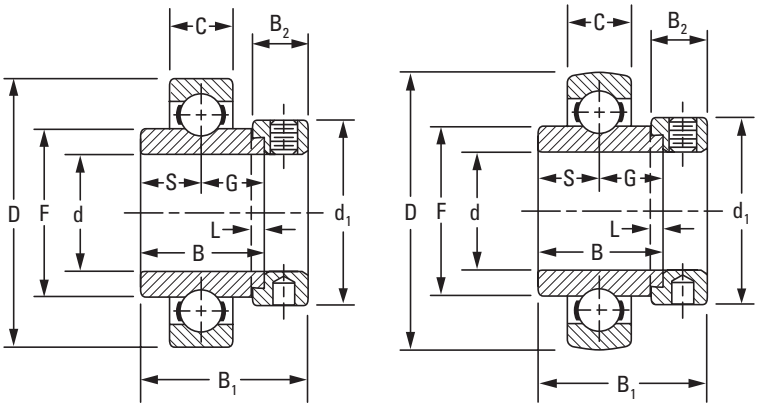

Type A **Type B**

Bearing No. A Type[2]	Bearing No. B Type	Collar No.	Basic Outer-Ring Size	Shaft Dia. d	O.D. D	Ring Widths Inner B	Ring Widths Outer C	S	G	F	L	d_1	B_2	B_1	Brg. and Collar Wt.		Static Load Rating C_o	Extended Dynamic Load Rating C_E
				in.	mm in.	mm in.	mm in.	mm in.	mm in.	mm in.	mm in.	mm in.	mm in.	mm in.	kg	lbs.	N lbs.	N lbs.
SMN010K	SMN010KB	SN010K	303	5/8	**47**	**34.13**	**14**	**17.07**	**17.07**	**25.93**	**4.00**	**34.93**	**15.88**	**46.05**	**0.240**	0.53	**6550**	**15000**
SMN011K	SMN011KB	SN011K		11/16	1.8504	1 11/32	0.5512	43/64	43/64	1.021	5/32	1 3/8	5/8	1 13/16	**0.218**	0.48	1460	3350
SMN012K	SMN012KB	SN012K	304	3/4	**52** 2.0472	**34.93** 1 3/8	**15** 0.5906	**15.90** 5/8	**19.05** 3/4	**29.24** 1.151	**4.00** 5/32	**36.51** 1 7/16	**15.88** 5/8	**46.83** 1 27/32	**0.227**	0.50	**7800** 1760	**17600** 4000
SMN013K	SMN013KB	SN013K	305	13/16	**62** 2.4409	**34.93** 1 3/8	**17** 0.6693	**16.67** 21/32	**18.26** 23/32	**36.50** 1.437	**4.00** 5/32	**42.86** 1 11/16	**15.88** 5/8	**46.83** 1 27/32	**0.445**	0.98	**12200** 2750	**26000** 5850
SMN014K	SMN014KB	SN014K		7/8											**0.431**	0.95		
SMN015K	SMN015KB	SN015K		15/16											**0.413**	0.91		
SMN100K	SMN100KB	SN100K		1											**0.404**	0.86		
SMN101K	SMN101KB	SN101K	306	1 1/16	**72** 2.8346	**36.51** 1 7/16	**19** 0.7480	**17.46** 11/16	**19.05** 3/4	**43.23** 1.702	**4.00** 5/32	**49.21** 1 15/16	**17.46** 11/16	**50.00** 1 31/32	**0.608**	1.34	**15600** 3550	**33500** 7500
SMN102K	SMN102KB	SN102K		1 1/8											**0.585**	1.29		
SMN103K	SMN103KB	SN103K		1 3/16											**0.567**	1.25		
SMN104K	SMN104KB	SN104K	307	1 1/4	**80** 3.1496	**38.10** 1 1/2	**21** 0.8268	**18.26** 23/32	**19.84** 25/32	**48.95** 1.927	**4.00** 5/32	**55.60** 2 3/16	**17.46** 11/16	**51.59** 2 1/32	**0.803**	1.77	**21200** 4750	**40500** 9150
SMN105K	SMN105KB	SN105K		1 15/16											**0.757**	1.67		
SMN106K	SMN106KB	SN106K		1 3/8											**0.726**	1.60		
SMN107K	SMN107KB	SN107K		1 7/16											**0.721**	1.56		
SMN108K	SMN108KB	SN108K	308	1 1/2	**90** 3.5433	**41.28** 1 5/8	**23** 0.9055	**19.84** 25/32	**21.43** 27/32	**55.50** 2.185	**4.80** 3/16	**63.50** 2 1/2	**20.64** 13/16	**57.15** 2 1/4	**1.089**	2.40	**26100** 5850	**49000** 11000
SMN109K	SMN109KB	SN109K		1 9/16											**1.025**	2.26		
SMN110K	SMN110KB	SN110K	309	1 5/8	**100** 3.9370	**42.86** 1 11/16	**25** 0.9843	**19.84** 25/32	**23.02** 29/32	**62.05** 2.443	**4.80** 3/16	**69.90** 2 3/4	**20.64** 13/16	**58.74** 25/16	**1.433**	3.16	**31600** 7100	**58500** 13200
SMN111K	SMN111KB	SN111K		1 11/16											**1.361**	3.00		
SMN112K	SMN112KB	SN112K		1 3/4											**1.361**	3.00		
SMN113K	SMN113KB	SN113K	310	1 13/16	**110** 4.3307	**49.21** 1 15/16	**27** 1.0630	**24.61** 31/32	**24.61** 31/32	**68.78** 2.708	**4.80** 3/16	**76.20** 3	**22.20** 7/8	**66.68** 2 5/8	**1.896**	4.18	**37900** 8500	**68000** 15300
SMN114K	SMN114KB	SN114K		1 7/8											**1.805**	3.98		
SMN115K	SMN115KB	SN115K		1 15/16											**1.737**	3.83		

[1]See page A-159.
[2]Order as MUOA assembly suggested.
[3]For applications where thrust load exceeds 60 percent of radial load, consult your Timken engineer.
NOTE: Bore tolerance: 5/8 in. – 2 3/16 in., nominal to +0.013 mm, +0.0005 in.
3 1/4 in. – 4 3/16 in., nominal to +0.018 mm, +0.0007 in.
4 7/16 in. – 4 15/16 in., nominal to +0.020 mm, +0.0008 in.

Continued on next page.

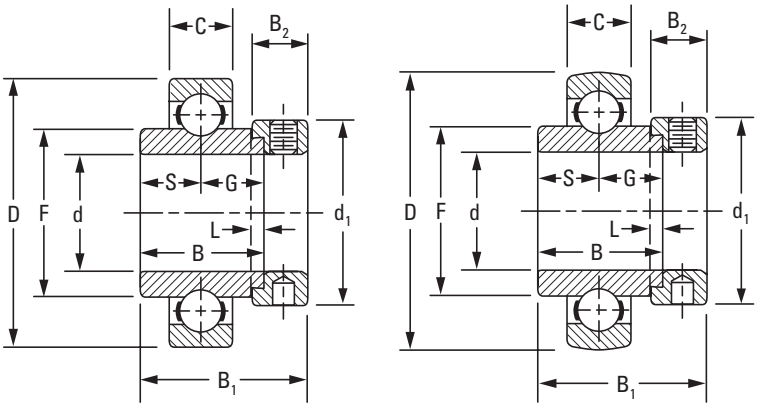

Continued from previous page.

Bearing No. A Type[2]	Bearing No. B Type	Collar No.	Basic Outer-Ring Size	Shaft Dia. d	O.D. D	Ring Widths Inner B	Ring Widths Outer C	S	G	F	L	d_1	B_2	B_1	Brg. and Collar Wt. kg	Brg. and Collar Wt. lbs.	Static Load Rating C_o	Extended Dynamic Load Rating C_E
				in.	mm in.	mm in.	mm in.	mm in.	mm in.	mm in.	mm in.	mm in.	mm in.	mm in.			N lbs.	N lbs.
SMN200K	SMN200KB	SN200K	311	2	120 4.7244	55.56 2 3/16	29 1.1417	27.78 1 3/32	27.78 1 3/32	75.01 2.953	4.80 3/16	82.55 3 1/4	22.20 7/8	73.03 2 7/8	2.413	5.32	43600 9800	80000 18000
SMN201K	SMN201KB	SN201K		2 1/16											2.395	5.28		
SMN202K	SMN202KB	SN202K		2 1/8											2.331	5.14		
SMN203K	SMN203KB	SN203K		2 3/16											2.209	4.87		
SMN204K	SMN204KB	SN204K	312W	2 1/4	130 5.1181	61.91 2 7/16	31 1.2205	31.00 1 7/32	31.00 1 7/32	81.53 3.210	6.40 1/4	88.90 3 1/2	23.81 15/16	79.38 3 1/8	3.084	6.80	51480 11700	89800 20400
SMN205K	SMN205KB	SN205K		2 5/16											3.012	6.64		
SMN206K	SMN206KB	SN206K		2 3/8											2.908	6.41		
SMN207K	SMN207KB	SN207K		2 7/16											2.812	6.20		
SMN211K	SMN211KB	SO211K	314	2 11/16	150 5.9055	2.69 2 11/16	35 1.3780	34.13 1 11/32	34.13 1 11/32	94.78 3.731	6.40 1/4	101.60 4	26.99 1 1/16	92.08 3 5/8	4.205	9.27	66800 15000	116000 26000
SMN215K	SMN215KB	SN215K	315	2 15/16	160 6.2992	74.61 2 15/16	37 1.4567	37.31 1 15/32	37.31 1 15/32	100.38 3.952	6.40 1/4	112.71 4 7/16	31.75 1 1/4	100.01 3 15/16	5.856	12.91	75700 17000	125000 28500
SMN303K	SMN303KB	SN303K	316	3 3/16	170 6.6929	80.96 3 3/16	39 1.5354	40.48 1 19/32	40.48 1 19/32	106.91 4.209	6.40 1/4	119.06 4 11/16	31.75 1 1/4	106.36 4 3/16	6.704	14.78	86000 19300	137000 30500
SMN307K	SMN307KB	SN307K	318	3 7/16	190 7.4803	87.31 3 7/16	43 1.6929	43.66 1 23/32	43.66 123/32	120.12 4.729	7.94 5/16	133.35 5 1/4	36.51 1 7/16	115.89 4 9/16	9.984	22.01	106900 24000	156000 35500
SM0311W-BR[3]	SM0311WB-BR[3]	SO311K	319	3 11/16	200 7.8740	93.66 3 11/16	45 1.7717	38.89 1 17/32	54.77 2 5/32	126.67 4.987	7.94 5/16	139.70 5 1/2	36.51 1 7/16	122.24 4 13/16	11.090	24.45	173700 39000	224000 50000
SMN315K	SMN315KB	SN315K	320	3 15/16	215 8.4646	100.01 3 15/16	47 1.8504	50.00 1 31/32	50.00 131/32	134.77 5.306	7.94 5/16	146.05 5 3/4	36.51 1 7/16	128.59 5 1/16	13.068	28.81	140300 31500	193000 43000
SMN403W-BR[3]	SMN403WB-BR	SN403K	321	4 3/16	225 8.8583	104.78 4 1/8	49 1.9291	48.42 1 29/32	56.36 2 7/32	141.22 5.560	7.94 5/16	157.16 6 3/16	42.86 1 11/16	139.70 5 1/2	15.508	34.19	202700 45500	250000 56000
SMN407W-BR[3]	SMN407WB-BR[3]	SN407K	322	4 7/16	240 9.4488	106.36 4 3/16	50 1.9685	49.21 1 15/16	57.15 2 1/4	142.75 5.920	7.94 5/16	165.10 6 1/2	42.86 1 11/16	141.29 5 9/16	19.051	42.00	245000 55000	285100 64000
SMN415W-BR[3]	SMN415WB-BR[3]	SN415K	326	4 15/16	280 11.0236	106.36 4 3/16	59 2.3228	53.98 2 1/8	61.91 2 7/16	176.56 6.951	7.94 5/16	206.38 8 1/8	42.86 1 11/16	150.81 5 15/16	29.660	65.39	327400 73500	347400 78000

[1]See page A-159.
[2]Order as MUOA assembly suggested.
[3]For applications where thrust load exceeds 60 percent of radial load, consult your Timken engineer.
NOTE: Bore tolerance: 5/8 in. – 2 3/16 in., nominal to +0.013 mm, +0.0005 in.
3 1/4 in. – 4 3/16 in., nominal to +0.018 mm, +0.0007 in.
4 7/16 in. – 4 15/16 in., nominal to +0.020 mm, +0.0008 in.

SMN-S SERIES

- The SMN-S heavy-series construction permits its inner assembly to swivel in the outer aligning ring.
- Unrestricted self-alignment is achieved, allowing the inner ring to become square and true with the shaft and assembly.
- The external S-ring is uniquely ground and closely matched to its respective outer-bearing ring so that the S-ring of one bearing will not fit the outer ring of another bearing.
- This bearing has the basic 300-series load capacities.
- The bearings are not prelubricated.

Suggested shaft tolerances:

1 3/16 in. – 1 15/16 in., nominal to -0.013 mm, -0.0005 in.;
2 in. – 3 15/16 in., nominal to -0.025 mm, -0.0010 in.
Greater than 3 15/16 in., consult your Timken engineer.

To order, specify bearing number followed by "+ COL".
Example: SMN103KS + COL.

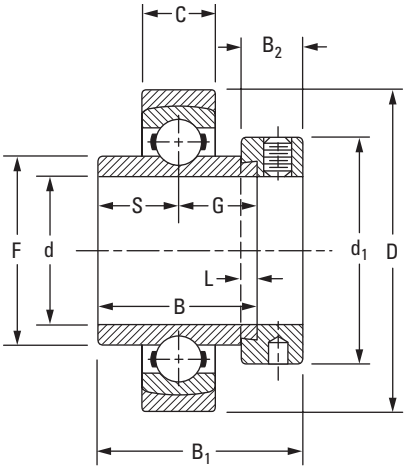

Bearing No.	Collar No.	Basic Outer-Ring Size	Shaft Dia. d	O.D. D	Ring Widths Inner B	Ring Widths Outer C	S	G	F	L	d_1	B_2	B_1	Brg. and Collar Wt.		Static Load Rating C_o	Extended Dynamic Load Rating C_E
			in.	mm in.	mm in.	mm in.	mm in.	mm in.	mm in.	mm in.	mm in.	mm in.	mm in.	kg	lbs.	N lbs.	N lbs.
SMN103KS	SN103K	306	1 3/16	80 3.1496	36.51 1 7/16	19 0.7480	17.50 11/16	19.10 3/4	43.23 1.702	4.0 5/32	49.20 1 15/16	17.50 11/16	50.00 1 31/32	0.654	1.44	15600 3550	33500 7550
SMN107KS	SN107K	307	1 7/16	88 3.4646	38.10 1 1/2	21 0.8268	18.30 23/32	19.80 25/32	48.95 1.927	4.0 5/32	55.60 2 3/16	17.50 11/16	51.60 2 1/32	0.849	1.87	21200 4750	40500 9150
SMN108KS	SN108KT	308	1 1/2	100 3.9370	41.28 1 5/8	23 0.9055	19.80 25/32	21.40 27/32	55.50 2.185	4.8 3/16	63.50 2 1/2	20.60 13/16	57.20 2 1/4	1.344	2.96	26100 5850	49000 11000
SMN111KS	SN111K	309	1 11/16	110 4.3307	42.86 1 11/16	25 0.9843	19.80 25/32	23.00 29/32	62.05 2.443	4.8 3/16	69.90 2 3/4	20.60 13/16	58.70 2 5/16	1.693	3.73	31600 7100	58500 13200
SMN115KS	SN115K	310	1 15/16	120 4.7244	49.21 1 15/16	27 1.0630	24.60 31/32	24.60 31/32	68.78 2.708	4.8 3/16	76.20 3	22.20 7/8	66.70 2 5/8	2.147	4.73	37900 8500	68000 15300
SMN203KS	SN203K	311	2 3/16	130 5.1181	55.56 2 3/16	29 1.1417	27.80 1 3/32	27.80 1 3/32	75.01 2.953	4.8 3/16	82.60 3 1/4	22.20 7/8	73.00 2 7/8	2.769	6.10	43600 9800	80000 18000
SMN207KS	SN207K	312	2 7/16	145 5.7087	61.91 2 7/16	31 1.2205	31.00 1 7/32	31.00 1 7/32	81.53 3.210	6.4 1/4	88.90 3 1/2	23.80 15/16	79.40 3 1/8	3.405	7.50	51700 11600	90000 20400
SMN211KS	SO211K	314	2 11/16	165 6.4961	68.26 2 11/16	35 1.3780	34.10 1 11/32	34.10 1 11/32	94.70 3.731	6.4 1/4	101.60 4	27.00 1 1/16	92.10 3 5/8	5.185	11.42	66800 15000	116000 26000
SMN215KS	SN215K	315	2 15/16	175 6.8898	74.61 2 15/16	37 1.4567	37.30 1 15/32	37.30 1 15/32	100.38 3.952	6.4 1/4	112.70 4 7/16	31.80 1 1/4	100.00 3 15/16	6.456	14.22	75700 17000	125000 28500
SMN303KS	SN303K	316	3 3/16	190 7.4803	80.96 3 3/16	39 1.5354	40.50 1 19/32	40.50 1 19/32	106.91 4.209	6.4 1/4	119.10 4 11/16	31.80 1 1/4	106.40 4 3/16	8.040	17.71	86000 19300	137000 30500
SMN307KS	SN307K	318	3 7/16	210 8.2677	87.31 3 7/16	43 1.6929	43.70 1 23/32	43.70 1 23/32	120.12 4.729	7.9 5/16	133.40 5 1/4	36.50 1 7/16	115.90 4 9/16	1.790	25.97	106900 24000	156000 35500
SMO311WS-BR	SO311K	319	3 11/16	220 8.6608	93.66 3 11/16	45 1.7680	38.89 1 17/32	54.77 2 5/32	126.53 4.982	7.94 5/16	139.70 5 1/2	36.51 1 7/16	122.24 4 13/16	16.300	33.00	166000 37500	224000 50000
SMN315KS	SN315K	320	3 15/16	235 9.2520	100.01 3 15/16	47 1.8504	50.00 1 31/32	50.00 1 31/32	134.77 5.306	7.9 5/16	146.00 5 3/4	36.50 1 7/16	128.60 5 1/16	15.822	34.85	140300 31500	193000 43000
SMN407WS-BR[1]	SN407K	322	4 7/16	265 10.4331	106.36 4 3/16	50 1.9685	49.20 1 15/16	57.20 2 1/4	150.37 5.920	7.9 5/16	168.30 6 1/2	42.90 1 11/16	141.30 5 9/16	21.465	47.28	245000 55000	280000 63000
SMN415WS-BR[1]	SN415K	326	4 15/16	300 11.8110	115.89 4 9/16	59 2.3228	54.00 2 1/8	61.90 2 7/16	176.56 6.951	7.9 5/16	206.40 8 1/8	42.90 1 11/16	150.80 5 15/16	33.773	74.39	327400 73500	345000 78000

[1]For applications where thrust load exceeds 60 percent of radial load, consult your Timken engineer.
NOTE: Bore tolerance: 15/16 in. – 2 3/16 in., nominal to +0.013 mm, +0.0005 in.
2 1/4 in. – 3 3/16 in., nominal to +0.015 mm, +0.0006 in.
3 1/4 in. – 4 3/16 in., nominal to +0.018 mm, +0.0007 in.
4 7/16 in. – 4 15/16 in., nominal to +0.020 mm, +0.0008 in.

BALL BEARING HOUSED UNITS

Timken® housed units are available in a wide variety of types and sizes to accommodate a complete range of operating conditions.

- **Sizes:** 12.7 mm – 125.4 mm (1/2 in. – 4 15/16 in.). Size range is dependent upon duty series.
- **Industries and applications:** Agriculture, food processing, conveyors, fans and blowers.
- **Features:** Most popular design features cast-iron housing. Other material options include malleable iron, polymer, pressed-steel or rubber.
- **Benefits:** Combines bearing, housing, seal and locking system into one device for easy installation. Operates even when the shaft is not perfectly aligned with the mounting surface.

NOMENCLATURE

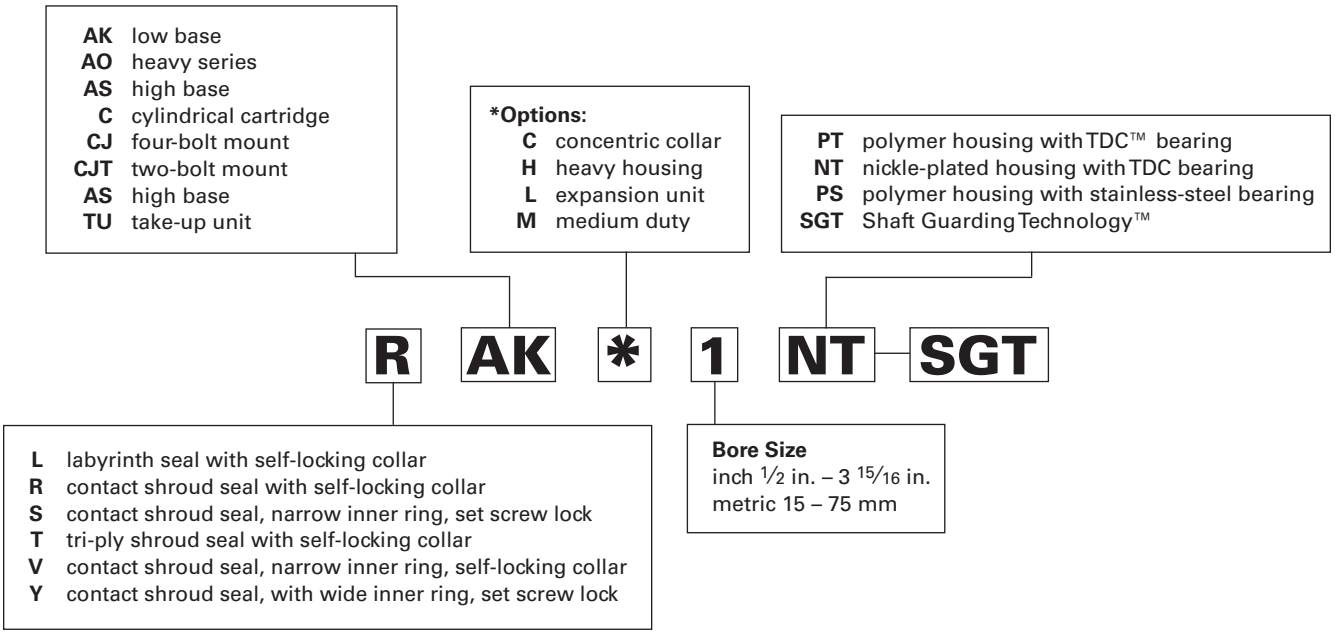

Fig. A-19. Wide-inner-ring ball bearing housed unit nomenclature.

INTRODUCTION

Ball bearing housed units are available in a wide variety of types and sizes to accommodate a complete range of operating conditions.

These units generally have cast-iron housings and mount on straight shafts with a slip fit. The self-locking collar and the set screw inner-bearing designs make mounting easier. Many of the set screw units include Shaft Guarding Technology™ (see page A-31). Bolt holes in housings take standard bolts to attach units to machinery frames. Several series are available with the concentric locking collar. Most units have a self-aligning feature.

Units incorporating prelubricated wide-inner-ring ball bearings may be furnished without grease fittings.

Several basic types of housed units are available:

- Pillow blocks also known as housed units.
- Flanged cartridges.
- Flangette units.
- Cylindrical cartridges.
- Take-up units.

The choice is determined by application and mounting requirements. Within the basic type selected, variations are available for specific load factors, shaft sizes, mounting surface dimensions, base-to-shaft centerline heights and lubrication requirements.

PILLOW BLOCKS

Pillow blocks, the most commonly used type of mounted units, provide shaft support where the mounting surface is parallel to the shaft axis (fig. A-20). The bolt holes are usually slotted for easy adjustment during mounting.

Pillow blocks come in a variety of configurations.

- Narrow series (V and S) are lightweight, yet structurally designed to support bearing load.
- Premium width series (R and Y) are three times stronger for rougher environments. They're available in two styles that fit typical applications.
- Pressed steel and rubber pillow blocks are available for light-duty applications.

Fig. A-20. Pillow block.

FLANGED CARTRIDGES

Flanged cartridges are used where a shaft passes through the machine frame at a right angle (fig. A-21). A four-bolt mounting is the most common; however, where the mounting area is restricted, three- and two-bolt versions are available. A piloted flanged cartridge provides additional mounting accuracy and support.

Fig. A-21. Flanged cartridge.

Flanged cartridges are supplied in both standard and heavy-duty series. Iron- and rubber-flanged cartridges also are available.

A complete line of flangette units or pressed-steel flanged cartridges provides an economical solution for light-duty applications. Two-, three- and four-bolt mountings are available along with a relubricatable version.

CYLINDRICAL CARTRIDGES

Cylindrical cartridges, like flanged cartridges, provide shaft support where the shaft axis is perpendicular to and passing through a machined housing that is generally very thick (fig. A-22). The outside diameter of the cylindrical cartridges permits mounting with a press fit into a straight, through-bored housing.

Cylindrical cartridges have a machined spherical bearing seat to provide initial shaft alignment in standard-duty applications. Synthetic, conductive rubber cylindrical cartridges are available for applications where low-cost, light-duty, low-noise operation is essential.

Fig. A-22. Cylindrical cartridge.

Fig. 23. Take-up unit.

TAKE-UP UNITS

Take-up units are used where shaft adjustment and belt-tightening devices are required, such as conveyor applications (fig. A-23). Frames for take-up units provide for either side or top mounting.

Take-up units are available in cast-iron for standard-duty applications and pressed steel for economical, light-duty applications.

FEATURES AND BENEFITS OF TIMKEN® BALL BEARING HOUSED UNITS

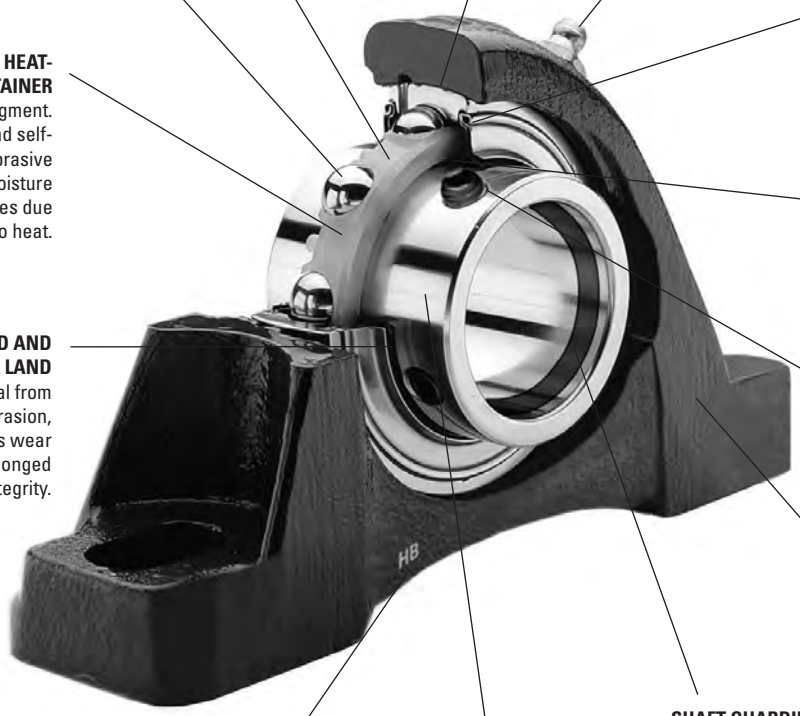

DOUBLE-FILTERED POLYUREA GREASE
Improves lubrication cleanliness for excellent performance at higher speeds.

HOUSING TOLERANCES
Provides better grease purge throughout the bearing due to reduced risk of grease purge between the bearing and housing.

GRADE-10 BALLS
Quieter and smoother-running bearings due to higher-specification steel and improved roundness.

GREASE FITTING OFFSET
Minimizes risk of accidental and side impact, and maintains accessibility for single-point lubricators.

SEAL CURL
Secures mechanical attachment of seal, resisting "pop-out" during relubrication and inhibiting spinning of the seal.

6/6 NYLON HEAT-STABILIZED RETAINER
Tolerates some misaligment. Non-corrosive and self-lubricating. Resistant to abrasive wear, most solvents, moisture trapping and size changes due to heat.

SEAL MATERIAL
Buna-N-Rubber using cotton fiber, embedded to wick oil, enhances lubrication and improves sealing integrity.

HARDENED AND GROUND SEAL LAND
Protects seal from inner-ring abrasion, resulting in less wear and prolonged seal integrity.

NYLON-PATCH SET SCREW
Increases bearing life by reducing the potential of the set screw backing out due to vibration.

POWDER-COAT FINISH
Reduces chipping, scratching and subsequent exposure of metals, preventing corrosion.

SHAFT GUARDING TECHNOLOGY™
Helps protect shaft and prolong life with stainless-steel band.

SUPERFINISHED RACEWAYS
Reduces friction with even surfaces, leading to cooler, quieter running and longer life.

BASE-TO-CENTER LINE HEIGHT INDICATOR
Provides a line height indicator to help you select the right base (low or high) when replacing the housed unit.

NOTE

Failure to follow the mounting/dismounting instructions of your equipment supplier can cause damage to the shaft, leading to premature failure of the equipment.

www.timken.com/warning/WIR

TIMKEN SELF-LOCKING COLLAR INSTALLATION

Most Timken housed units come equipped with the self-locking collar to facilitate the mounting of wide-inner-ring ball bearings. This self-locking collar eliminates the need for locknuts, washers, shoulders, sleeves and adapters.

The locking collar has a counterbored recess made purposely eccentric to the bore. The collar recess and the end of the bearing inner ring with which it engages are both machined so that they act as mating cams when on the shaft.

When the collar is engaged to the inner ring, it grips the shaft tightly with a positive binding action that increases with use. No adjustments of any kind are necessary.

CONCENTRIC COLLAR

For simplified installation of Timken housed units equipped with concentric-collar bearings, the collar is normally assembled to the wide inner ring for shipment. Slip the complete unit on the shaft following steps 1 and 2 (table A-22) described for the self-locking collar procedure, and tighten both set screws.

TIMKEN SET SCREW LOCKING BEARING

Steps 1 and 2 (table A-22) can be repeated from the self-locking collar installation above. To lock the set screw bearing, simply tighten each inner ring set screw to the suggested torque listed by shaft size. See table A-21.

TABLE A-21. SET SCREW LOCKING GUIDE.

Shaft Size		SUGGESTED
in.	**mm**	Torque in. - lbs.
1/2 – 11/16	**17**	35
3/4 – 1	**20 – 25**	80
1 1/16 – 1 3/4	**30 – 45**	155
1 13/16 – 2 3/16	**50 – 55**	275

It may be necessary to rotate the shaft to provide an easy access of the set screw wrench to the set screws. To disassemble, loosen the set screws.

TABLE A-22. SELF-LOCKING COLLAR INSTALLATION

1. Slip the shaft through the pillow block or other Timken® housed unit incorporating the wide-inner-ring ball bearing. Be certain the bearing is aligned in position along the shaft to eliminate any possibility of cramping loads.

2. Fasten the unit securely to the base using the proper bolt size.

3. Place the self-locking collar on the shaft with its cam adjacent to the cam on the end of the bearing's inner ring. The eccentric recessed cam will slide over and engage the corresponding cam on the bearing inner ring. Turn the collar in the direction of shaft rotation.

4. Using a lightweight hammer and a drift pin inserted in the drift-pin hole, tap lightly in the direction of shaft rotation to positively engage the collar. The wide inner ring is now locked to the shaft.

5. As a final step, fully tighten the set screw. It exerts a wedging action to hold the collar always in the engaged position, even under shock load. This design will operate effectively after the cams are tightly locked and in most cases, with no set screws at all.

CAST-IRON HOUSED UNITS

RAK, TAK, LAK INDUSTRIAL SERIES

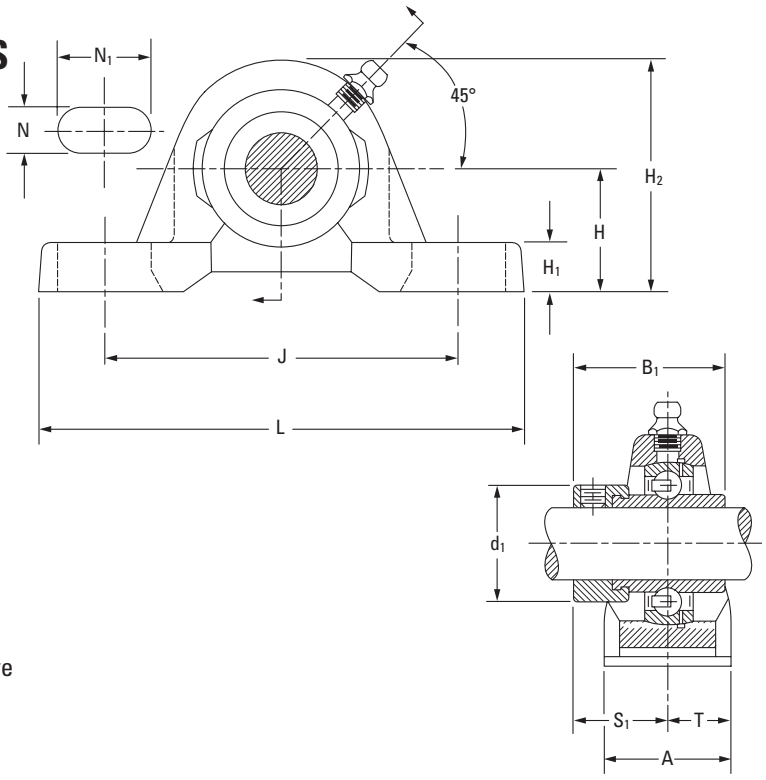

RAK, TAK and LAK pillow blocks are suggested for industrial applications where normal loads are encountered.

- Heavier than our standard block with solid, flat feet for increased strength.
- Compact, one-piece housing can be mounted in any position.
- Pillow blocks self-align at mounting with the spherical outside diameter of the bearing fitting into the corresponding spherical housing seat.
- Prelubricated and ready for immediate installation.
- Grease fitting for relubrication.
- Self-locking collars supplied with all units.
- RAK pillow block is equipped with G-KRRB (R-seal) wide-inner-ring ball bearings, the TAK with G-KPPB (tri-ply seal) wide-inner-ring ball bearings and the LAK with the G-KLLB (Mechani-seal) wide-inner-ring ball bearings.
- Contact a Timken engineer to discuss highly corrosive applications (food processing, chemical exposure) where Timken thin-dense chrome-coated bearings can be utilized.

Suggested shaft tolerances:

½ in. – 1 15/16 in., nominal to -0.013 mm, -0.0005 in.;
2 in. – 2 15/16 in., nominal to -0.025 mm, -0.0010 in.

To order, specify UNIT and SHAFT DIAMETER.

Example: RAK 1 7/16 in.

BEARING DATA

Unit	Bearing No.	Dimensions and Load Ratings
RAK	G-KRRB	Page A-34
TAK	G-KPPB	Page A-39
LAK	G-KLLB	Page A-37

Unit	Shaft Dia.	H	H_2	B_1	J	L	A	H_1	N	N_1	d_1	S_1	T	Bolt Size	Bearing No.[1]		Collar No.	Housing No.	Unit Wt.
	in. **mm**	**mm** in.	**mm** in.	**mm** in.	**mm** in.	**mm** in.	**mm** in.	**mm** in.	**mm** in.	**mm** in.	**mm** in.	**mm** in.	**mm** in.	**mm** in.	RAK	(TAK/LAK)		New (Old)	**kg** lbs.
RAK, LAK	½														G1008KRRB	(KLLB)	S1008K		
RAK, LAK	⅝	**26.99**	**53.20**	**37.3**	**92.1**	**123.8**	**30.2**	**8.7**	**11.1**	**22.2**	**28.6**	**23.4**	**15.1**	**10**	G1010KRRB	(KLLB)	S1010K	T-40238	**0.454**
RAK	11/16	1 1/16	2 3/32	1 15/32	3 5/8	4 7/8	1 3/16	11/32	7/16	7/8	1 1/8	59/64	19/32	3/8	G1011KRRB		S1011K	(T-30595)	1.00
RAK	**17**														GE17KRRB		SE17K		
RAK, LAK	¾	**31.75**	**64.30**	**43.7**	**96.0**	**127.0**	**33.3**	**13.5**	**11.1**	**20.2**	**33.3**	**26.6**	**16.7**	**10**	G1012KRRB	(KLLB)	S1012K	M96830	**0.730**
RAK	**20**	1 1/4	2 17/32	1 23/32	3 25/32	5	1 5/16	17/32	7/16	51/64	1 5/16	1 3/64	21/32	3/8	GE20KRRB		SE20K		1.61
RAK, TAK	⅞														G1014KRRB	(KPPB3)	S1014K		
RAK, TAK, LAK	15/16	**33.34**	**69.80**	**44.4**	**104.8**	**139.7**	**37.3**	**11.9**	**11.1**	**20.6**	**38.1**	**27.0**	**18.7**	**10**	G1015KRRB	(KPPB3/KLLB)	S1015K	M96833	**0.950**
RAK, TAK, LAK	1	1 5/16	2 3/4	1 3/4	4 1/8	5 1/2	1 15/32	15/32	7/16	13/16	1 1/2	1 1/16	47/64	3/8	G1100KRRB	(KPPB3/KLLB)	S1100K		2.10
RAK, TAK	**25**														GE25KRRB	(KPPB3)	SE25K		
RAK, TAK	1 1/16														G1101KRRB	(KPPB3)	S1101K		
RAK, TAK, LAK	1 1/8	**36.68**	**81.70**	**48.4**	**117.5**	**157.2**	**42.9**	**13.5**	**14.3**	**23.8**	**44.1**	**30.1**	**21.4**	**12**	G1102KRRB	(KPPB3/KLLB)	S1102K	M96836	**1.420**
RAK, TAK, LAK	1 3/16	1 9/16	3 7/32	1 29/32	4 5/8	6 3/16	1 11/16	17/32	9/16	15/16	1 47/64	1 3/16	27/32	½	G1103KRRB	(KPPB3/KLLB)	S1103K		3.14
RAK, TAK	**30**														GE30KRRB	(KPPB3)	SE30K		
RAK, TAK, LAK	1 1/4														G1104KRRB	(KPPB2/KLLB)	S1104K		
RAK, TAK	1 5/16														G1105KRRB	(KPPB2)	S1105K		
RAK, TAK	1 3/8	**46.04**	**93.70**	**51.2**	**130.2**	**166.7**	**46.8**	**16.7**	**14.3**	**24.6**	**53.4**	**32.5**	**23.4**	**12**	G1106KRRB	(KPPB2)	S1106K	M96839	**1.890**
RAK, TAK, LAK	1 7/16	1 13/16	3 11/16	2 1/64	5 1/8	6 9/16	1 27/32	21/32	9/16	31/32	2 1/8	1 9/32	59/64	½	G1107KRRB	(KPPB2/KLLB)	S1107K		4.18
RAK, TAK	**35**														GE35KRRB	(KPPB2)	SE35K		

[1]Bearing number for RAK is G-KRRB. TAK uses G-KPPB. LAK uses G-KLLB.
NOTE: All units have ⅛ pipe-thread grease fitting except ½ – 11/16 and ¾ units, which have ¼-28 fitting.

Continued on next page.

RAK, TAK, LAK INDUSTRIAL SERIES *– continued*

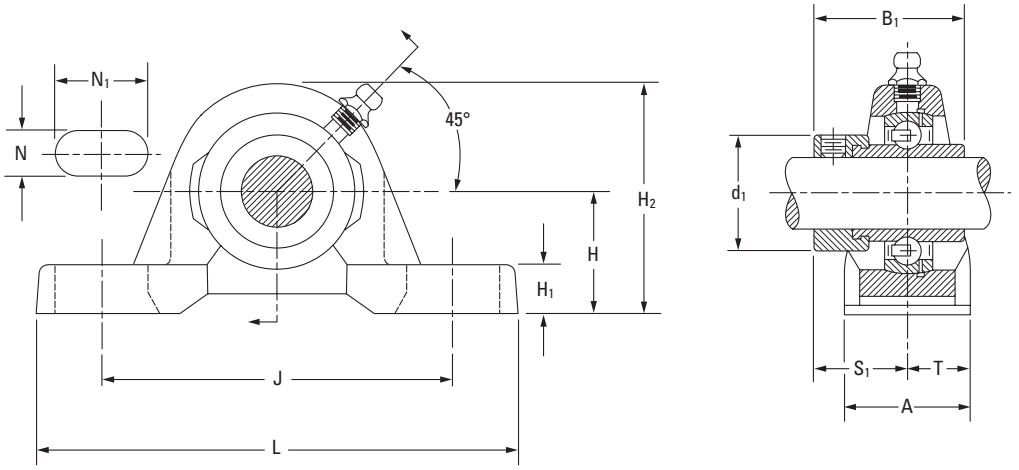

Continued from previous page.

Unit	Shaft Dia.	H	H_2	B_1	J	L	A	H_1	N	N_1	d_1	S_1	T	Bolt Size	Bearing No.[1]		Collar No.	Housing No.	Unit Wt.
	in. **mm**	**mm** in.	**mm** in.	**mm** in.	**mm** in.	**mm** in.	**mm** in.	**mm** in.	**mm** in.	**mm** in.	**mm** in.	**mm** in.	**mm** in.	**mm** in.	RAK	(TAK/LAK)		New (Old)	**kg** lbs.
RAK, TAK, LAK	1 1/2														G1108KRRB	(KPPB3/KLLB)	S1108KT		
RAK, TAK	1 9/16	**49.21**	**101.60**	**56.4**	**136.5**	**179.4**	**51.6**	**19.1**	**14.3**	**26.2**	**60.3**	**34.9**	**25.8**	**12**	G1109KRRB	(KPPB3)	S1109KT	M96842	**2.490**
RAK, TAK	**40**	1 15/16	4	2 7/32	5 3/8	7 1/16	2 1/32	3/4	9/16	1 1/32	2 3/8	1 3/8	1 1/64	1/2	GE40KRRB	(KPPB3)	SE40K		5.50
RAK, TAK	1 5/8														G1110KRRB	(KPPB4)	S1110K		
RAK, TAK, LAK	1 11/16	**52.39**	**104.80**	**56.4**	**98.4**	**191.3**	**52.4**	**17.5**	**14.3**	**28.6**	**63.5**	**34.9**	**26.2**	**12**	G1111KRRB	(KPPB4/KLLB)	S1111K	M96844	**3.200**
RAK, TAK, LAK	1 3/4	2 1/16	4 1/8	2 7/32	5 7/8	7 17/32	2 1/16	11/16	9/16	1 1/8	2 1/2	1 3/8	1 1/32	1/2	G1112KRRB	(KPPB4/KLLB)	S1112K		7.06
RAK, TAK	**45**														GE45KRRB	(KPPB4)	SE45K		
RAK, TAK	1 7/8														G1114KRRB	(KPPB3)	S1114K		
RAK, TAK, LAK	1 15/16	**55.56**	**112.70**	**62.7 2**	**158.0**	**200.0**	**57.9**	**17.7**	**18.3**	**25.4**	**69.9**	**38.1**	**29.0**	**16**	G1115KRRB	(KPPB3/KLLB)	S1115K	M96847	**4.010**
RAK, TAK	**50**	2 3/16	4 7/16	15/32	6 7/32	7 7/8	2 9/32	11/16	23/32	1	2 3/4	1 1/2	1 9/64	5/8	GE50KRRB	(KPPB3)	SE50K		8.86
RAK, TAK	2														G1200KRRB	(KPPB4)	S1200K		
RAK, TAK	2 1/8	**61.91**	**126.20**	**71.4**	**176.2**	**222.3**	**60.3**	**19.0**	**18.3**	**29.4**	**76.2**	**43.7**	**30.2**	**16**	G1202KRRB	(KPPB4)	S1202K	T-40246	**3.901**
RAK, TAK, LAK	2 3/16	2 7/16	4 31/32	2 13/16	6 15/16	8 3/4	2 3/8	3/4	23/32	1 5/32	3	1 23/32	1 3/16	5/8	G1203KRRB	(KPPB4/KLLB)	S1203K	(M96850)	8.60
RAK, TAK	**55**														GE55KRRB	(KPPB4)	SE55K		
RAK	2 1/4														G1204KRRB		S1204K		
RAK	2 3/8	**68.26**	**137.30**	**77.8**	**188.1**	**239.7**	**60.3**	**22.2**	**18.3**	**29.4**	**84.1**	**46.8**	**30.2**	**16**	G1206KRRB		S1206K	T-40247	**5.511**
RAK, LAK	2 7/16	2 11/16	5 13/32	3 1/16	7 13/32	9 7/16	2 3/8	7/8	23/32	1 5/32	3 5/16	1 27/32	1 3/16	5/8	G1207KRRB	(KLLB)	S1207K	(M99647)	12.15
RAK	**60**														GE60KRRB		SE60K		
RAK	2 11/16	**76.20**	**154.00**	**85.7**	**203.2**	**266.7**	**73.0**	**33.3**	**20.6**	**34.9**	**96.8**	**45.2**	**36.5**	**20**	G1211KRRB		S1211KT	T-22503	**7.920**
RAK	**70**	3	6 1/6	3 3/8	8	10 1/2	2 7/8	1 5/16	13/16	1 3/8	3 13/16	1 25/32	1 7/16	3/4	GE70KRRB		SE70K		17.46
RAK	2 15/16	**84.14**	**163.50**	**92.1**	**241.3**	**304.8**	**82.6**	**38.1**	**22.2**	**31.8**	**101.6**	**54.8**	**41.3**	**20**	G1215KRRB		S1215K	T-20134	**9.026**
RAK	**75**	3 5/16	6 7/16	3 5/8	9 1/2	12	3 1/4	1 1/2	7/8	1 1/4	4	2 5/32	1 5/8	3/4	GE75KRRB		SE75K		19.90

[1]Bearing number for RAK is G-KRRB. TAK uses G-KPPB. LAK uses G-KLLB.
NOTE: All units have 1/8 pipe-thread grease fitting except 1/2 – 11/16 and 3/4 units, which have 1/4-28 fitting.

YAK INDUSTRIAL-SERIES SET SCREW UNITS

- Incorporates Shaft Guarding Technology, which reduces replacement time, provides shaft protection and prolongs the life of the shaft.
- Heavier than our standard block with solid, flat feet for increased strength.
- Timken series low-base set screw pillow blocks feature the GY-KRRB bearing.
- Well-suited for industrial applications with normal loads due to its full-width inner-ring set screw.
- Contact a Timken engineer to discuss highly corrosive applications (food processing, chemical exposure) where Timken thin-dense chrome-coated bearings can be utilized.

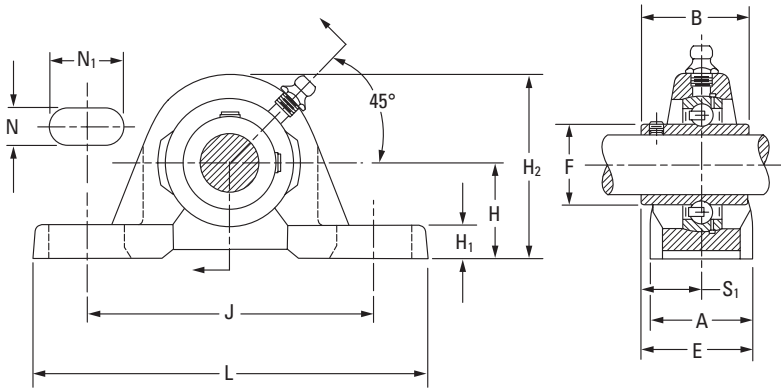

Suggested shaft tolerances:

1/2 in. – 1 15/16 in., nominal to -0.013 mm, -0.0005 in.;

2 in. – 2 15/16 in., nominal to -0.025 mm, -0.0010 in.

To order, specify UNIT and SHAFT DIAMETER.

Example: YAK 1 7/16 in.

BEARING DATA

Unit	Bearing No.	Dimensions and Load Ratings
YAK	GY-KRRB	Page A-44

Unit	Shaft Dia.	H	H_2	B	J	L	A	H_1	N	N_1	F	S_1	E	Bolt Size	Bearing No.	Housing No.	Unit Wt.
	in. **mm**	**mm** in.	**mm** in.	**mm** in.	**mm** in.	**mm** in.	**mm** in.	**mm** in.	**mm** in.	**mm** in.	**mm** in.	**mm** in.	**mm** in.	**mm** in.			**kg** lbs.
YAK YAK YAK	1/2 5/8 **17**	**26.99** 1 1/16	**53.2** 2 3/32	**27.4** 1 5/64	**92.1** 3 5/8	**123.8** 4 7/8	**30.2** 1 3/16	**8.7** 11/32	**11.1** 7/16	**22.2** 7/8	**22.9** 0.900	**15.9** 5/8	**31.0** 1 7/32	**10** 3/8	GY1008KRRB GY1010KRRB GYE17KRRB	T40238	**0.4536** 1.0000
YAK YAK	3/4 SGT **20 SGT**	**31.75** 1 1/4	**64.3** 2 17/32	**31.8** 1 1/4	**96.4** 3 51/64	**127.0** 5	**33.3** 1 5/16	**13.5** 17/32	**11.1** 7/16	**20.2** 51/64	**27.6** 1.085	**19.1** 3/4	**35.7** 1 13/32	**10** 3/8	GY1012KRRB SGT GYE20KRRB SGT	M96830	**0.6775** 1.4937
YAK YAK YAK YAK	7/8 SGT 15/16 SGT 1 SGT **25 SGT**	**33.34** 1 5/16	**70.0** 2 3/4	**34.9** 1 3/8	**104.8** 4 1/8	**139.7** 5 1/2	**37.3** 1 15/32	**11.9** 15/32	**11.1** 7/16	**20.6** 13/16	**33.8** 1.332	**20.6** 13/16	**39.3** 1 35/64	**10** 3/8	GY1014KRRB SGT GY1015KRRB SGT GY1100KRRB SGT GYE25KRRB SGT	M96833	**0.8924** 1.9673
YAK YAK YAK YAK	1 1/8 SGT 1 3/16 SGT 1 1/4S **30 SGT**	**39.69** 1 9/16	**81.8** 3 7/32	**39.3** 1 35/64	**117.5** 4 5/8	**157.2** 6 3/16	**42.9** 1 11/16	**13.5** 17/32	**14.3** 9/16	**23.8** 15/16	**40.3** 1.587	**23.4** 59/64	**44.8** 1 49/64	**12** 1/2	GY1102KRRB SGT GY1103KRRB SGT GY1103KRRB3 SGT GYE30KRRB SGT	M96836	**1.3541** 2.9853
YAK YAK YAK YAK	1 1/4 SGT 1 3/8 SGT 1 7/16 SGT **35 SGT**	**46.04** 1 13/16	**93.7** 3 11/16	**45.2** 1 25/32	**130.2** 5 1/8	**166.7** 6 9/16	**46.8** 1 27/32	**16.7** 21/32	**14.3** 9/16	**24.6** 31/32	**46.8** 1.844	**28.2** 1 7/64	**51.6** 2 1/32	**12** 1/2	GY1104KRRB SGT GY1106KRRB SGT GY1107KRRB SGT GYE35KRRB SGT	M96839	**1.8434** 4.0639
YAK YAK	1 1/2 SGT **40 SGT**	**49.21** 1 15/16	**101.6** 4	**49.2** 1 15/16	**136.5** 5 3/8	**179.4** 7 1/16	**51.6** 2 1/32	**19.1** 3/4	**14.3** 9/16	**26.2** 1 1/32	**52.3** 2.058	**30.2** 1 3/16	**56.0** 2 13/34	**12** 1/2	GY1108KRRB SGT GYE40KRRB SGT	M96842	**2.4763** 5.4592
YAK YAK YAK YAK	1 5/8 SGT 1 11/16 SGT 1 3/4 SGT **45 SGT**	**52.39** 2 1/16	**104.8** 4 1/8	**50.4** 1 63/64	**149.2** 5 7/8	**191.3** 7 17/32	**52.4** 2 1/16	**17.5** 11/16	**14.3** 9/16	**28.6** 1 1/8	**57.9** 2.280	**31.4** 1 15/64	**57.5** 2 17/64	**12** 1/2	GY1110KRRB SGT GY1111KRRB SGT GY1112KRRB SGT GYE45KRRB SGT	M96844	**2.6311** 5.8005
YAK YAK YAK	1 15/16 SGT 2 S **50 SGT**	**55.56** 2 3/16	**112.7** 4 7/16	**51.6** 2 1/32	**158.0** 6 7/32	**200.2** 7 7/8	**57.9** 2 9/32	**17.5** 11/16	**18.3** 23/32	**25.4** 1	**62.8** 2.474	**32.5** 1 9/32	**61.5** 2 27/64	**16** 5/8	GY1115KRRB SGT GY1115KRRB2 SGT GYE50KRRB SGT	M96847	**3.2579** 7.1824
YAK YAK YAK	2 SGT 2 3/16 SGT **55 SGT**	**61.91** 2 7/16	**126.2** 4 31/32	**55.6** 2 3/16	**176.2** 6 15/16	**222.3** 8 3/4	**60.3** 2 3/8	**19.1** 3/4	**18.3** 23/32	**29.4** 1 5/32	**69.8** 2.747	**33.3** 1 5/16	**61.9** 2 7/16	**16** 5/8	GY1200KRRB SGT GY1203KRRB SGT GYE55KRRB SGT	M96850	**3.9009** 8.6000
YAK YAK YAK	2 1/4 SGT 2 7/16 SGT **60 SGT**	**68.26** 2 11/16	**137.3** 5 13/32	**65.1** 2 9/16	**188.1** 7 13/32	**239.7** 9 7/16	**60.3** 2 3/8	**22.2** 7/8	**18.3** 23/32	**29.4** 1 5/32	**76.5** 3.011	**39.7** 1 9/16	**69.9** 2 3/4	**16** 5/8	GY1204KRRB SGT GY1207KRRB SGT GYE60KRRB SGT	M99647	**4.7718** 10.5200
YAK YAK	2 11/16 **70**	**76.20** 3	**154.0** 6 1/16	**69.9** 2 3/4	**203.2** 8	**266.7** 10 1/2	**73.0** 2 7/8	**33.3** 1 5/16	**20.6** 13/16	**34.9** 1 3/8	**86.9** 3.422	**42.9** 1 11/16	**79.4** 3 1/8	**20** 3/4	GY1211KRRB GYE70KRRB	T22503	**7.1259** 15.7100
YAK YAK	2 15/16 **75**	**84.14** 3 5/16	**163.5** 6 7/16	**77.8** 3 1/16	**241.3** 9 1/2	**304.8** 12	**82.6** 3 1/4	**38.1** 1 1/2	**22.2** 7/8	**31.8** 1 1/4	**91.9** 3.619	**44.5** 1 3/4	**85.7** 3 3/8	**20** 3/4	GY1215KRRB GY75KRRB	T20134	**8.5185** 18.7800

NOTE: Shaft diameter with an S = smaller housing.

VAK STANDARD SERIES

- The streamlined and rugged VAK pillow block unit combines an engineered housing and an RA-RR extended inner ring bearing.
- RA-RR bearing employs a positive-contact, land-riding seal and a Timken self-locking collar. Collar ensures positive shaft retention.
- The pillow block can be mounted to operate in any position.
- Bearing housed units are factory-prelubricated, but a grease fitting is provided to allow for relubrication if required.

Suggested shaft tolerances:

1/2 in. – 1 15/16 in., nominal to -0.013 mm, -0.0005 in.;

2 in. – 2 3/16 in., nominal to -0.025 mm, -0.0010 in.

To order, specify UNIT and SHAFT DIAMETER.

Example: VAK 1 7/16 in.

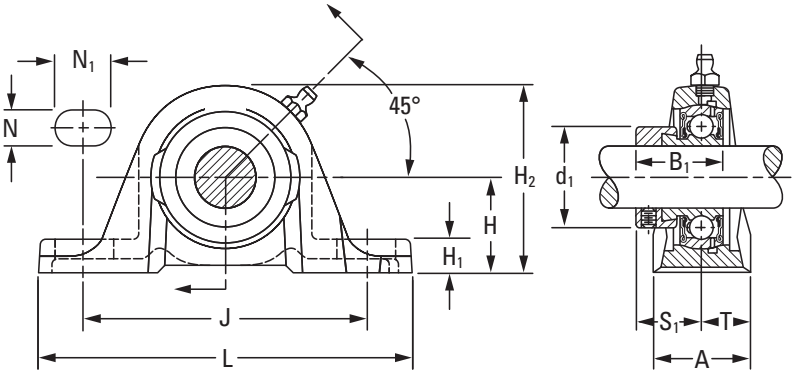

BEARING DATA

Unit	Bearing No.	Dimensions and Load Ratings
VAK	GRA-RRB	Page A-50

Unit	Shaft Dia.	H	H_2	B_1	J	L	A	H_1	N	N_1	d_1	S_1	T	Bolt Size	Bearing No.	Collar No.	Housing No.	Unit Wt.
	in. **mm**	**mm** in.	**mm** in.	**mm** in.	**mm** in.	**mm** in.	**mm** in.	**mm** in.	**mm** in.	**mm** in.	**mm** in.	**mm** in.	**mm** in.	**mm** in.			New (Old)	**kg** lbs.
VAK	1/2	**26.99**	**53.2**	**28.6**	**92.1**	**123.8**	**30.2**	**8.7**	**11.1**	**22.2**	**28.6**	**22.2**	**15.1**	**10**	GRA008RRB	S1008K	T-40238	**0.454**
VAK	5/8	1 1/16	2 3/32	1 1/8	3 5/8	4 7/8	1 3/16	11/32	7/16	7/8	1 1/8	7/8	19/32	3/8	GRA010RRB	S1010K	(T-30595)	1.00
VAK	**17**														GRAE17RRB	SE17K		
VAK	3/4	**31.75**	**62.7**	**31.0**	**96.0**	**127.0**	**31.8**	**11.9**	**11.1**	**19.8**	**33.3**	**23.4**	**15.9**	**10**	GRA012RRB	S1012K	T-40239	**0.563**
VAK	**20**	1 1/4	2 15/32	1 7/32	3 25/32	5	1 1/4	15/32	7/16	25/32	1 5/16	59/64	5/8	3/8	GRAE20RRB	SE20K	(T-30555)	1.24
VAK	7/8														GRA014RRB	S1014K		
VAK	15/16	**33.34**	**68.3**	**31.0**	**104.8**	**139.7**	**35.7**	**11.9**	**11.1**	**20.6**	**38.1**	**23.4**	**17.9**	**10**	GRA015RRB	S1015K	T-30365	**0.758**
VAK	1	1 5/16	2 11/16	1 7/32	4 1/8	5 1/2	1 13/32	15/32	7/16	13/16	1 1/2	59/64	45/64	3/8	GRA100RRB	S1100K		1.67
VAK	**25**														GRAE25RRB	SE25K		
VAK	1 1/8														GRA102RRB	S1102K		
VAK	1 3/16	**39.69**	**80.2**	**35.7**	**117.5**	**157.2**	**39.7**	**13.5**	**14.3**	**23.8**	**44.1**	**27.0**	**19.9**	**12**	GRA103RRB	S1103K	T-40241	**1.235**
VAK	1 1/4 S	1 9/16	3 5/32	1 13/32	4 5/8	6 3/16	1 9/16	17/32	9/16	15/16	1 47/64	1 1/16	25/32	1/2	GRA103RRB2	S1103K3	(T-30300)	2.72
VAK	**30**														GRAE30RRB	SE30K		
VAK	1 1/4														GRA104RRB	S1104K		
VAK	1 3/8	**46.04**	**92.1**	**38.9**	**130.2**	**166.7**	**45.2**	**16.7**	**14.3**	**24.6**	**54.0**	**29.4**	**22.7**	**12**	GRA106RRB	S1106K	T-40242	**1.594**
VAK	1 7/16	1 13/16	3 5/8	1 17/32	5 1/8	6 9/16	1 25/32	21/32	9/16	31/32	2 1/8	1 5/32	57/64	1/2	GRA107RRB	S1107K	(T-30410)	3.51
VAK	**35**														GRAE35RRB	SE35K		
VAK	1 1/2														GRA108RRB	S1108KT		
VAK	1 9/16	**49.21**	**100.0**	**43.7**	**136.5**	**179.4**	**47.6**	**19.0**	**14.3**	**26.2**	**60.3**	**32.5**	**23.8**	**12**	GRA109RRB	S1109KT	T-40243	**2.034**
VAK	**40**	1 15/16	3 15/16	1 23/32	5 3/8	7 1/16	1 7/8	3/4	9/16	1 1/32	2 3/8	1 9/32	15/16	1/2	GRAE40RRB	SE40K	(T-30484)	4.48
VAK	1 5/8														GRA110RRB	S1110K		
VAK	1 11/16	**52.39**	**104.8**	**43.7**	**149.2**	**191.3**	**50.8**	**17.5**	**14.3**	**28.6**	**63.5**	**32.5**	**25.4**	**12**	GRA111RRB	S1111K	T-40244	**2.261**
VAK	1 3/4	2 1/16	4 1/8	1 23/32	5 7/8	7 17/32	2	11/16	9/16	1 1/8	2 1/2	1 9/32	1	1/2	GRA112RRB	S1112K	(T-30682)	4.98
VAK	**45**														GRAE45RRB	SE45K		
VAK	1 7/8														GRA114RRB	S1114K		
VAK	1 15/16	**55.56**	**112.7**	**43.7**	**158.0**	**200.0**	**55.6**	**17.5**	**17.5**	**23.8**	**69.8**	**32.5**	**27.8**	**16**	GRA115RRB	S1115K	T-40245	**2.774**
VAK	2 S	2 3/16	4 7/16	1 23/32	6 7/32	7 7/8	2 3/16	11/16	11/16	15/16	2 3/4	1 9/32	1 3/32	5/8	GRA115RRB2	S1115K2	(T-30706)	6.11
VAK	**50**														GRAE50RRB	SE50K		
VAK	2														GRA200RRB	S1200K		
VAK	2 3/16	**61.91**	**124.6**	**48.4**	**176.2**	**222.3**	**58.7**	**19.0**	**18.3**	**29.4**	**76.2**	**36.5**	**29.4**	**16**	GRA203RRB	S1203K	T-40246	**3.328**
VAK	**55**	2 7/16	4 29/32	1 29/32	6 15/16	8 3/4	2 5/16	3/4	23/32	1 5/32	3	1 7/16	1 5/32	5/8	GRAE55RRB	SE55K	(T-30738)	7.33

NOTE: All units have 1/8 pipe-thread grease fitting except 1/2 – 1 1/16 and 3/4 units, which have 1/4-28 fitting.
NOTE: Shaft diameter with an S = smaller housing.

SAK STANDARD SERIES

- The streamlined, rugged, one-piece pillow block combines an RAK housing and GYA-RRB set screw bearing.
- GYA-RRB bearing employs a positive-contact, land-riding seal and specially designed set screws.
- This pillow block can be mounted to operate in any position.
- Bearing housed units are factory-prelubricated, but a grease fitting is provided to allow for relubrication if required.

Suggested shaft tolerances:

1/2 in. – 1 15/16 in., nominal to -0.013 mm, -0.0005 in.;
2 in. – 2 3/16 in., nominal -0.025 mm, -0.0010 in.

To order, specify UNIT and SHAFT DIAMETER.

Example: SAK 1 in.

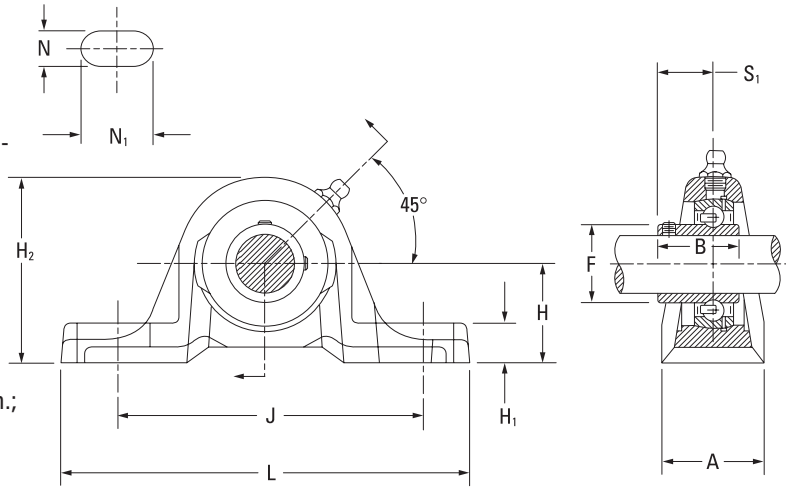

BEARING DATA

Unit	Bearing No.	Dimensions and Load Ratings
SAK	GYA-RRB	Page A-54

Unit	Shaft Dia.	Basic Bearing No.	H	H_2	S_1	J	L	A	H_1	N	N_1	F	B	Bolt Size	Bearing No.	Housing No.	Unit Wt.
	in. **mm**	**mm** in.	**mm** in.	**mm** in.	**mm** in.	**mm** in.	**mm** in.	**mm** in.	**mm** in.	**mm** in.	**mm** in.	**mm** in.	**mm** in.			New (Old)	**kg** lbs.
SAK SAK SAK	1/2 5/8 **17**	203	**26.99** 1 1/16	**53.2** 2 3/32	**15.9** 5/8	**92.1** 3 5/8	**123.8** 4 7/8	**30.2** 1 3/16	**8.7** 11/32	**11.1** 7/16	**22.2** 7/8	**24.6** 31/32	**23.8** 15/16	10 3/8	GYA008RRB GYA010RRB GYAE17RRB	T40238 (T30595)	**0.42** 0.92
SAK SAK	3/4 **20**	204	**31.75** 1 1/4	**62.7** 2 15/32	**18.3** 23/32	**96.0** 3 25/32	**127** 5	**31.8** 1 1/4	**11.9** 15/32	**11.1** 7/16	**19.8** 25/32	**29.0** 1 9/64	**31.8** 1 1/16	10 3/8	GYA012RRB GYAE20RRB	T40239 (T30555)	**0.57** 1.25
SAK SAK SAK SAK	7/8 15/16 1 **25**	205	**33.34** 1 5/16	**68** 2 11/16	**19.4** 49/64	**104.8** 4 1/8	**139.7** 5 1/2	**35.7** 1 13/32	**11.9** 15/32	**11.1** 7/16	**20.6** 13/16	**33.7** 1 21/64	**34.9** 1 7/64	10 3/8	GYA014RRB GYA015RRB GYA100RRB GYAE25RRB	T30365	**0.76** 1.67
SAK SAK SAK SAK	1 1/8 1 3/16 1 1/4 S **30**	206	**39.69** 1 9/16	**80.2** 3 5/32	**23.0** 29/32	**117.5** 4 5/8	**157.2** 6 3/16	**39.7** 1 9/16	**13.5** 17/32	**14.3** 9/16	**23.8** 15/16	**40.1** 1 37/64	**32.5** 1 9/32	12 1/2	GYA102RRB GYA103RRB GYA103RRB2 GYAE30RRB	T40241 (T30300)	**1.14** 2.52
SAK SAK SAK SAK	1 1/4 1 3/8 1 7/16 **35**	207	**46.04** 1 13/16	**92.1** 3 5/8	**25.8** 1 1/64	**130.2** 5 1/8	**166.7** 6 9/16	**45.2** 1 25/32	**16.7** 21/32	**14.3** 9/16	**24.6** 31/32	**46.8** 1 70/83	**36.5** 1 7/16	12 1/2	GYA104RRB GYA106RRB GYA107RRB GYAE35RRB	T40242 (T30410)	**1.52** 3.35
SAK SAK	1 1/2 **40**	208	**49.21** 1 15/16	**100.0** 3 15/16	**27.8** 1 3/32	**136.5** 5 3/8	**179.4** 7 1/16	**47.6** 1 7/8	**19.1** 3/4	**14.3** 9/16	**26.2** 1 1/32	**52.4** 2 1/16	**39.3** 1 35/64	12 1/2	GYA108RRB GYAE40RRB	T40243 (T30484)	**1.85** 4.08
SAK SAK SAK SAK	1 5/8 1 11/16 1 3/4 **45**	209	**52.39** 2 1/16	**104.8** 4 1/8	**28.6** 1 1/8	**149.2** 5 7/8	**191.3** 7 17/32	**50.8** 2	**17.5** 11/16	**14.3** 9/16	**28.6** 1 1/8	**57.9** 2 9/32	**42.1** 1 21/32	12 1/2	GYA110RRB GYA111RRB GYA112RRB GYAE45RRB	T40244 (T30682)	**2.06** 4.55
SAK SAK SAK	1 15/16 2S **50**	210	**55.56** 2 3/16	**112.7** 4 7/16	**31.0** 1 7/32	**158.0** 6 7/32	**200.2** 7 7/8	**55.6** 2 3/16	**17.5** 11/16	**17.5** 11/16	**23.8** 15/16	**62.7** 2 15/32	**44.5** 1 3/4	16 5/8	GYA115RRB GYA115RRB2 GYAE50RRB	T40245 (T30706)	**2.54** 5.60
SAK SAK SAK	2 2 3/16 **55**	211	**61.91** 2 7/16	**124.6** 4 29/32	**31.8** 1 1/4	**176.2** 6 15/16	**222.3** 8 3/4	**58.7** 2 5/16	**19.1** 3/4	**18.3** 23/32	**29.4** 1 5/32	**69.9** 2 3/4	**46.4** 1 53/64	16 5/8	GYA200RRB GYA203RRB GYAE55RRB	T40246 (T30738)	**3.02** 6.66

NOTE: All units have a 1/8 pipe-thread grease fitting except 1/2 – 1 1/16 and 3/4 units which have 1/4-28 fitting.

RAS, TAS, LAS INDUSTRIAL SERIES

- Heavier than our standard block with solid, flat feet for increased strength.
- Timken RAS, TAS and LAS pillow blocks are similar in design and equal in load-carrying capacity to the RAK, TAK and LAK types.
- RAS, TAS and LAS types have a slightly higher base-to-center height dimension than the RAK, TAK and LAK types, making them interchangeable with other competitive designs.
- The RAS pillow block is equipped with G-KRRB (R-seal) wide-inner-ring ball bearings, the TAS with G-KPPB (tri-ply seal) wide-inner-ring ball bearings, and the LAS with the G-KLLB (Mechani-seal) wide-inner-ring ball bearings.
- Contact your Timken engineer to discuss highly corrosive applications (food processing, chemical exposure) where Timken thin-dense chrome-coated bearings can be utilized.

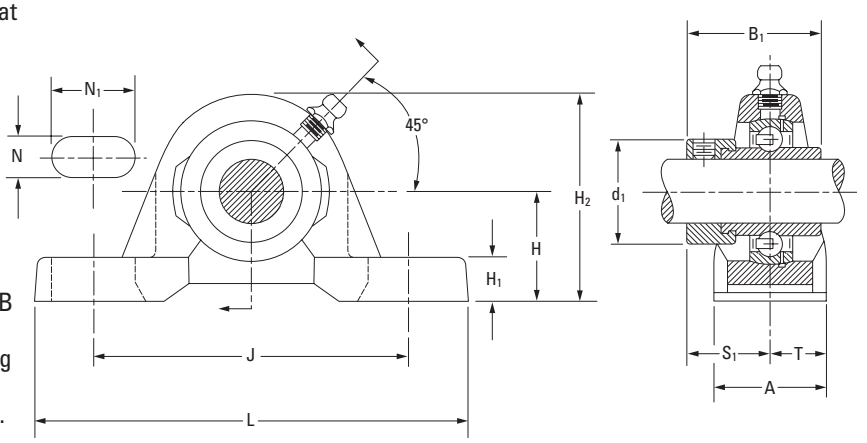

Suggested shaft tolerances:

1/2 in. – 1 15/16 in., nominal to -0.013 mm, -0.0005 in.;

2 in. – 2 15/16 in., nominal to -0.025 mm, -0.0010 in.

To order, specify UNIT and SHAFT DIAMETER.

Example: RAS 1 3/16 in.

BEARING DATA

Unit	Bearing No.	Dimensions and Load Ratings
RAS	G-KRRB	Page A-34
TAS	G-KPPB	Page A-39
LAS	G-KLLB	Page A-37

Unit	Shaft Dia.	H	H_2	B_1	J	L	A	H_1	N	N_1	d_1	S_1	T	Bolt Size	Bearing No.[1]		Collar No.	Housing No.	Unit Wt.
	in. **mm**	**mm** in.	**mm** in.	**mm** in.	**mm** in.	**mm** in.	**mm** in.	**mm** in.	**mm** in.	**mm** in.	**mm** in.	**mm** in.	**mm** in.	**mm** in.	RAS	(TAS)		New (Old)	**kg** lbs.
RAS	1/2														G1008KRRB		S1008K		
RAS	5/8	**30.16**	**56.4**	**37.3**	**92.1**	**123.8**	**30.2**	**11.9**	**11.1**	**22.2**	**28.6**	**23.4**	**15.1**	**10**	G1010KRRB		S1010K	T-40238	**0.454**
RAS	11/16	1 3/16	2 7/32	1 15/32	3 5/8	4 7/8	1 3/16	15/32	7/16	7/8	1 1/8	59/64	19/32	3/8	G1011KRRB		S1011K	(T-30595)	1.00
RAS	**17**														GE17KRRB		SE17K		
RAS	3/4	**33.34**	**65.9**	**43.7**	**96.4**	**127.0**	**33.3**	**15.1**	**11.1**	**20.2**	**33.3**	**26.6**	**16.7**	**10**	G1012KRRB		S1012K	M96830	**0.730**
RAS	**20**	1 5/16	2 19/32	1 23/32	3 51/64	5	1 5/16	19/32	7/16	51/64	1 5/16	1 3/64	21/32	3/8	GE20KRRB		SE20K		
RAS,TAS	7/8														G1014KRRB	(KPPB3)	S1014K		
RAS,TAS	15/16	**36.51**	**73.0**	**44.4**	**104.8**	**139.7**	**37.3**	**15.1**	**11.1**	**20.6**	**38.1**	**27.0**	**18.7**	**10**	G1015KRRB	(KPPB3)	S1015K	M96833	**1.610**
RAS,TAS,LAS	1	1 7/16	2 7/8	1 3/4	4 1/8	5 1/2	1 15/32	19/32	7/16	13/16	1 1/2	1 1/16	47/64	3/8	G1100KRRB	(KPPB3)	S1100K		0.95 2.10
RAS,TAS	**25**														GE25KRRB	(KPPB3)	SE25K		
RAS,TAS	1 1/16														G1101KRRB	(KPPB3)	S1101K		
RAS,TAS	1 1/8	**42.86**	**84.9**	**48.4**	**117.5**	**157.2**	**42.9**	**16.7**	**14.3**	**23.8**	**44.1**	**30.1**	**21.4**	**12**	G1102KRRB	(KPPB3)	S1102K	M96836	**1.420**
RAS,TAS,LAS	1 3/16	1 11/16	3 11/32	1 29/32	4 5/8	6 3/16	1 11/16	21/32	9/16	15/16	1 47/64	1 3/16	27/32	1/2	G1103KRRB	(KPPB3)	S1103K		3.14
RAS,TAS	**30**														GE30KRRB	(KPPB3)	SE30K		
RAS,TAS	1 1/4														G1104KRRB	(KPPB2)	S1104K		
RAS,TAS	1 5/16														G1105KRRB	(KPPB2)	S1105K		
RAS,TAS	1 3/8	**47.63**	**95.3**	**51.2**	**130.2**	**166.7**	**46.8**	**18.3**	**14.3**	**24.6**	**54.0**	**32.5**	**23.4**	**12**	G1106KRRB	(KPPB2)	S1106K	M96839	**1.890**
RAS,TAS,LAS	1 7/16	1 7/8	3 3/4	2 1/64	5 1/8	6 9/16	1 27/32	23/32	9/16	31/32	2 1/8	1 9/32	59/64	1/2	G1107KRRB	(KPPB2)	S1107K		4.18
RAS,TAS	**35**														GE35KRRB	(KPPB2)	SE35K		
RAS,TAS	1 1/2	**49.21**	**101.6**	**56.4**	**136.5**	**179.4**	**51.6**	**19.1**	**14.3**	**26.2**	**60.3** 2	**34.9**	**25.8**	**12**	G1108KRRB	(KPPB3)	S1108KT	M96842	**2.490**
RAS,TAS	1 9/16	1 15/16	4	2 7/32	5 3/8	7 1/16	2 1/32	3/4	9/16	1 1/32	3/8	1 3/8	1 1/64	1/2	G1109KRRB	(KPPB3)	S1109KT		5.50
RAS,TAS	**40**														GE40KRRB	(KPPB3)	SE40K		

[1]Bearing number for RAS is G-KRRB. TAS uses G-KPPB. LAS uses G-KLLB.

NOTE: All units have 1/8 pipe-thread grease fitting except 1/2 – 1 1/16 and 3/4 units, which have 1/4-28 fitting.

Continued on next page.

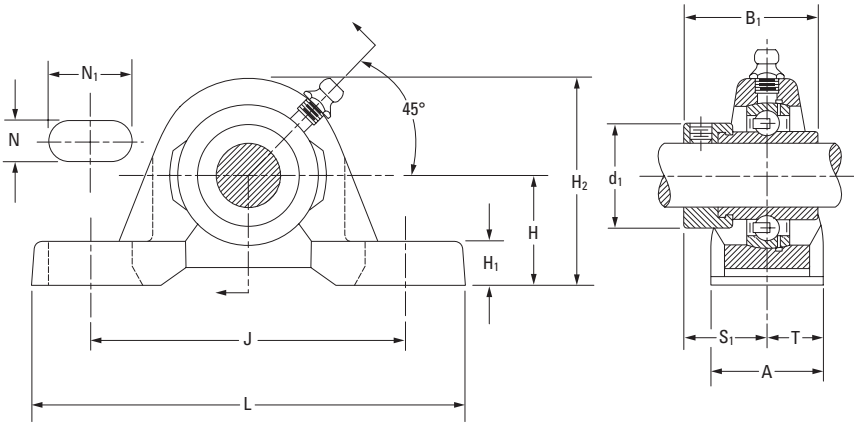

Continued from previous page.

Unit	Shaft Dia.	H	H_2	B_1	J	L	A	H_1	N	N_1	d_1	S_1	T	Bolt Size	Bearing No.[1]		Collar No.	Housing No.	Unit Wt.
	in. **mm**	**mm** in.	**mm** in.	**mm** in.	**mm** in.	**mm** in.	**mm** in.	**mm** in.	**mm** in.	**mm** in.	**mm** in.	**mm** in.	**mm** in.	**mm** in.	RAS	(TAS)		New (Old)	**kg** lbs.
RAS,TAS	1 5/8														G1110KRRB	(KPPB4)	S1110K		
RAS,TAS	1 11/16	**53.98**	**106.4**	**56.4**	**149.2**	**191.3**	**52.4**	**19.1**	**14.3**	**28.6**	**63.5**	**34.9**	**26.2**	**12**	G1111KRRB	(KPPB4)	S1111K	M96844	**3.200**
RAS,TAS	1 3/4	2 1/8	4 3/16	2 7/32	5 7/8	7 17/32	2 1/16	3/4	9/16	1 1/8	2 1/2	1 3/8	1 1/32	1/2	G1112KRRB	(KPPB4)	S1112K		7.06
RAS,TAS	**45**														GE45KRRB	(KPPB4)	SE45K		
RAS,TAS	1 7/8														G1114KRRB	(KPPB3)	S1114K		
RAS,TAS,LAS	1 15/16	**57.15**	**114.3**	**62.7**	**158.0**	**200.0**	**57.9**	**19.1**	**18.3**	**25.4**	**69.9**	**38.1**	**29.0**	**16**	G1115KRRB	(KPPB3)	S1115K	M96847	**4.010**
RAS,TAS	**50**	2 1/4	4 1/2	2 15/32	6 7/32	7 7/8	2 9/32	3/4	23/32	1	2 3/4	1 1/2	1 9/64	5/8	GE50KRRB	(KPPB3)	SE50K		8.86
RAS,TAS	2														G1200KRRB	(KPPB4)	S1200K		
RAS,TAS	2 1/8	**63.50**	**127.8**	**71.4**	**176.2**	**222.3**	**60.3**	**20.6**	**18.3**	**29.4**	**76.2**	**43.7**	**30.2**	**16**	G1202KRRB	(KPPB4)	S1202K	M96850	**3.901**
RAS,TAS	2 3/16	2 1/2	5 1/32	2 13/16	6 15/16	8 3/4	2 3/8	13/16	23/32	1 5/32	3	1 23/32	1 3/16	5/8	G1203KRRB	(KPPB4)	S1203K		8.60
RAS,TAS	**55**														GE55KRRB	(KPPB4)	SE55K		
RAS	2 1/4														G1204KRRB		S1204K		
RAS	2 3/8	**69.85**	**138.9**	**77.8**	**188.1**	**239.7**	**60.3**	**23.8**	**18.3**	**29.4**	**84.1**	**46.8**	**30.2**	**16**	G1206KRRB		S1206K	M99647	**5.511**
RAS,LAS	2 7/16	2 3/4	5 15/32	3 1/16	7 13/32	9 7/16	2 3/8	15/16	23/32	1 5/32	3 5/16	1 27/32	1 3/16	5/8	G1207KRRB		S1207K		12.15
RAS	**60**														GE60KRRB		SE60K		
RAS	2 15/16	**82.55**	**164.3**	**92.1**	**215.9**	**269.9**	**69.9**	**25.4**	**22.2**	**31.8**	**101.6**	**54.8**	**34.9**	**20**	G1215KRRB		S1215K	T-23423	**9.026**
RAS	**75**	3 1/4	6 15/32	3 5/8	8 1/2	10 5/8	2 3/4	1	7/8	1 1/4	4	2 5/32	1 3/8	3/4	GE75KRRB		SE75K		19.90

[1]Bearing number for RAS is G-KRRB. TAS uses G-KPPB. LAS uses G-KLLB.
NOTE: All units have 1/8 pipe-thread grease fitting except 1/2 – 11/16 and 3/4 units, which have 1/4-28 fitting.

RASC INDUSTRIAL-SERIES CONCENTRIC COLLAR

- Heavier than our standard block with solid, flat feet for increased strength.
- All RASC pillow blocks are equipped with GC-KRRB (R-seal) wide-inner-ring ball bearings with concentric collars.
- Pillow blocks self-align at mounting with the spherical outside diameter of the bearing fitting into a corresponding spherical housing seat.
- Units are prelubricated and ready for immediate installation.
- Grease fitting provides for relubrication if required.
- Concentric collars are supplied with all units.

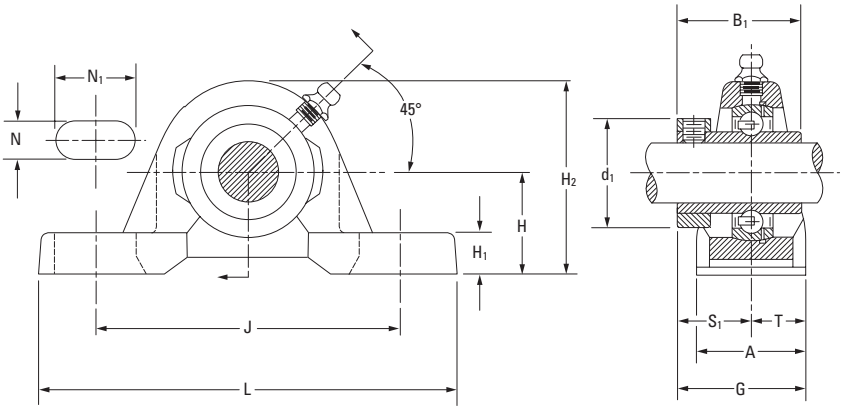

Suggested shaft tolerances:

1/2 in. – 1 15/16 in., nominal to -0.013 mm, -0.0005 in.;

2 in. – 2 15/16 in., nominal to -0.025 mm, -0.0010 in.

To order, specify UNIT and SHAFT DIAMETER.

Example: RASC 1 in.

BEARING DATA

Unit	Bearing No.	Dimensions and Load Ratings
RASC	GC-KRRB	Page A-40

Unit	Shaft Dia.	H	H_2	B_1	J	L	A	H_1	N	N_1	d_1	S_1	T	G	Bolt Size	Bearing No.	Collar No.	Housing No.	Unit Wt.
	in.	**mm** in.	**mm** in.	**mm** in.	**mm** in.	**mm** in.	**mm** in.	**mm** in.	**mm** in.	**mm** in.	**mm** in.	**mm** in.	**mm** in.	**mm** in.	**mm** in.			New (Old)	**kg** lbs.
RASC	5/8	**30.16** 1 3/16	**56.4** 2 7/32	**26.6** 1 3/64	**92.1** 3 5/8	**123.8** 4 7/8	**30.2** 1 3/16	**11.9** 15/32	**11.1** 7/16	**22.2** 7/8	**34.1** 1 11/32	**15.5** 39/64	**15.08** 19/32	**30.53** 1 13/64	**10** 3/8	GC1010KRRB	C203	T-40238 (T-30595)	**0.454** 1.00
RASC	3/4	**33.34** 1 5/16	**65.9** 2 19/32	**31.0** 1 7/32	**96.0** 3 25/32	**127.0** 5	**33.3** 1 5/16	**15.1** 19/32	**11.1** 7/16	**19.8** 25/32	**38.1** 1 1/2	**18.7** 47/64	**16.70** 21/32	**35.32** 1 25/64	**10** 3/8	GC1012KRRB	C204	M96830	**0.635** 1.40
RASC	1	**36.51** 1 7/16	**73.0** 2 7/8	**34.1** 1 11/32	**104.8** 4 1/8	**139.7** 5 1/2	**37.3** 1 15/32	**15.1** 19/32	**11.1** 7/16	**20.2** 13/16	**44.4** 1 3/4	**20.2** 51/64	**18.70** 47/64	**38.89** 1 17/32	**10** 3/8	GC1100KRRB	C205	M96833	**0.803** 1.77
RASC RASC RASC	1 1/8 1 3/16 1 1/4 S	**42.86** 1 11/16	**84.9** 3 11/32	**37.3** 1 15/32	**117.5** 4 5/8	**157.2** 6 3/16	**42.9** 1 11/16	**16.7** 21/32	**14.3** 9/16	**23.8** 15/16	**52.4** 2 1/16	**22.6** 57/64	**21.40** 27/32	**44.05** 1 47/64	**12** 1/2	GC1102KRRB GC1103KRRB GC1103KRRB3	C206	M96836	**1.297** 2.86
RASC RASC RASC	1 1/4 1 3/8 1 7/16	**47.62** 1 7/8	**95.3** 3 3/4	**41.3** 1 5/8	**130.2** 5 1/8	**166.7** 6 9/16	**46.8** 1 27/32	**18.3** 23/32	**14.3** 9/16	**24.6** 31/32	**59.5** 2 11/32	**25.4** 1	**23.40** 59/64	**48.81** 1 59/64	**12** 1/2	GC1104KRRB GC1106KRRB GC1107KRRB	C207	M96839	**1.674** 3.69
RASC	1 1/2	**49.21** 1 15/16	**101.6** 4	**44.1** 1 47/64	**136.5** 5 3/8	**179.4** 7 1/16	**51.6** 2 1/32	**19.1** 3/4	**14.3** 9/16	**26.2** 1 1/32	**68.3** 2 11/16	**27.4** 1 5/64	**25.80** 1 1/64	**53.16** 2 15/16	**12** 1/2	GC1108KRRB	C208	M96842	**2.150** 4.74
RASC RASC	1 11/16 1 3/4	**53.98** 2 1/8	**106.4** 4 3/16	**46.8** 1 27/32	**149.2** 5 7/8	**191.3** 7 17/32	**52.4** 2 1/16	**19.1** 3/4	**14.3** 9/16	**23.0** 29/32	**73.0** 2 7/8	**29.4** 1 5/32	**26.20** 1 1/32	**55.55** 2 3/16	**12** 1/2	GC1111KRRB GC1112KRRB	C209	M96844	**2.409** 5.31
RASC	1 15/16	**57.15** 2 1/4	**114.3** 4 1/2	**48.4** 1 29/32	**158.0** 6 7/32	**200.0** 7 7/8	**57.9** 2 9/32	**19.1** 3/4	**17.5** 11/16	**23.8** 15/16	**79.4** 3 1/8	**30.2** 1 3/16	**29.00** 1 9/64	**59.13** 2 21/64	**16** 5/8	GC1115KRRB	C210	M96847	**3.003** 6.62
RASC RASC	2 2 3/16	**63.50** 2 1/2	**127.8** 5 1/32	**54.0** 2 1/8	**176.2** 6 15/16	**222.3** 8 3/4	**60.3** 2 3/8	**20.6** 13/16	**18.3** 23/32	**29.4** 1 5/32	**88.9** 3 1/2	**33.3** 1 5/16	**30.20** 1 3/16	**62.70** 2 15/32	**16** 5/8	GC1200KRRB GC1203KRRG	C211	M96850	**3.901** 8.60
RASC	2 7/16	**69.85** 2 3/4	**138.9** 5 15/32	**60.3** 2 3/8	**188.1** 7 13/32	**239.7** 9 7/16	**60.3** 2 3/8	**23.8** 15/16	**18.3** 23/32	**29.4** 1 5/32	**95.2** 3 3/4	**37.3** 1 15/32	**30.20** 1 3/16	**67.46** 2 21/32	**16** 5/8	GC1207KRRB	C212	M99647	**5.511** 12.15
RASC	2 15/16	**82.55** 3 1/4	**164.3** 6 15/32	**70.6** 2 25/32	**215.9** 8 1/2	**269.9** 10 5/8	**69.9** 2 3/4	**25.4** 1	**22.2** 7/8	**31.8** 1 1/4	**114.3** 4 1/2	**43.7** 1 23/32	**34.90** 1 3/8	**78.60** 3 3/32	**20** 3/4	GC1215KRRB	C215	T 23423	**9.060** 19.91

NOTE: All units have 1/8 pipe-thread grease fitting except RASC 1/2 – 11/16 and 3/4 units, which have 1/4-28 fitting.

YAS INDUSTRIAL-SERIES SET SCREW UNITS

- Incorporates Shaft Guarding Technology, which reduces replacement time, provides shaft protection and prolongs the life of the shaft.
- Heavier than our standard block with solid, flat feet for increased strength.
- Timken YAS-series high-base, set screw pillow blocks feature the GY-KRRB bearing.
- This full-width inner ring set screw is well-suited for industrial applications involving wet or dirty environments.
- Housing is designed for two-bolt mounting in any position.
- Contact your Timken engineer to discuss highly corrosive applications (food processing, chemical exposure) where Timken thin-dense chrome-coated bearings can be utilized.

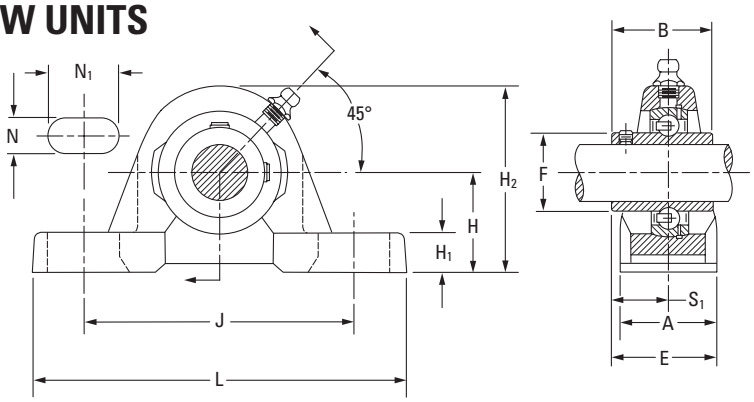

Suggested shaft tolerances:

1/2 in. – 1 15/16 in., nominal to -0.013 mm, -0.0005 in.;
2 in. – 2 15/16 in., nominal to -0.025 mm, -0.0010 in.

BEARING DATA

Unit	Bearing No.	Dimensions and Load Ratings
YAS	GY-KRRB	Page A-44

To order, specify UNIT and SHAFT DIAMETER.
Example: YAS 1 7/16 in.

Unit	Shaft Dia.	H	H_2	B	L	J	A	H_1	N	N_1	F	S_1	E	Bolt Size	Bearing No.	Housing No.	Unit Wt.
	in. **mm**	**mm** in.	**mm** in.	**mm** in.	**mm** in.	**mm** in.	**mm** in.	**mm** in.	**mm** in.	**mm** in.	**mm** in.	**mm** in.	**mm** in.	**mm** in.			**kg** lbs.
YAS YAS YAS	1/2 5/8 **17**	**30.16** 1 3/16	**56.4** 2 7/32	**27.4** 1 5/64	**123.8** 4 7/8	**92.1** 3 5/8	**30.2** 1 3/16	**11.9** 15/32	**11.1** 7/16	**22.2** 7/8	**22.9** 0.900	**15.9** 5/8	**31.0** 1 7/32	**10** 3/8	GY1008KRRB GY1010KRRB GYE17KRRB	T40238	**0.4536** 1.0000
YAS YAS	3/4 SGT **20 SGT**	**33.34** 1 5/16	**65.9** 2 19/32	**31.8** 1 1/4	**127.0** 5	**96.4** 3 51/64	**33.3** 1 5/16	**15.1** 19/32	**11.1** 7/16	**20.2** 51/64	**27.6** 1.085	**19.1** 3/4	**35.7** 1 13/32	**10** 3/8	GY1012KRRB SGT GYE20KRRB SGT	M96830	**0.7027** 1.5491
YAS YAS YAS YAS	7/8 SGT 15/16 SGT 1 SGT **25 SGT**	**36.51** 1 7/16	**73.0** 2 7/8	**34.9** 1 3/8	**139.7** 5 1/2	**104.8** 4 1/8	**37.3** 1 15/32	**15.1** 19/32	**11.1** 7/16	**20.6** 13/16	**33.8** 1.332	**20.6** 13/16	**39.3** 1 35/64	**10** 3/8	GY1014KRRB SGT GY1015KRRB SGT GY1100KRRB SGT GYE25KRRB SGT	M96833	**0.9535** 2.1022
YAS YAS YAS YAS	1 1/8 SGT 1 3/16 SGT 1 1/4 S **30 SGT**	**42.86** 1 11/16	**84.9** 3 11/32	**39.3** 1 35/64	**157.2** 6 3/16	**117.5** 4 5/8	**42.9** 1 11/16	**16.7** 21/32	**14.3** 9/16	**23.8** 15/16	**40.3** 1.587	**23.4** 59/64	**44.8** 1 49/64	**12** 1/2	GY1102KRRB SGT GY1103KRRB SGT GY1103KRRB3 SGT GYE30KRRB SGT	M96836	**1.4275** 3.1472
YAS YAS YAS YAS	1 1/4 SGT 1 3/8 SGT 1 7/16 SGT **35 SGT**	**47.63** 1 7/8	**95.3** 3 3/4	**45.2** 1 25/32	**166.7** 6 9/16	**130.2** 5 1/8	**46.8** 1 27/32	**18.3** 23/32	**14.3** 9/16	**24.6** 31/32	**46.8** 1.844	**28.2** 1 7/64	**51.6** 2 1/32	**12** 1/2	GY1104KRRB SGT GY1106KRRB SGT GY1107KRRB SGT GYE35KRRB SGT	M96839	**1.8981** 4.1847
YAS YAS	1 1/2 SGT **40 SGT**	**49.21** 1 15/16	**101.6** 4	**49.2** 1 15/16	**179.4** 7 1/16	**136.5** 5 3/8	**51.6** 2 1/32	**19.1** 3/4	**14.3** 9/16	**26.2** 1 1/32	**52.3** 2.058	**30.2** 1 3/16	**56.0** 2 13/34	**12** 1/2	GY1108KRRB SGT GYE40KRRB SGT	M96842	**2.4763** 5.4592
YAS YAS YAS YAS	1 5/8 SGT 1 11/16 SGT 1 3/4 SGT **45 SGT**	**53.98** 2 1/8	**106.4** 4 3/16	**50.4** 1 63/64	**191.3** 7 17/32	**149.2** 5 7/8	**52.4** 2 1/16	**19.1** 3/4	**14.3** 9/16	**28.6** 1 1/8	**57.9** 2.280	**31.4** 1 15/64	**57.5** 2 17/64	**12** 1/2	GY1110KRRB SGT GY1111KRRB SGT GY1112KRRB SGT GYE45KRRB SGT	M96844	**2.681** 5.9107
YAS YAS YAS	1 15/16 SGT 2S **50 SGT**	**57.15** 2 1/4	**114.3** 4 1/2	**51.6** 2 1/32	**200.2** 7 7/8	**158.0** 6 7/32	**57.9** 2 9/32	**19.1** 3/4	**18.3** 23/32	**25.4** 1	**62.8** 2.474	**32.5** 1 9/32	**61.5** 2 27/64	**16** 5/8	GY1115KRRB SGT GY1115KRRB2 GYE50KRRB SGT	M96847	**3.3136** 7.3053
YAS YAS YAS	2 SGT 2 3/16 SGT **55 SGT**	**63.50** 2 1/2	**127.8** 5 1/32	**55.6** 2 3/16	**222.3** 8 3/4	**176.2** 6 15/16	**60.3** 2 3/8	**20.6** 13/16	**18.3** 23/32	**29.4** 1 5/32	**69.8** 2.747	**33.3** 1 5/16	**61.9** 2 7/16	**16** 5/8	GY1200KRRB SGT GY1203KRRB SGT GYE55KRRB SGT	M96850	**3.9009** 8.6000
YAS YAS YAS	2 1/4 SGT 2 7/16 SGT **60 SGT**	**69.85** 2 3/4	**138.9** 5 15/32	**65.1** 2 9/16	**239.7** 9 7/16	**188.1** 7 13/32	**60.3** 2 3/8	**23.8** 15/16	**18.3** 23/32	**29.4** 1 5/32	**76.5** 3.011	**39.7** 1 9/16	**69.9** 2 3/4	**16** 5/8	GY1204KRRB SGT GY1207KRRB SGT GYE60KRRB SGT	M99647	**4.7718** 10.5200
YAS YAS	2 15/16 **75**	**82.55** 3 1/4	**164.3** 6 15/32	**69.9** 2 3/4	**269.9** 10 5/8	**215.9** 8 1/2	**69.4** 2 3/4	**25.4** 1	**14.3** 7/8	**34.9** 1 3/8	**91.9** 3.618	**30.2** 1 3/4	**79.4** 3 1/8	**20** 3/4	GY1215KRRB GYE75KRRB	T23423	**7.9197** 17.4600
YAS	2 15/16 H	**88.40** 3 1/2	**177.8** 7	**77.8** 3 1/16	**330.2** 13	**241.3** 9 1/2	**88.9** 3 1/2	**31.8** 1 1/4	**23.8** 15/16	**31.8** 1 1/4	**91.9** 3.619	**30.2** 1 3/4	**88.9** 3 1/2	20 3/4	GY1215KRRB	T22305	**8.4187** 18.5600

NOTE: Shaft diameter with an S = Smaller housing; Shaft diameter with an H = heavier housing.

VAS STANDARD SERIES

- Timken VAS pillow blocks are similar in design and features, and equal in load-carrying capacity, to the VAK series.
- The slightly different base-to-center height dimension makes them interchangeable with certain other competitive designs.
- The units are prelubricated and ready for immediate installation.
- A grease fitting is provided for relubrication if required.

Suggested shaft tolerances:

1/2 in. – 1 15/16 in., nominal to -0.013 mm, -0.0005 in.;

2 in. – 2 3/16 in., nominal to -0.025 mm, -0.0010 in.

To order, specify UNIT and SHAFT DIAMETER.

Example: VAS 1 3/16 in.

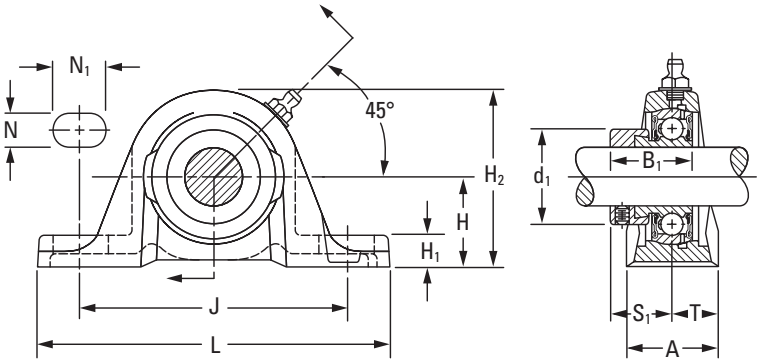

BEARING DATA

Unit	Bearing No.	Dimensions and Load Ratings
VAS	GRA-RRB	Page A-50

Unit	Shaft Dia.	H	H_2	B_1	J	L	A	H_1	N	N_1	d_1	S_1	T	Bolt Size	Bearing No.	Collar No.	Housing No.	Unit Wt.
	in. **mm**	**mm** in.	**mm** in.	**mm** in.	**mm** in.	**mm** in.	**mm** in.	**mm** in.	**mm** in.	**mm** in.	**mm** in.	**mm** in.	**mm** in.	**mm** in.			New (Old)	**kg** lbs.
VAS	1/2														GRA008RRB	S1008K		
VAS	5/8	**30.16**	**56.4**	**28.6**	**92.1**	**123.8**	**30.2**	**11.9**	**11.1**	**22.2**	**28.6**	**22.2**	**15.1**	**10**	GRA010RRB	S1010K	T-40238	**0.454**
VAS	**17**	1 3/16	2 7/32	1 1/8	3 5/8	4 7/8	1 3/16	15/32	7/16	7/8	1 1/8	7/8	19/32	3/8	GRAE17RRB	SE17K	(T-30595)	1.00
VAS	3/4	**33.34**	**64.3**	**31.0**	**96.0**	**127.0**	**31.8**	**13.5**	**11.1**	**19.8**	**33.3**	**23.4**	**15.9**	**10**	GRA012RRB	S1012K	T-40239	**0.563**
VAS	**20**	1 5/16	2 17/32	1 7/32	3 25/32	5	1 1/4	17/32	7/16	25/32	1 5/16	59/64	5/8	3/8	GRAE20RRB	SE20K	(T-30555)	1.24
VAS	7/8														GRA014RRB	S1014K		
VAS	15/16	**36.51**	**71.4**	**31.0**	**104.8**	**139.7**	**35.7**	**15.1**	**11.1**	**20.6**	**38.1**	**23.4**	**17.9**	**10**	GRA015RRB	S1015K	T-30365	**0.758**
VAS	1	1 7/16	2 13/16	1 7/32	4 1/8	5 1/2	1 13/32	19/32	7/16	13/16	1 1/2	59/64	45/64	3/8	GRA100RRB	S1100K		1.67
VAS	**25**														GRAE25RRB	SE25K		
VAS	1 1/8														GRA102RRB	S1102K		
VAS	1 3/16	**42.86**	**83.3**	**35.7**	**117.5**	**157.2**	**39.7**	**16.7**	**14.3**	**23.8**	**44.1**	**27.0**	**19.9**	**12**	GRA103RRB	S1103K	T-40241	**1.235**
VAS	1 1/4 S	1 11/16	3 9/32	1 13/32	4 5/8	6 3/16	1 9/16	21/32	9/16	15/16	1 47/64	1 1/16	25/32	1/2	GRA103RRB2	S1103K3	(T-30300)	2.72
VAS	**30**														GRAE30RRB	SE30K		
VAS	1 1/4														GRA104RRB	S1104K		
VAS	1 3/8	**47.62**	**93.7**	**38.9**	**130.2**	**166.7**	**45.2**	**18.3**	**14.3**	**24.6**	**54.0**	**29.4**	**22.7**	**12**	GRA106RRB	S1106K	T-40242	**1.594**
VAS	1 7/16	1 7/8	3 11/16	1 17/32	5 1/8	6 9/16	1 25/32	23/32	9/16	31/32	2 1/8	1 5/32	57/64	1/2	GRA107RRB	S1107K	(T-30410)	3.51
VAS	**35**														GRAE35RRB	SE35K		
VAS	1 1/2	**49.21**	**100.0**	**43.7**	**136.5**	**179.4**	**47.6**	**19.0**	**14.3**	**26.2**	**60.3**	**32.5**	**23.8**	**12**	GRA108RRB	S1108KT	T-40243	**2.034**
VAS	**40**	1 15/16	3 15/16	1 23/32	5 3/8	7 1/16	1 7/8	3/4	9/16	1 1/32	2 3/8	1 9/32	15/16	1/2	GRAE40RRB	SE40K	(T-30484)	4.48
VAS	1 5/8														GRA110RRB	S1110K		
VAS	1 11/16	**53.98**	**106.4**	**43.7**	**149.2**	**191.3**	**50.8**	**19.0**	**14.3**	**28.6**	**63.5** 2	**32.5**	**25.4**	**12**	GRA111RRB	S1111K	T-40244	**2.261**
VAS	1 3/4	2 1/8	4 3/16	1 23/32	5 7/8	7 17/32	2	3/4	9/16	1 1/8	1/2	1 9/32	1	1/2	GRA112RRB	S1112K	(T-30682)	4.98
VAS	**45**														GRAE45RRB	SE45K		
VAS	1 7/8														GRA114RRB	S1114K		
VAS	1 15/16	**57.15**	**114.3**	**43.7**	**158.0**	**200.0**	**55.6**	**19.0**	**18.3**	**29.4**	**69.8**	**32.5**	**27.8**	**16**	GRA115RRB	S1115K	T-40245	**2.774**
VAS	2 S	2 1/4	4 1/2	1 23/32	6 7/32	7 7/8	2 3/16	3/4	23/32	1 5/32	2 3/4	1 9/32	1 3/32	5/8	GRA115RRB2	S1115K2	(T-30706)	6.11
VAS	**50**														GRAE50RRB	SE50K		
VAS	2														GRA200RRB	S1200K		
VAS	2 3/16	**63.50**	**126.2**	**48.4**	**176.2**	**222.3**	**58.7**	**20.6**	**18.3**	**29.4**	**76.2**	**36.5**	**29.4**	**16**	GRA203RRB	S1203K	T-40246	**3.328**
VAS	**55**	2 1/2	4 31/32	1 29/32	6 15/16	8 3/4	2 5/16	13/16	23/32	1 5/32	3	1 7/16	1 5/32	5/8	GRAE55RRB	SE55K	(T-30738)	7.33

NOTE: All units have 1/8 pipe-thread grease fitting except 1/2 – 11/16 and 3/4 units, which have 1/4-28 fitting.

SAS STANDARD SERIES

- The SAS is a streamlined and rugged one-piece pillow block unit that combines the Timken engineered housing and a GYA-RRB set screw bearing.
- GYA-RRB bearing employs a positive-contact, land-riding seal and specially designed set screws.
- SAS pillow block can be mounted in any position.
- Bearing housed units are factory-prelubricated, but a grease fitting is provided to allow for relubrication if required.

Suggested shaft tolerances:

1/2 in. – 1 15/16 in., nominal to -0.013 mm, -0.0005 in.;

2 in. – 2 3/16 in., nominal to -0.025 mm, -0.0010 in.

To order, specify UNIT and SHAFT DIAMETER.

Example: SAS 1 in.

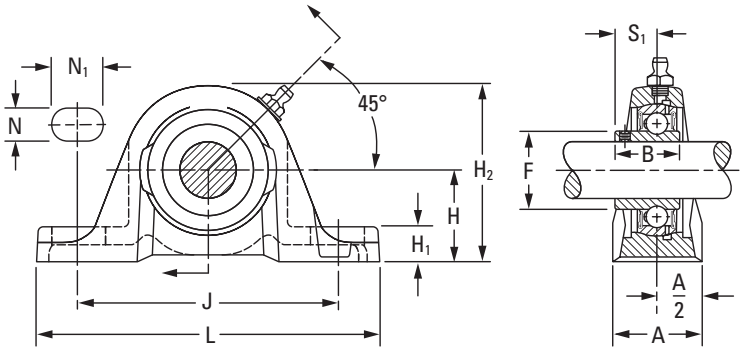

BEARING DATA

Unit	Bearing No.	Dimensions and Load Ratings
SAS	GYA-RRB	Page A-54

Unit	Shaft Dia.	H	H_2	S_1	J	L	A	H_1	N	N_1	F	B	Bolt Size	Bearing No.	Housing No.	Unit Wt.
	in. **mm**	**mm** in.	**mm** in.	**mm** in.	**mm** in.	**mm** in.	**mm** in.	**mm** in.	**mm** in.	**mm** in.	**mm** in.	**mm** in.	**mm** in.		New (Old)	**kg** lbs.
SAS SAS SAS	1/2 5/8 **17**	**30.16** 1 3/16	**56.4** 2 7/32	**15.9** 5/8	**92.1** 3 5/8	**123.8** 4 7/8	**30.2** 1 3/16	**11.9** 15/32	**11.1** 7/16	**22.2** 7/8	**24.6** 31/32	**23.8** 15/16	**10** 3/8	GYA008RRB GYA010RRB GYAE17RRB	T-40238 (T-30595)	**0.42** 0.92
SAS SAS	3/4 **20**	**33.34** 1 5/16	**64.3** 2 17/32	**18.3** 23/32	**96.0** 3 25/32	**127.0** 5	**31.8** 1 1/4	**13.5** 17/32	**11.1** 7/16	**19.8** 25/32	**29.0** 1 9/64	**27.0** 1 1/16	**10** 3/8	GYA012RRB GYAE20RRB	T-40239 (T-30555)	**0.57** 1.25
SAS SAS SAS SAS	7/8 15/16 1 **25**	**36.51** 1 7/16	**71.4** 2 13/16	**19.4** 49/64	**104.8** 4 1/8	**139.7** 5 1/2	**35.7** 1 13/32	**15.1** 19/32	**11.1** 7/16	**20.6** 13/16	**33.7** 1 21/64	**28.2** 1 7/64	**10** 3/8	GYA014RRB GYA015RRB GYA100RRB GYAE25RRB	T-30365	**0.75** 1.67
SAS SAS SAS SAS	1 1/8 1 3/16 1 1/4 S **30**	**42.86** 1 11/16	**83.3** 3 9/32	**23.0** 29/32	**117.5** 4 5/8	**157.2** 6 3/16	**39.7** 1 9/16	**16.7** 21/32	**14.3** 9/16	**23.8** 15/16	**40.1** 1 37/64	**32.5** 1 9/32	**12** 1/2	GYA102RRB GYA103RRB GYA103RRB2 GYAE30RRB	T-40241 (T-30300)	**1.14** 2.52
SAS SAS SAS SAS	1 1/4 1 3/8 1 7/16 **35**	**47.62** 1 7/8	**93.6** 3 11/16	**25.8** 1 1/64	**130.2** 5 1/8	**166.7** 6 9/16	**45.2** 1 25/32	**18.3** 23/32	**14.3** 9/16	**24.6** 31/32	**46.8** 1 27/32	**36.5** 1 7/16	**12** 1/2	GYA104RRB GYA106RRB GYA107RRB GYAE35RRB	T-40242 (T-30410)	**1.52** 3.35
SAS SAS	1 1/2 **40**	**49.21** 1 15/16	**100.0** 3 15/16	**27.8** 1 3/32	**136.5** 5 3/8	**179.4** 7 1/16	**47.6** 1 7/8	**19.0** 3/4	**14.3** 9/16	**26.2** 1 1/32	**52.4** 2 1/16	**39.3** 1 35/64	**12** 1/2	GYA108RRB GYAE40RRB	T-40243 (T-30484)	**1.85** 4.08
SAS	1 1/2 H	**53.90** 2 1/8	**100.0** 3 15/16	**27.8** 1 3/32	**136.5** 5 3/8	**179.4** 7 1/16	**47.6** 1 7/8	**19.0** 3/4	**14.3** 9/16	**26.2** 1 1/32	**52.4** 2 1/16	**39.3** 1 35/64	**12** 1/2	GYA108RRB	T-39528	**1.85** 4.08
SAS SAS SAS SAS	1 5/8 1 11/16 1 3/4 **45**	**53.90** 2 1/8	**106.3** 4 3/16	**28.6** 1 1/8	**149.2** 5 7/8	**191.3** 7 17/32	**51.0** 2	**19.0** 3/4	**14.3** 9/16	**28.6** 1 1/8	**57.9** 2 9/32	**42.1** 1 21/32	**12** 1/2	GYA110RRB GYA111RRB GYA112RRB GYAE45RRB	T-40244 (T-30682)	**2.06** 4.55
SAS SAS SAS	1 15/16 2 S **50**	**57.20** 2 1/4	**114.3** 4 1/2	**30.9** 1 7/32	**158.0** 6 7/32	**200.0** 7 7/8	**55.6** 2 3/16	**19.0** 3/4	**17.5** 11/16	**23.8** 15/16	**62.7** 2 15/32	**44.4** 1 3/4	**16** 5/8	GYA115RRB GYA115RRB2 GYAE50RRB	T-40245 (T-30706)	**2.54** 5.60
SAS SAS SAS	2 2 3/16 **55**	**63.50** 2 1/2	**126.2** 4 31/32	**31.7** 1 1/4	**176.2** 6 15/16	**222.3** 8 3/4	**58.7** 2 5/16	**20.6** 13/16	**18.3** 23/32	**29.4** 1 5/32	**69.8** 2 3/4	**46.4** 1 53/64	**16** 5/8	GYA200RRB GYA203RRB GYAE55RRB	T-40246 (T-30738)	**3.02** 6.66

NOTE: All units have 1/8 pipe-thread grease fitting except 1/2 – 11/16 and 3/4 units, which have 1/4-28 fitting.
NOTE: Shaft diameter with an S = smaller housing; Shaft diameter with an H = heavier housing.

RAKH INDUSTRIAL SERIES

- Timken pillow blocks are similar in design to other standard series, but have slightly different dimensions to allow interchangeability with competitive designs.
- These pillow blocks may be used independently or in connection with the RAKHL expansion unit shown at right. Used in this capacity, the RAKH pillow blocks provide fixed shaft location while the RAKHL expansion units allow for axial movement. Maximum operating temperature for the RAKH units is 121° C (250° F).
- The units are supplied with self-locking collars.
- Contact your Timken engineer to discuss highly corrosive applications (food processing, chemical exposure) where Timken thin-dense chrome-coated bearings can be utilized.

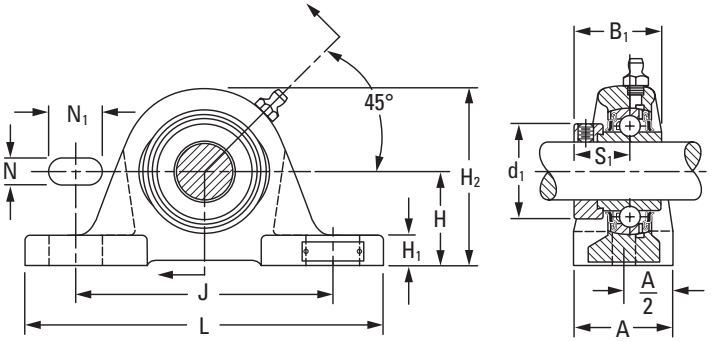

Suggested shaft tolerances:

13/16 in. – 1 15/16 in., nominal to -0.013 mm, -0.0005 in.;

2 in. – 2 15/16 in., nominal to -0.025 mm, -0.0010 in.

To order, specify UNIT and SHAFT DIAMETER.

Example: RAKH 1 7/16 in.

BEARING DATA

Unit	Bearing No.	Dimensions and Load Ratings
RAKH	G-KRRB	Page A-34

Unit[1]	Shaft Dia.	H	H_2	B_1	J	L	A	H_1	N	N_1	d_1	S_1	Bolt Size	Bearing No.	Collar No.	Housing No.	Unit Wt.
	in. **mm**	**mm** in.	**mm** in.	**mm** in.	**mm** in.	**mm** in.	**mm** in.	**mm** in.	**mm** in.	**mm** in.	**mm** in.	**mm** in.	**mm** in.			New	**kg** lbs.
RAKH	1	**44.45** 1 3/4	**82.6** 3 1/4	**44.4** 1 3/4	**119.1** 4 11/16	**158.8** 6 1/4	**50.8** 2	**15.9** 5/8	**14.3** 9/16	**25.4** 1	**38.1** 1 1/2	**27.0** 1 1/16	**12** 1/2	G1100KRRB	S1100K	T-22295	**1.689** 3.720
RAKH	1 3/16	**47.63** 1 7/8	**90.5** 3 9/16	**48.4** 1 29/32	**127.0** 5	**174.6** 6 7/8	**57.2** 2 1/4	**17.5** 11/16	**14.3** 9/16	**25.4** 1	**44.1** 1 47/64	**30.2** 1 3/16	**12** 1/2	G1103KRRB	S1103K	T-22216	**2.184** 4.810
RAKH RAKH	1 1/4 1 7/16	**53.98** 2 1/8	**101.6** 4	**51.2** 2 1/64	**144.5** 5 11/16	**203.2** 8	**57.2** 2 1/4	**19.0** 3/4	**14.3** 9/16	**30.2** 1 3/16	**54.0** 2 1/8	**32.5** 1 9/32	**12** 1/2	G1104KRRB G1107KRRB	S1104K S1107K	T-22212	**2.915** 6.420
RAKH	1 1/2	**58.74** 2 5/16	**111.1** 4 3/8	**56.4** 2 7/32	**155.6** 6 1/8	**222.2** 8 3/4	**66.7** 2 5/8	**20.6** 13/16	**17.5** 11/16	**31.8** 1 1/4	**60.3** 2 3/8	**34.9** 1 3/8	**16** 5/8	G1108KRRB	S1108KT	T-22291	**4.004** 8.820
RAKH RAKH	1 11/16 1 3/4	**58.74** 2 5/16	**114.3** 4 1/2	**56.4** 2 7/32	**155.6** 6 1/8	**222.2** 8 3/4	**66.7** 2 5/8	**20.6** 13/16	**17.5** 11/16	**33.3** 1 5/16	**63.5** 2 1/2	**34.9** 1 3/8	**16** 5/8	G1111KRRB G1112KRRB	S1111K S1112K	T-22293	**4.032** 8.880
RAKH	1 15/16	**63.50** 2 1/2	**122.2** 4 13/16	**62.7** 2 15/32	**171.4** 6 3/4	**241.3** 9 1/2	**73.0** 2 7/8	**22.2** 7/8	**17.5** 11/16	**36.5** 1 7/16	**69.8** 2 3/4	**38.1** 1 1/2	**16** 5/8	G1115KRRB	S1115K	T-22214	**5.098** 11.230
RAKH RAKH	2 3/16 **55**	**69.85** 2 3/4	**136.5** 5 3/8	**71.4** 2 13/16	**184.2** 7 1/4	**260.4** 10 1/4	**79.4** 3 1/8	**27.0** 1 1/16	**20.6** 13/16	**36.5** 1 7/16	**76.2** 3	**43.7** 1 23/32	**16** 5/8	G1203KRRB GE55KRRB	S1203K SE55K	T-22297	**6.728** 14.820
RAKH	2 7/16	**76.20** 3	**150.8** 5 15/16	**77.8** 3 1/16	**203.2** 8	**285.8** 11 1/4	**82.6** 3 1/4	**27.0** 1 1/16	**20.6** 13/16	**41.3** 1 5/8	**84.1** 3 5/16	**46.8** 1 27/32	**16** 5/8	G1207KRRB	S1207K	T-22299	**8.2170** 18.115
RAKH	2 11/16	**88.90** 3 1/2	**171.4** 6 3/4	**85.7** 3 3/8	**228.6** 9	**330.2** 13	**88.9** 3 1/2	**28.6** 1 1/8	**23.8** 15/16	**50.8** 2	**96.8** 3 13/16	**45.2** 1 25/32	**20** 3/4	G1211KRRB	S1211K	T-22303	**11.495** 25.320
RAKH	2 15/16	**88.90** 3 1/2	**177.8** 7	**92.1** 3 5/8	**228.6** 9	**330.2** 13	**88.9** 3 1/2	**31.8** 1 1/4	**23.8** 15/16	**50.8** 2	**101.6** 4	**54.8** 2 5/32	**20** 3/4	G1215KRRB	S1215K	T-22305	**11.795** 25.980

[1]When used with the expansion unit, specify both units, shaft diameter and suffix.

RAKHL EXPANSION SERIES

- The RAKH expansion series is designed to allow axial shaft expansion caused by elevated temperatures or other conditions that lead to shaft movement.
- The RAKH expansion-series bearings are designed for use with the RAKH pillow blocks.
- RAKH units provide axial shaft location and the RAKHL allows shaft floatation.
- Due to limitations of the lubricant and seal material, the maximum operating temperature for the RAKHL units is 121° C (250° F).
- Units are supplied with self-locking collars.
- Steel S-ring ensures axial expansion.

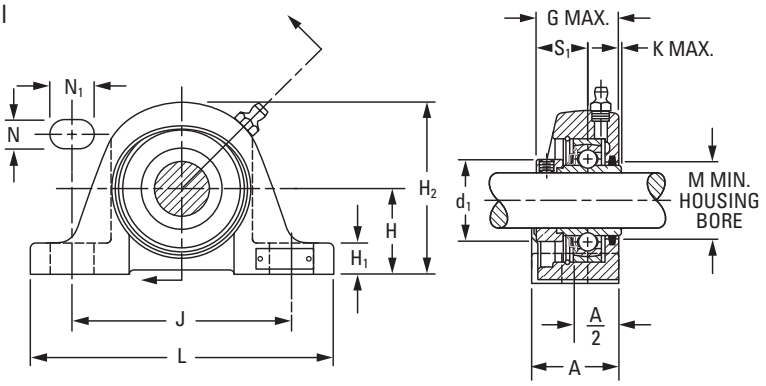

Suggested shaft tolerances:

13/16 in. – 1 15/16 in., nominal to -0.013 mm, -0.0005 in.;

2 in. – 2 15/16 in., nominal to -0.025 mm, -0.0010 in.

To order, specify UNIT and SHAFT DIAMETER.

Example: RAKHL 2 7/16 in.

BEARING DATA

Unit	Bearing No.	Dimensions and Load Ratings
RAKHL	KRS	Page A-43

Unit	Shaft Dia.	Total Float	H	H_2	G	J	L	A	H_1	N	N_1	K	d_1	S_1	M	Bolt Size	Bearing No.	Collar No.	Housing No.	Unit Wt.
	in.	mm in.	mm in	mm in.	mm in.	mm in.	mm in.	mm in.	mm in.	mm in.	mm in.	mm in.	mm in.	mm in.	mm in.	mm in.			New	kg lbs.
RAKHL	1 3/16	3.2 1/8	47.63 1 7/8	96.8 3 13/16	49.2 1 15/16	127.0 5	174.6 6 7/8	50.8 2	17.5 11/16	14.3 9/16	25.4 1	2.4 3/32	44.5 1 3/4	30.2 1 3/16	41.70 1 41/64	12 1/2	1103KRS	S1103K	A11414	2.182 4.81
RAKHL RAKHL	1 3/8 1 7/16	4.8 3/16	53.98 2 1/8	106.4 4 3/16	55.2 2 11/64	144.5 5 11/16	201.6 7 15/16	51.6 2 1/32	19.0 3/4	14.3 9/16	30.2 1 3/16	3.2 1/8	54.0 2 1/8	32.5 1 9/32	48.02 1 57/64	12 1/2	1106KRS 1107KRS	S1106K S1107K	A11199	2.912 6.42
RAKHL	1 15/16	6.4 1/4	63.50 2 1/2	129.4 5 3/32	65.1 2 9/16	171.4 6 3/4	241.3 9 1/2	63.5 2 1/2	22.2 7/8	17.5 11/16	36.5 1 7/16	4.0 5/32	69.8 2 3/4	38.1 1 1/2	63.90 2 33/64	16 5/8	1115KRS	S1115K	A11357	5.094 11.23
RAKHL	2 3/16	6.4 1/4	69.85 2 3/4	142.9 5 5/8	73.4 2 57/64	184.2 7 1/4	260.4 10 1/4	76.2 3	27.0 1 1/16	20.6 13/16	36.5 1 7/16	4.4 11/64	76.2 3	43.7 1 23/32	71.00 2 51/64	16 5/8	1203KRS	S1203K	A11358	6.722 14.82
RAKHL[1]	2 7/16	6.4 1/4	76.20 3	158.8 6 1/4	78.6 3 3/32	203.2 8	285.8 11 1/4	82.6 3 1/4	27.0 1 1/16	20.6 13/16	41.3 1 5/8	4.8 3/16	84.1 3 5/16	46.8 1 27/32	78.20 3 5/64	16 5/8	1207KRS	S1207K	–	8.210 18.10
RAKHL	2 15/16	6.4 1/4	88.90 3 1/2	181.0 7 1/4	113.5 3 15/32	228.6 9	330.2 13	88.9 3 1/2	31.8 1 1/4	23.8 15/16	50.8 2	8.7 11/32	101.6 4	54.8 2 5/32	118.70 3 43/64	20 3/4	1215KRS	S1215K	T-28261	11.785 25.98

[1]Special order.

YASM MEDIUM-DUTY SERIES SET SCREW LOCK

- Timken YASM medium-duty pillow blocks feature the GYM-KRRB bearing inserts.
- Timken YASM medium-duty pillow blocks are ideal for conveyer, fan and blower, sawmill, and feed and grain handling applications.
- The cast-iron housings are durable, powder-coated and maintain an excellent finish, while resisting corrosion, chemicals and weather exposure.
- These pillow blocks incorporate premium features designed to extend bearing life.

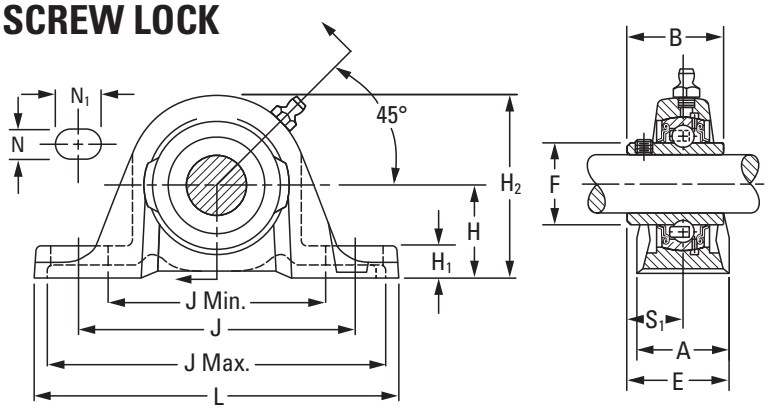

Suggested shaft tolerances:

1 in. – 1 15/16 in., nominal to -0.013 mm, -0.0005 in.;

2 in. – 3 in., nominal to -0.025 mm, -0.0010 in.

To order, specify UNIT and SHAFT DIAMETER.

Example: YASM 1 7/16 in.

BEARING DATA

Unit	Bearing No.	Dimensions and Load Ratings
YASM	GYM-KRRB	Page A-56

Unit	Shaft Dia.	H	H_2	B	L	J	J min.	J max.	A	H_1	F	N	N_1	S_1	E	Bolt Size	Bearing No.
	in.	mm in.	mm in.	mm in.	mm in.	mm in.	mm in.	mm in.	mm in.	mm in.	mm in.	mm in.	mm in.	mm in.	mm in.	mm in.	
YASM	1	42.86 1 11/16	83.30 3 9/32	38.10 1 1/2	157.2 6 3/16	117.5 4 5/8	93.70 3 11/16	141.30 5 9/16	39.70 1 9/16	16.70 21/32	40.31 1.587	14.22 9/16	23.88 15/16	22.20 7/8	42.070 1 21/32	12 1/2	GYM1100KRRB
YASM	1 3/16	47.62 1 7/8	93.60 3 11/16	42.90 1 11/16	166.7 6 9/16	130.2 5 1/8	105.60 4 5/32	154.80 6 3/32	45.20 1 25/32	18.30 23/32	48.84 1.844	14.22 9/16	24.64 31/32	25.40 1	48.020 1 57/64	12 1/2	GYM1103KRRB
YASM	1 7/16	53.98 2 1/8	104.80 4 1/8	49.20 1 15/16	179.4 7 1/16	136.5 5 3/8	110.30 4 11/32	162.70 6 13/16	47.60 1 7/8	23.00 29/32	52.27 2.058	14.22 9/16	26.16 1 1/32	30.20 1 3/16	53.980 2 1/8	12 1/2	GYM1107KRRB
YASM	1 1/2	53.98 2 1/8	106.30 4 3/16	49.20 1 15/16	191.3 7 17/32	149.2 5 7/8	120.70 4 3/4	177.80 7	50.80 2	19.10 3/4	57.92 2.280	14.22 9/16	28.45 1 1/8	30.20 1 3/16	55.560 2 3/16	12 1/2	GYM1108KRRB
YASM YASM	1 11/16 1 3/4	57.15 2 1/4	114.30 4 1/2	51.60 2 1/32	200.0 7 7/8	157.9 6 7/32	134.10 5 9/32	183.40 7 5/32	55.60 2 3/16	19.10 3/4	62.84 2.474	17.53 11/16	23.88 15/16	32.50 1 9/32	60.330 2 3/8	16 5/8	GYM1111KRRB GYM1112KRRB
YASM YASM	1 15/16 2	63.50 2 1/2	126.20 4 31/32	55.60 2 3/16	222.3 8 3/4	176.2 6 15/16	146.90 5 25/32	205.60 8 3/32	54.80 2 5/32	20.60 13/16	69.77 2.747	18.26 23/32	29.46 1 5/32	33.30 1 5/16	61.910 2 7/16	16 5/8	GYM1115KRRB GYM1200KRRB
YASM YASM	2 3/16 2 1/4	69.85 2 3/4	138.90 5 15/32	65.10 2 9/16	239.7 9 7/16	188.1 7 13/32	158.80 6 1/4	217.50 8 9/16	60.30 2 3/8	23.80 15/16	76.48 3.011	18.26 23/32	29.46 1 5/32	39.10 1 9/16	69.850 2 3/4	16 5/8	GYM1203KRRB GYM1204KRRB
YASM YASM	2 7/16 2 1/2	76.20 3	153.99 6 1/16	77.78 3 1/16	266.7 10 1/2	203.2 8	168.28 6 5/8	238.13 9 3/8	73.02 2 7/8	33.34 1 5/16	86.92 3.422	20.57 13/16	35.05 1 3/8	42.86 1 11/16	79.375 3 1/8	20 3/4	GYM1207KRRB GYM1208KRRB
YASM	2 11/16	88.90 3 1/2	177.80 7	93.66 3 11/16	330.2 13	228.6 9	177.80 7	279.40 11	88.90 3 1/2	31.75 1 1/4	91.90 3.618	23.88 15/16	50.08 2	44.45 1 3/4	93.660 3 11/16	20 3/4	GYM1211KRRB
YASM YASM	2 15/16 3	88.90 3 1/2	177.80 7	93.66 3 11/16	330.2 13	228.6 9	177.80 7	279.40 11	88.90 3 1/2	31.75 1 1/4	98.37 3.873	23.88 15/16	50.08 2	49.21 1 15/16	93.660 3 11/16	20 3/4	GYM1215KRRB GYM1300KRRB
YASM	3 7/16	101.60 4	209.55 8 1/4	96.04 3 25/32	381.0 15	282.58 11 1/8	222.25 8 3/4	342.90 13 1/2	111.10 4 3/8	33.34 1 15/16	111.92 4 13/32	23.81 15/16	60.33 2 3/8	56.36 2 7/32	111.919 4 13/32	20 3/4	GYM1307KRRB
YASM	3 15/16	127.00 5	254.00 10	117.48 4 5/8	431.8 17	336.55 13 1/4	276.23 10 7/8	396.90 15 5/8	114.30 4 1/2	33.34 1 15/16	131.37 5 11/64	28.58 1 1/8	63.50 2 1/2	68.26 2 11/16	125.413 4 15/16	24 1	GYM1315KRRB

STB SERIES

- STB two-bolt housed units come assembled and ready for mounting.
- These housed units are ideal for applications where space is limited, bolt screws are accessed from the bottom of the unit, loads are not severe and reversing moments do not occur.
- The units are assembled with GYA-RRB bearings with positive-contact, land-riding seals and set screw locking.
- The units are factory-prelubricated, but a grease fitting is provided for relubrication if required.

To order, specify UNIT and SHAFT DIAMETER.

Example: STB 1 in.

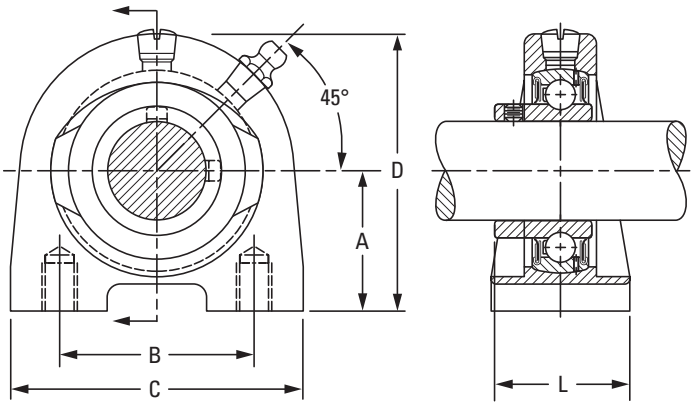

BEARING DATA

Unit	Bearing No.	Dimensions and Load Ratings
STB	GYA-RRB	Page A-54

Unit	Shaft Dia.	A	B	C	D	F	H	N	L	Bearing No.	Housing No.
	in. **mm**	**mm** in.	**mm** in.	**mm** in.	**mm** in.	**mm** in.	**mm** in.	**mm** in.	**mm** in.		
STB STB	3/4 **20**	**32.3** 1 5/16	**50.80** 2	**73.03** 2 7/8	**71.12** 2 13/32	**18.30** 23/32	**36.50** 1 7/16	**3/8-16**	**36.50** 1 7/16	GYA012RRB GYAE20RRB	T-90001
STB STB STB STB	7/8 15/16 1 **25**	**36.5** 1 7/16	**50.80** 2	**76.20** 3	**71.44** 2 13/16	**18.30** 23/32	**36.50** 1 7/16	**3/8-16**	**37.70** 1 31/64	GYA014RRB GYA015RRB GYA100RRB GYAE25RRB	T-39343
STB STB STB STB	1 1/8 1 3/16 1 1/4 S **30**	**42.9** 1 11/16	**76.20** 3	**101.60** 4	**82.60** 3 1/4	**19.05** 3/4	**38.10** 1 1/2	**7/16-14**	**42.07** 1 21/32	GYA102RRB GYA103RRB GYA103RRB2 GYAE30RRB	T-90003
STB STB STB STB	1 1/4 1 3/8 1 7/16 **35**	**47.6** 1 7/8	**82.60** 3 1/4	**107.95** 4 1/4	**93.66** 3 11/16	**22.23** 7/8	**44.45** 1 3/4	**1/2-13**	**48.02** 1 57/64	GYA104RRB GYA106RRB GYA107RRB3 GYAE35RRB	T-40256
STB STB	1 1/2 **40**	**49.2** 1 15/16	**88.90** 3 1/2	**117.48** 4 5/8	**100.01** 3 15/16	**23.81** 15/16	**47.63** 1 7/8	**1/2-13**	**51.20** 2 1/64	GYA108RRB GYAE40RRB	T-90005
STB STB STB STB	1 5/8 1 11/16 1 3/4 **45**	**54.0** 2 1/8	**95.25** 3 3/4	**127.00** 5	**107.95** 4 1/4	**25.40** 1	**50.80** 2	**1/2-13**	**53.98** 2 1/8	GYA110RRB GYA111RRB GYA112RRB GYAE45RRB	T-90008
STB STB STB	1 15/16 2 **50**	**57.2** 2 1/4	**101.60** 4	**139.70** 5 1/2	**114.30** 4 1/2	**25.40** 1	**50.80** 2	**5/8-11**	**56.36** 2 7/32	GYA115RRB GYA200RRB GYAE50RRB	T-90010

NOTE: Shaft diameter with an S = smaller housing.

VTB SERIES

- VTB two-bolt housed units are nearly identical to the STB unit, except they are assembled with the GRA-RRB bearings and positive-contact R-seals and locking collar.

To order, specify UNIT and SHAFT DIAMETER.

Example: VTB 1 in.

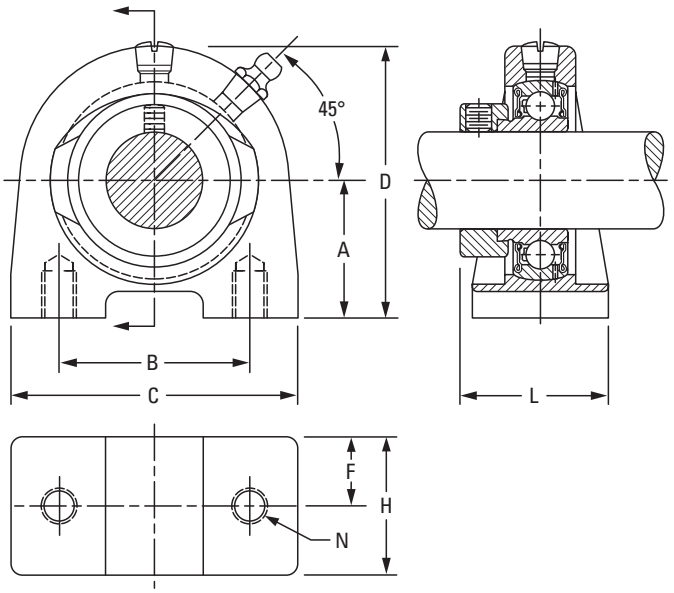

BEARING DATA

Unit	Bearing No.	Dimensions and Load Ratings
VTB	GRA-RRB	Page A-50

Unit	Shaft Dia.	A	B	C	D	F	H	N	L	Bearing No.	Collar No.	Housing No.
	in. **mm**	**mm** in.	**mm** in.	**mm** in.	**mm** in.	**mm** in.	**mm** in.	**mm** in.	**mm** in.			
VTB	3/4	**32.3**	**50.80**	**73.03**	**71.12**	**18.30**	**36.50**	3/8-16	**41.67**	GRA012RRB	S1012K	T-90001
VTB	**20**	1 5/16	2	2 7/8	2 13/32	23/32	1 7/16		1 41/64	GRAE20RRB	SE20K	
VTB	7/8									GRA014RRB	S1014K	
VTB	15/16	**36.5**	**50.80**	**76.20**	**71.44**	**18.30**	**36.50**	3/8-16	**41.67**	GRA015RRB	S1015K	T-39343
VTB	1	1 7/16	2	3	2 13/16	23/32	1 7/16		1 41/64	GRA100RRB	S1100K C2	
VTB	**25**									GRAE25RRB	SE25K	
VTB	1 1/8									GRA102RRB	S1102K	
VTB	1 3/16	**42.9**	**76.20**	**101.60**	**82.60**	**19.05**	**38.10**	7/16-14	**45.64**	GRA103RRB	S1103K	T-90003
VTB	1 1/4 S	1 11/16	3	4	3 1/4	3/4	1 1/2		1 51/64	GRA103RRB2	S1103K3	
VTB	**30**									GRAE30RRB	SE30K	
VTB	1 1/4									GRA104RRB	S1104K C1	
VTB	13/8	**47.6**	**82.60**	**107.95**	**93.66**	**22.23**	**44.45**	1/2-13	**51.60**	GRA106RRB	S1106K C1	T-40256
VTB	1 7/16	1 7/8	3 1/4	4 1/4	3 11/16	7/8	1 3/4		2 1/32	GRA107RRB3	S1107K C1	
VTB	**35**									GRAE35RRB	SE35K	
VTB	1 1/2	**49.2**	**88.90**	**117.48**	**100.01**	**23.81**	**47.63**	1/2-13	**56.36**	GRA108RRB	S1108KT	T-90005
VTB	**40**	1 15/16	3 1/2	4 5/8	3 15/16	15/16	1 7/8		2 7/32	GRAE40RRB	SE40K	
VTB	1 5/8									GRA110RRB	S1110K	
VTB	1 11/16	**54.0**	**95.25**	**127.00**	**107.95**	**25.40**	**50.80**	1/2-13	**57.94**	GRA111RRB	S1111K	T-90008
VTB	1 3/4	2 1/8	3 3/4	5	4 1/4	1	2		2 9/32	GRA112RRB	S1112K	
VTB	**45**									GRAE45RRB	SE45K	
VTB	1 15/16									GRA115RRB	S1115K	
VTB	2 S	**57.2**	**101.60**	**139.70**	**114.30**	**25.40**	**50.80**	5/8-11	**57.94**	GRA200RRB	S1115K2	T-90010
VTB	**50**	2 1/4	4	5 1/2	4 1/2	1	2		2 9/32	GRAE50RRB	SE50K	

NOTE: Shaft diameter with an S = smaller housing.

RAO, LAO HEAVY SERIES

- This is a compact, economic, heavy-duty ball bearing housed unit.
- This series incorporates the tested and proven features of the Timken standard RAK-series pillow block.
- RAO-series bearings are equipped to handle heavy capacity.
- LAO-series bearings are equipped with heavy-series GN-KLLB wide-inner-ring ball bearings.
- The units are supplied with a self-locking collar that eliminates shaft shoulders, machining adapters and sleeves, and locknuts that provide easy mounting.

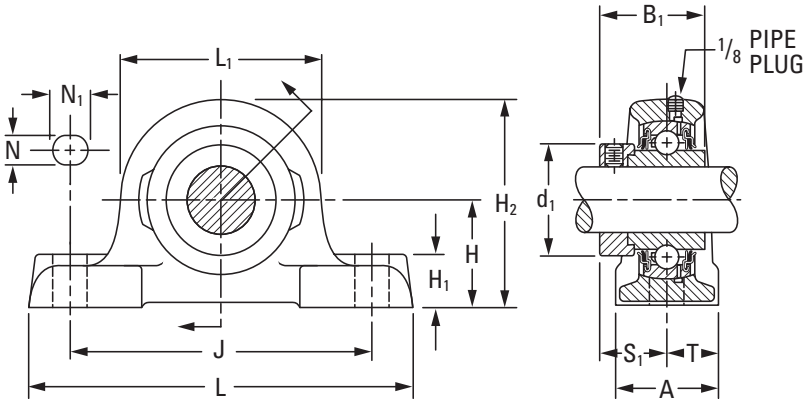

Suggested shaft tolerances:

1 3/16 in. – 1 15/16 in., nominal to -0.013 mm, -0.0005 in.;

2 in. – 2 15/16 in., nominal to -0.025 mm, -0.0010 in.

To order, specify UNIT and SHAFT DIAMETER.

Example: RAO 1 7/16 in.

BEARING DATA

Unit	Bearing No.	Dimensions and Load Ratings
RAO	GN-KRRB	Page A-57
LAO	GN-KLLB	Page A-59

Unit[1]	Shaft Dia.	H	H_2	B_1	L_1	J	L	A	H_1	N	N_1	d_1	S_1	T	Bolt Size	Bearing No.	Collar No.	Housing No.	Unit Wt.
	in.	mm in	mm in.	mm in.	mm in.	mm in.	mm in.	mm in.	mm in.	mm in.	mm in.	mm in.	mm in.	mm in.	mm in.			New	kg lbs.
RAO	1 3/16	**47.63** 1 7/8	**93.7** 3 11/16	**50.0** 1 31/32	**90.5** 3 9/16	**136.5** 5 3/8	**173.0** 6 13/16	**49.2** 1 15/16	**22.2** 7/8	**15.9** 5/8	**19.0** 3/4	**49.2** 1 15/16	**32.5** 1 9/32	**24.6** 31/32	**12** 1/2	GN103KRRB	SN103K	T-18798	**1.898** 4.18
RAO	1 7/16	**53.98** 2 1/8	**104.0** 4 3/32	**51.6** 2 1/32	**101.6** 4	**152.4** 6	**192.1** 7 9/16	**54.0** 2 1/8	**23.8** 15/16	**15.9** 5/8	**19.0** 3/4	**55.6** 2 3/16	**33.3** 1 5/16	**27.0** 1 1/16	**12** 1/2	GN107KRRB	SN107K	T-18626	**2.406** 5.30
RAO	1 1/2	**60.33** 2 3/8	**117.5** 4 5/8	**57.2** 2 1/4	**114.3** 4 1/2	**171.4** 6 3/4	**215.9** 8 1/2	**60.3** 2 3/8	**27.0** 1 1/16	**19.0** 3/4	**25.4** 1	**63.5** 2 1/2	**37.3** 1 15/32	**30.2** 1 3/16	**16** 5/8	GN108KRRB	SN108K	T-18800	**3.755** 8.27
RAO	1 11/16	**66.68** 2 5/8	**130.2** 5 1/8	**58.7** 2 5/16	**127.0** 5	**190.5** 7 1/2	**239.7** 9 7/16	**66.7** 2 5/8	**30.2** 1 3/16	**19.0** 3/4	**25.4** 1	**69.8** 2 3/4	**38.9** 1 17/32	**33.3** 1 5/16	**16** 5/8	GN111KRRB	SN111K	T-18802	**5.030** 11.08
RAO	1 15/16	**71.44** 2 13/16	**141.3** 5 9/16	**66.7** 2 5/8	**138.1** 5 7/16	**209.6** 8 1/4	**265.1** 10 7/16	**73.0** 2 7/8	**33.3** 1 5/16	**19.0** 3/4	**25.4** 1	**76.2** 3	**42.1** 1 21/32	**36.5** 1 7/16	**16** 5/8	GN115KRRB	SN115K	T-18804	**6.265** 13.80
RAO	2 3/16	**77.79** 3 1/16	**153.2** 6 1/32	**73.0** 2 7/8	**150.8** 5 15/16	**228.6** 9	**287.3** 11 5/16	**79.4** 3 1/8	**36.5** 1 7/16	**22.2** 7/8	**28.6** 1 1/8	**82.6** 3 1/4	**45.2** 1 25/32	**39.7** 1 9/16	**20** 3/4	GN203KRRB	SN203K	T-18806	**7.940** 17.49
RAO	2 7/16	**84.14** 3 5/16	**165.9** 6 17/32	**79.4** 3 1/8	**163.5** 6 7/16	**247.6** 9 3/4	**312.7** 12 5/16	**84.1** 3 5/16	**38.1** 1 1/2	**22.2** 7/8	**28.6** 1 1/8	**88.9** 3 1/2	**48.4** 1 29/32	**42.1** 1 21/32	**20** 3/4	GN207KRRB	SN207K	T-18808	**9.761** 21.50
RAO	2 11/16	**96.84** 3 13/16	**192.1** 7 9/16	**88.9** 3 1/2	**188.9** 7 7/16	**285.8** 11 1/4	**360.4** 14 3/16	**96.0** 3 13/16	**44.4** 1 3/4	**25.4** 1	**33.3** 1 5/16	**101.6** 4	**54.8** 2 5/32	**48.4** 1 29/32	**22** 7/8	GN211KRRB	SO211K	T-18810	**15.322** 33.75
RAO	2 15/16	**104.78** 4 1/8	**204.8** 8 1/16	**100.0** 3 15/16	**201.6** 7 15/16	**304.8** 12	**384.2** 15 1/8	**103.2** 4 1/16	**47.6** 1 7/8	**25.4** 1	**33.3** 1 5/16	**112.7** 4 7/16	**62.7** 2 15/32	**51.6** 2 1/32	**22** 7/8	GN215KRRB	SN215K	T-18601	**18.205** 40.10

[1]LAO assembled with GN-KLLB bearing.

RSA, LSA INDUSTRIAL SERIES

- RSA series is equipped with G-KRRB wide inner ring ball bearings.
- LSA series is equipped with G-KLLB wide inner ring bearings.
- Pillow blocks are prelubricated and ready for immediate use.
- A grease fitting is provided for relubrication if required.
- All units are supplied with a self-locking collar.

Suggested shaft tolerances:

1/2 in. – 1 15/16 in.,
nominal to -0.013 mm, -0.0005 in.;
2 in. – 3 15/16 in.,
nominal to -0.025 mm, -0.0010 in.

To order, specify UNIT and SHAFT DIAMETER.

Example: RSA 1 7/16 in.

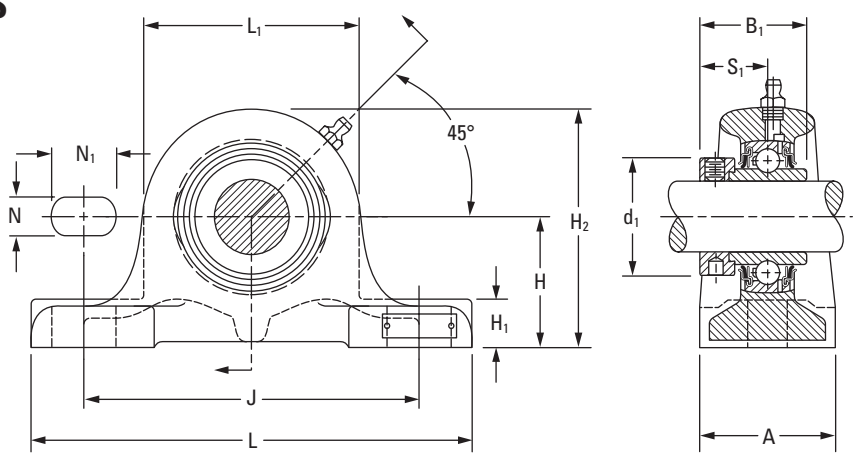

BEARING DATA

Unit	Bearing No.	Dimensions and Load Ratings
RSA	G-KRRB	Page A-34
LSA	G-KLLB	Page A-37

Unit	Shaft Dia.	H	H_2	B_1	L_1	J	L	A	H_1	N	N_1	d_1	S_1	Bolt Size	Bearing No.	Collar No.	Housing No.	Unit Wt.
	in. **mm**	**mm** in.	**mm** in.	**mm** in.	**mm** in.	**mm** in.	**mm** in.	**mm** in.	**mm** in.	**mm** in.	**mm** in.	**mm** in.	**mm** in.	**mm** in.			New	**kg** lbs.
RSA	1/2														G1008KRRB	S1008K		
RSA	5/8	**31.75**	**58.7**	**37.3**	**54.0**	**96.8**	**122.2**	**31.8**	**12.7**	**11.1**	**14.3**	**30.2**	**23.4**	**10**	G1010KRRB	S1010K	T-22784	**0.681**
RSA	11/16	1 1/4	2 5/16	1 15/32	2 1/8	3 13/16	4 13/16	1 1/4	1/2	7/16	9/16	1 3/16	59/64	3/8	G1011KRRB	S1011K		1.50
RSA	**17**														GE17KRRB	SE17K		
RSA	3/4	**44.45**	**76.2**	**43.7**	**63.5**	**127.0**	**165.1**	**50.8**	**14.3**	**14.3**	**19.0**	**33.3**	**26.6**	**12**	G1012KRRB	S1012K	T-22741	**1.226**
RSA	**20**	1 3/4	3	1 23/32	2 1/2	5	6 1/2	2	9/16	9/16	3/4	1 5/16	1 3/64	1/2	GE20KRRB	SE20K		2.70
RSA	7/8														G1014KRRB	S1014K		
RSA	15/16	**50.80**	**85.7**	**44.4**	**69.8**	**139.7**	**177.8**	**54.0**	**15.9**	**14.3**	**19.0**	**38.1**	**27.0**	**12**	G1015KRRB	S1015K	T-22716	**1.521**
RSA	1	2	3 3/8	1 3/4	2 3/4	5 1/2	7	2 1/8	5/8	9/16	3/4	1 1/2	1 1/16	1/2	G1100KRRB	S1100K		3.35
RSA	**25**														GE25KRRB	SE25K		
RSA	1 1/16														G1101KRRB	S1101K		
RSA	1 1/8	**50.80**	**91.3**	**48.4**	**81.0**	**139.7**	**177.8**	**54.0**	**17.5**	**15.9**	**20.6**	**44.1**	**30.2**	**12**	G1102KRRB	S1102K	T-22725	**1.789**
RSA, LSA	1 3/16	2	3 19/32	1 29/32	3 3/16	5 1/2	7	2 1/8	11/16	5/8	13/16	1 47/64	1 3/16	1/2	G1103KRRB	S1103K		3.94
RSA	**30**														GE30KRRB	SE30K		
RSA, LSA	1 1/4														G1104KRRB	S1104K		
RSA	1 5/16														G1105KRRB	S1105K		
RSA	1 3/8	**60.33**	**111.1**	**51.2**	**101.6**	**158.8**	**209.6**	**66.7**	**22.2**	**19.0**	**31.8**	**54.0**	**32.5**	**16**	G1106KRRB	S1106K	T-22382	**3.260**
RSA, LSA	1 7/16	2 3/8	4 3/8	2 1/64	4	6 1/4	8 1/4	2 5/8	7/8	3/4	1 1/4	2 1/8	1 9/32	5/8	G1107KRRB	S1107K		7.18
RSA	**35**														GE35KRRB	SE35K		
RSA	1 1/2														G1108KRRB	S1108KT		
RSA	1 9/16	**60.33**	**111.1**	**56.4**	**101.6**	**168.3**	**209.6**	**60.3**	**19.0**	**19.0**	**22.2**	**60.3**	**34.9**	**16**	G1109KRRB	S1109KT	T-22752	**2.928**
RSA	**40**	2 3/8	4 3/8	2 7/32	4	6 5/8	8 1/4	2 3/8	3/4	3/4	7/8	2 3/8	1 3/8	5/8	GE40KRRB	SE40K		6.45

Continued on next page.

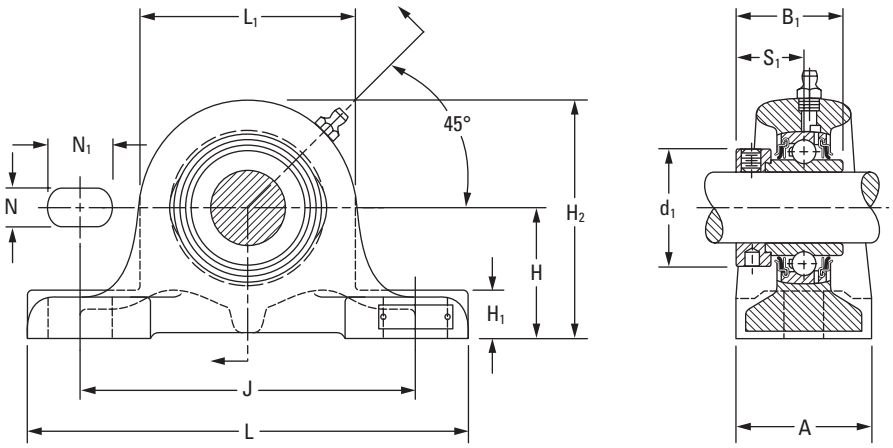

Continued from previous page.

Unit	Shaft Dia.	H	H_2	B_1	L_1	J	L	A	H_1	N	N_1	d_1	S_1	Bolt Size	Bearing No.	Collar No.	Housing No.	Unit Wt.
	in. **mm**	**mm** in.	**mm** in.	**mm** in.	**mm** in.	**mm** in.	**mm** in.	**mm** in.	**mm** in.	**mm** in.	**mm** in.	**mm** in.	**mm** in.	**mm** in.			New	**kg** lbs.
RSA	1 5/8														G1110KRRB	S1110K		
RSA, LSA	1 11/16	**60.33**	**114.3**	**56.4**	**108.0**	**168.3**	**209.6**	**60.3**	**20.6**	**19.0**	**23.8**	**63.5**	**34.9**	**16**	G1111KRRB	S1111K	T-22701	**3.064**
RSA	1 3/4	2 3/8	4 1/2	2 7/32	4 1/4	6 5/8	8 1/4	2 3/8	13/16	3/4	15/16	2 1/2	1 3/8	5/8	G1112KRRB	S1112K		6.75
RSA	**45**														GE45KRRB	SE45K		
RSA	1 7/8														G1114KRRB	S1114K		
RSA, LSA	1 15/16	**69.85**	**130.2**	**62.7**	**120.6**	**209.6**	**269.9**	**69.8**	**26.2**	**19.0**	**34.9**	**69.8**	**38.1**	**16**	G1115KRRB	S1115K	T-22384	**4.885**
RSA	**50**	2 3/4	5 1/8	2 15/32	4 3/4	8 1/4	10 5/8	2 3/4	1 1/32	3/4	1 3/8	2 3/4	1 1/2	5/8	GE50KRRB	SE50K		10.76
RSA	2														G1200KRRB	S1200K		
RSA	2 1/8	**79.38**	**142.1**	**71.4**	**125.4**	**228.6**	**288.9**	**79.4**	**25.4**	**19.0**	**33.3**	**76.2**	**43.7**	**16**	G1202KRRB	S1202K	T-22696	**6.022**
RSA, LSA	2 3/16	3 1/8	5 19/32	2 13/16	4 15/16	9	11 3/8	3 1/8	1	3/4	1 5/16	3	1 23/32	5/8	G1203KRRB	S1203K		13.22
RSA	**55**														GE55KRRB	SE55K		
RSA	2 1/4														G1204KRRB	S1204K		
RSA	2 3/8	**79.38**	**149.2**	**77.8**	**139.7**	**228.6**	**288.9**	**79.4**	**28.6**	**22.2**	**28.6**	**84.1**	**46.8**	**20**	G1206KRRB	S1206K	T-22743	**6.901**
RSA, LSA	2 7/16	3 1/8	5 7/8	3 1/16	5 1/2	9	11 3/8	3 1/8	1 1/8	7/8	1 1/8	3 5/16	1 27/32	3/4	G1207KRRB	S1207K		15.20
RSA	**60**														GE60KRRB	SE60K		
RSA	2 11/16	**95.25**	**173.0**	**82.6**	**155.6**	**260.4**	**320.7**	**88.9**	**33.3**	**22.2**	**34.9**	**96.8**	**45.2**	**20**	G1211KRRB	S1211KT	T-22748	**9.997**
RSA	**70**	3 3/4	6 13/16	3 1/4	6 1/8	10 1/4	12 5/8	3 1/2	1 5/16	7/8	1 3/8	3 13/16	1 25/32	3/4	GE70KRRB	SE70K		22.02
RSA	2 15/16	**95.25**	**177.8**	**92.1**	**196.1**	**206.4**	**320.7**	**88.9**	**38.1**	**22.2**	**31.8**	**101.6**	**54.8**	**20**	G1215KRRB	S1215K	T-22386	**10.683**
RSA	**75**	3 3/4	7	3 5/8	7 23/32	10 1/4	12 5/8	3 1/2	1 1/2	7/8	1 1/4	4	2 5/32	3/4	GE75KRRB	SE75K		23.53

RSAO, LSAO HEAVY SERIES

- RSAO pillow blocks are equipped with GN-KRRB wide-inner-ring ball bearings.
- LSAO pillow blocks are equipped with GN-KLLB wide-inner-ring ball bearings.
- All units are suited for installations where the load is heavy in proportion to the shaft diameter or where considerable shock loads exist.
- All units are for use in wet or extremely dirty conditions.
- These units are prelubricated and ready for immediate use. A grease fitting is also provided for relubrication if required.
- All units are supplied with a self-locking collar.

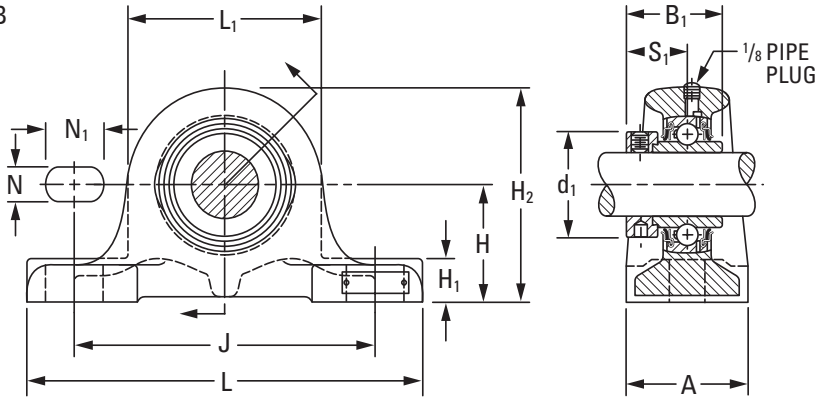

Suggested shaft tolerances:

1 1/16 in., nominal to -0.013 mm, -0.0005 in.;

2 in. – 3 15/16 in., nominal to -0.025 mm, -0.0010 in.

To order, specify UNIT and SHAFT DIAMETER.

Example: RSAO 1 7/16 in.

BEARING DATA

Unit	Bearing No.	Dimensions and Load Ratings
RSAO	GN-KRRB	Page A-57
LSAO	GN-KLLB	Page A-59

Unit	Shaft Dia.	H	H_2	B_1	L_1	J	L	A	H_1	N	N_1	d_1	S_1	Bolt Size	Bearing No.		Collar No.	Housing No.	Unit Wt.
	in.	mm in.	mm in.	mm in.	mm in.	mm in.	mm in.	mm in.	mm in.	mm in.	mm in.	mm in.	mm in.	mm in.	RSAO	LSAO		New	kg lbs.
RSAO, LSAO	1 3/16	**60.33** 2 3/8	**108.0** 4 1/4	**50.0** 1 31/32	**95.2** 3 3/4	**168.3** 6 5/8	**209.6** 8 1/4	**60.3** 2 3/8	**22.2** 7/8	**15.9** 5/8	**25.4** 1	**48.7** 1.918	**32.5** 1.280	**12** 1/2	GN103KRRB	(KLLB)	SN103K	T-22678	**2.937** 6.47
RSAO, LSAO	1 7/16	**69.85** 2 3/4	**122.2** 4 13/16	**51.6** 2 1/32	**104.8** 4 1/8	**209.6** 8 1/4	**269.9** 10 5/8	**69.8** 2 3/4	**23.8** 15/16	**19.0** 3/4	**28.6** 1 1/8	**55.1** 2.168	**33.3** 1 5/16	**16** 5/8	GN107KRRB	(KLLB)	SN107K	T-22496	**4.154** 9.15
RSAO, LSAO	1 1/2	**79.38** 3 1/8	**136.6** 5 3/8	**57.2** 2 1/4	**114.3** 4 1/2	**228.6** 9	**288.9** 11 3/8	**79.4** 3 1/8	**27.0** 1 1/16	**19.0** 3/4	**28.6** 1 1/8	**63.0** 2.480	**37.3** 1 15/32	**16** 5/8	GN108KRRB	(KLLB)	SN108K	T-22672	**5.857** 12.90
RSAO, LSAO RSAO	1 11/16 1 3/4	**79.38** 3 1/8	**142.9** 5 5/8	**58.7** 2 5/16	**127.0** 5	**228.6** 9	**288.9** 11 3/8	**79.4** 3 1/8	**30.2** 1 3/16	**19.0** 3/4	**28.6** 1 1/8	**69.3** 2.730	**38.9** 1 17/32	**16** 5/8	GN111KRRB GN112KRRB	(KLLB) –	SN111K SN112K	T-22498 –	**6.560** 14.45
RSAO, LSAO	1 15/16	**79.38** 3 1/8	**148.4** 5 27/32	**66.7** 2 5/8	**138.1** 5 7/16	**228.6** 9	**288.9** 11 3/8	**79.4** 3 1/8	**33.3** 1 5/16	**19.0** 3/4	**28.6** 1 1/8	**75.7** 2.980	**42.1** 1 21/32	**16** 5/8	GN115KRRB	(KLLB)	SN115K	T-22502	**7.246** 15.96
RSAO RSAO, LSAO	2 2 3/16	**95.25** 3 3/4	**170.7** 6 23/32	**73.0** 2 7/8	**150.8** 5 15/16	**260.4** 10 1/4	**320.7** 12 5/8	**88.9** 3 1/2	**36.5** 1 7/16	**22.2** 7/8	**34.9** 1 3/8	**82.0** 3.230	**45.2** 1 25/32	**20** 3/4	GN200KRRB GN203KRRB	– (KLLB)	SN200K SN203K	T-22500 –	**10.192** 22.45
RSAO, LSAO	2 7/16	**104.78** 4 1/8	**186.5** 7 11/32	**79.4** 3 1/8	**163.5** 6 7/16	**285.8** 11 1/4	**349.2** 13 3/4	**101.6** 4	**38.1** 1 1/2	**22.2** 7/8	**34.9** 1 3/8	**88.4** 3.480	**48.4** 1 29/32	**20** 3/4	GN207KRRB	(KLLB)	SN207K	T-22494	**16.144** 35.56
RSAO, LSAO	2 11/16	**115.89** 4 9/16	**210.3** 8 9/32	**88.9** 3 1/2	**188.9** 7 7/16	**304.8** 12	**390.5** 15 3/8	**111.1** 4 3/8	**44.4** 1 3/4	**25.4** 1	**34.9** 1 3/8	**101.1** 3.980	**54.8** 2 5/32	**22** 7/8	GN211KRRB	(KLLB)	SO211K	T-22492	**19.295** 42.50
RSAO, LSAO	2 15/16	**115.89** 4 9/16	**217.5** 8 9/16	**100.0** 3 15/16	**203.2** 8	**314.3** 12 3/8	**390.5** 15 3/8	**111.1** 4 3/8	**47.6** 1 7/8	**25.4** 1	**34.9** 1 3/8	**112.2** 4.418	**62.7** 2 15/32	**22** 7/8	GN215KRRB	(KLLB)	SN215K	T-22490	**20.090** 44.25
RSAO	3 3/16	**115.89** 4 9/16	**223.0** 8 25/32	**106.4** 4 3/16	**214.3** 8 7/16	**314.3** 12 3/8	**390.5** 15 3/8	**111.1** 4 3/8	**49.2** 1 15/16	**25.4** 1	**44.4** 1 3/4	**119.1** 4.688	**65.9** 2 19/32	**22** 7/8	GN303KRRB	–	SN303K	T-22444	**22.814** 50.25
RSAO	3 7/16	**130.18** 5 1/8	**250.8** 9 7/8	**115.9** 4 9/16	**241.3** 9 1/2	**339.7** 13 3/8	**409.6** 16 1/8	**120.6** 4 3/4	**57.2** 2 1/4	**28.6** 1 1/8	**54.0** 2 1/8	**133.4** 5.250	**73.8** 2 29/32	**24** 1	GN307KRRB	–	SN307K	T-22446	**30.986** 68.25
RSAO	3 15/16	**144.46** 5 11/16	**281.0** 11 1/16	**128.6** 5 1/16	**273.0** 10 3/4	**374.6** 14 3/4	**439.7** 17 5/16	**130.2** 5 1/8	**65.1** 2 9/16	**28.6** 1 1/8	**44.4** 1 3/4	**146.0** 5.750	**78.6** 3 3/32	**24** 1	GN315KRRB	–	SN315K	T-22448	**40.633** 89.50

SAL INDUSTRIAL SERIES, FIXED AND FLOATING TYPES

- These types are designed for applications where normal to high temperatures are encountered and applications where one or more floating bearing units are required.
- The floating unit allows the bearing to move axially as the shaft expands from rising temperatures. The fixed unit maintains shaft location.
- The bearings have a loose internal fit.
- The SAL unit is equipped with a self-aligning SM wide-inner-ring bearing and a self-locking collar.
- The external aligning ring is fitted to the spherical surface of the outer ring.
- These types are equipped with oil-tight seals. They're normally fitted for oil lubrication, but they can be equipped for grease lubrication when specified.
- Before installation, lubricate with high-grade automotive oil, turbine oil or ball-bearing grease.
- The units are assembled with a spacer ring (fixed type). By removing the spacer ring, the assembly becomes a floating unit.

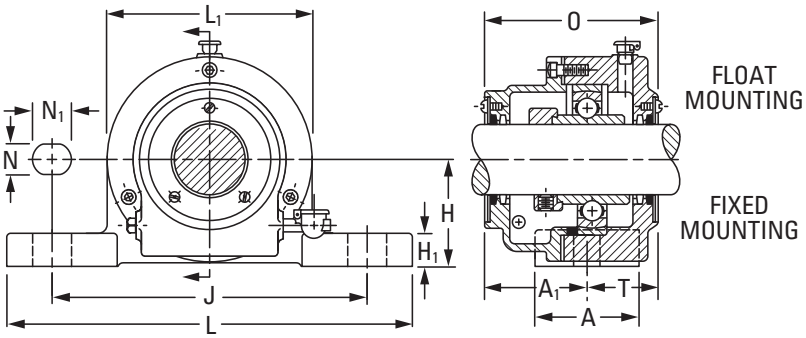

Suggested shaft tolerances:

1 3/16 in. – 1 15/16 in., nominal to -0.013 mm, -0.0005 in.;
2 in. – 3 7/16 in., nominal to -0.025 mm, -0.0010 in.

To order, specify UNIT and SHAFT DIAMETER and whether fixed or floating.

Example: SAL 1 7/16 in. (one fixed, one floating).

BEARING DATA

Unit	Bearing No.	Dimensions and Load Ratings
SAL	SM-KS	Page A-43

Unit	Shaft Dia.	Total Float	H	O	L_1	A	J	L	N	N_1	H_1	A_1	T	Bolt Size	Bearing No.	Collar No.	Housing No.	Unit Wt.
	in.	mm in.	mm in	mm in.	mm in.	mm in.	mm in.	mm in.	mm in.	mm in.	mm in.	mm in.	mm in.	mm in.			New	kg lbs.
SAL	1 3/16	6.4 1/4	50.80 2	97.6 3 27/32	96.8 3 13/16	54.0 2 1/8	139.7 5 1/2	177.8 7	15.9 5/8	19.0 3/4	17.5 11/16	56.4 2 7/32	41.3 1 5/8	12 1/2	SM1103KS	S1103K	T-12127	3.768 8.30
SAL	1 1/4	6.4 1/4	60.33 2 3/8	104.8 4 1/8	108.0 4 1/4	60.3 2 3/8	158.8 6 1/4	210.0 8 1/4	19.0 3/4	25.4 1	19.0 3/4	62.7 2 15/32	42.1 1 21/32	16 5/8	SM1104KS	S1104K	T-13108	5.239 11.54
SAL	1 7/16	6.4 1/4	60.33 2 3/8	104.8 4 1/8	108.0 4 1/4	60.3 2 3/8	158.8 6 1/4	210.0 8 1/4	19.0 3/4	25.4 1	19.0 3/4	62.7 2 15/32	42.1 1 21/32	16 5/8	SM1107KS	S1107K	T-13108	5.239 11.54
SAL	1 1/2	7.9 5/16	60.33 2 3/8	108.0 4 1/4	120.6 4 3/4	60.3 2 3/8	168.3 6 5/8	210.0 8 1/4	19.0 3/4	25.4 1	19.0 3/4	63.5 2 1/2	44.4 1 3/4	16 5/8	SM1108KTS	S1108KT	T-12121	6.143 13.53
SAL	1 11/16	7.9 5/16	60.33 2 3/8	110.3 4 11/32	120.6 4 3/4	60.3 2 3/8	168.3 6 5/8	210.0 8 1/4	19.0 3/4	25.4 1	19.0 3/4	65.9 2 19/32	44.4 1 3/4	16 5/8	SM1111KS	S1111K	T-12121	5.866 12.92
SAL	1 15/16	7.9 5/16	69.85 2 3/4	116.7 4 19/32	133.4 5 1/4	69.8 2 3/4	210.0 8 1/4	269.9 10 5/8	19.0 3/4	25.4 1	22.2 7/8	69.1 2 23/32	47.6 1 7/8	16 5/8	SM1115KS	S1115K	T-12313	8.113 17.87
SAL	2 3/16	7.9 5/16	79.38 3 1/8	137.3 5 13/32	146.0 5 3/4	79.4 3 1/8	228.6 9	288.9 11 3/8	19.0 3/4	25.4 1	22.2 7/8	79.4 3 1/8	57.9 2 9/32	16 5/8	SM1203KS	S1203K	A-5845	10.978 24.18
SAL	2 7/16	9.5 3/8	79.38 3 1/8	150.0 5 29/32	158.8 6 1/4	79.4 3 1/8	228.6 9	288.9 11 3/8	19.0 3/4	25.4 1	22.2 7/8	88.9 3 1/2	61.1 2 13/32	16 5/8	SM1207KS	S1207K	A-5083	12.894 28.40
SAL	2 11/16	7.1 9/32	95.25 3 3/4	156.4 6 5/32	171.4 6 3/4	88.9 3 1/2	259.7 10 1/4	320.7 12 5/8	22.2 7/8	28.6 1 1/8	27.0 1 1/16	92.1 3 5/8	64.3 2 17/32	20 3/4	SM1211KTS	S1211K	T-18940	15.889 35.02
SAL	2 15/16	9.9 25/64	95.25 3 3/4	173.8 6 27/32	190.5 7 1/2	88.9 3 1/2	259.7 10 1/4	320.7 12 5/8	22.2 7/8	28.6 1 1/8	27.0 1 1/16	100.8 3 31/32	73.0 2 7/8	20 3/4	SM1215KS	S1215K	A-5088	20.203 44.50
SAL	3 7/16	9.5 3/8	115.89 4 9/16	186.5 7 11/32	212.7 8 3/8	111.1 4 3/8	314.3 12 3/8	390.6 15 3/8	25.4 1	31.8 1 1/4	31.8 1 1/4	107.2 4 7/32	79.4 3 1/8	22 7/8	SM1307KS	S1307K	A-5206	33.482 73.75

SAOL HEAVY SERIES, FIXED AND FLOATING TYPES

- These types are designed for applications with higher- than-usual temperatures or where one or more floating bearing units are required.
- The floating unit allows the bearing to move axially as the shaft expands from rising temperatures. The fixed unit maintains shaft location.
- The bearings have a loose internal fit.
- The SAOL unit is equipped with a self-aligning SMN wide-inner-ring ball bearing and a self-locking collar.
- The external aligning ring is fitted to the spherical surface of the outer ring.
- These types are equipped with oil-type seals. They're normally fitted for oil lubrication, but they can be equipped for grease lubrication when specified.
- Before installation, lubricate with high-grade automotive oil, turbine oil or ball-bearing grease.
- The units are assembled with a spacer ring (fixed type). By removing the spacer ring, the assembly becomes a floating unit.

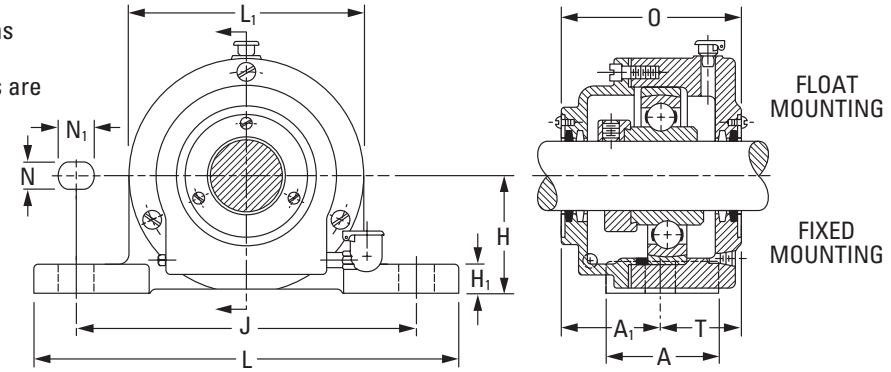

Suggested shaft tolerances:

1 3/16 in. – 1 15/16 in., nominal to -0.013 mm, -0.0005 in.;
2 in. – 3 15/16 in., nominal to -0.025 mm, -0.0010 in.
Larger sizes, consult your Timken engineer.

To order, specify UNIT and SHAFT DIAMETER and whether fixed or floating.

Example: SAOL 1 7/16 in. (one fixed, one floating).

BEARING DATA

Unit	Bearing No.	Dimensions and Load Ratings
SAOL	SMN-KS	Page A-62

Unit	Shaft Dia.	Total Float	H	O	L_1	A	J	L	N	N_1	H_1	A_1	T	J_1[1]	Bolt No.	Bolt Size	Bearing No.	Collar No.	Housing No.	Unit Wt.
	in.	mm in	mm in	mm in.	mm in.	mm in.	mm in.	mm in.	mm in.	mm in.	mm in.	mm in.	mm in.	mm in.		mm in.			New	kg lbs.
SAOL	1 3/16	7.9 5/16	60.33 2 3/8	103.2 4 1/16	111.1 4 3/8	60.3 2 3/8	168.3 6 5/8	210.0 8 1/4	15.9 5/8	22.2 7/8	17.5 11/16	60.3 2 3/8	42.9 1 11/16	–	2	12 1/2	SMN103KS	SN103K	T-12389	5.521 12.16
SAOL	1 7/16	9.1 23/64	69.80 2 3/4	111.1 4 3/8	120.6 4 3/4	69.8 2 3/4	209.6 8 1/4	269.9 10 5/8	19.0 3/4	25.4 1	20.6 13/16	69.1 2 23/32	42.1 1 21/32	–	2	16 5/8	SMN107KS	SN107K	A-4779	7.037 15.50
SAOL	1 1/2	9.5 3/8	79.40 3 1/8	123.8 4 7/8	146.0 5 3/4	79.4 3 1/8	228.6 9	288.9 11 3/8	19.0 3/4	25.4 1	20.6 13/16	74.6 2 15/16	49.2 1 15/16	–	2	16 5/8	SMN108KS	SN108K	A-4778A	11.350 25.00
SAOL	1 11/16	9.5 3/8	79.40 3 1/8	123.8 4 7/8	146.0 5 3/4	79.4 3 1/8	228.6 9	288.9 11 3/8	19.0 3/4	25.4 1	20.6 13/16	74.6 2 15/16	49.2 1 15/16	–	2	16 5/8	SMN111KS	SN111K	A-4778	11.150 24.56
SAOL	1 15/16	9.5 3/8	79.40 3 1/8	122.2 4 13/16	158.8 6 1/4	79.4 3 1/8	228.6 9	288.9 11 3/8	19.0 3/4	25.4 1	20.6 13/16	73.8 2 29/32	48.4 1 29/32	–	2	16 5/8	SMN115KS	SN115K	A-3818	12.462 27.45
SAOL	2 3/16	9.1 23/64	95.25 3 3/4	139.7 5 1/2	171.4 6 3/4	88.9 3 1/2	259.7 10 1/4	320.7 12 5/8	22.2 7/8	31.8 1 1/4	27.0 1 1/16	82.6 3 1/4	57.2 2 1/4	–	2	20 3/4	SMN203KS	SN203K	A-4755	15.409 33.94
SAOL	2 7/16	8.7 11/32	104.80 4 1/8	150.0 5 29/32	190.5 7 1/2	101.6 4	285.8 11 1/4	349.2 13 3/4	22.2 7/8	31.8 1 1/4	27.0 1 1/16	91.3 3 19/32	58.7 2 5/16	–	2	20 3/4	SMN207KS	SN207K	A-3819	18.841 41.50
SAOL	2 11/16	9.5 3/8	115.89 4 9/16	174.6 6 7/8	215.9 8 1/2	111.1 4 3/8	304.8 12	390.6 15 3/8	25.4 1	31.8 1 1/4	31.8 1 1/4	109.5 4 5/16	65.1 2 9/16	–	2	22 7/8	SMN211KS	SO211K	A-4709	26.332 58.00
SAOL	2 15/16	12.7 1/2	115.89 4 9/16	177.8 7	225.4 8 7/8	111.1 4 3/8	314.3 12 3/8	390.6 15 3/8	25.4 1	31.8 1 1/4	31.8 1 1/4	104.8 4 1/8	73.0 2 7/8	–	2	22 7/8	SMN215KS	SN215K	A-4798	33.823 74.50

[1]When four bolts are used, dimension J_1 is the distance between centers, and A_1 and T are measured from the center of the base.

Continued on next page.

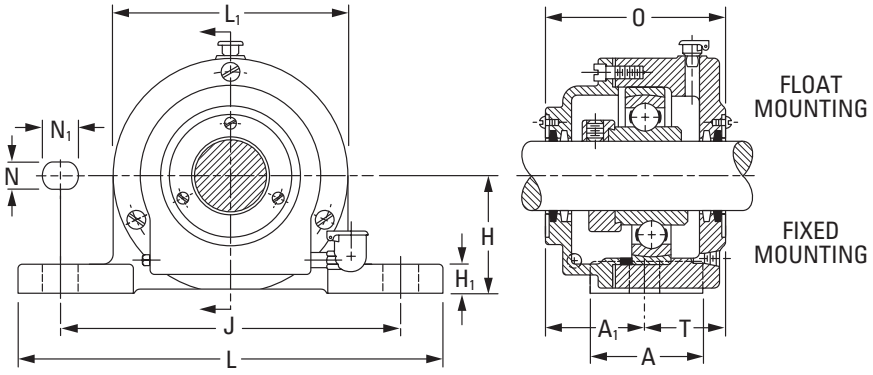

Continued from previous page.

Unit	Shaft Dia.	Total Float	H	O	L_1	A	J	L	N	N_1	H_1	A_1	T	J_1[1]	Bolt No.	Bolt Size	Bearing No.	Collar No.	Housing No.	Unit Wt.
	in.	**mm** in.	**mm** in	**mm** in.	**mm** in.	**mm** in.	**mm** in.	**mm** in.	**mm** in.	**mm** in.	**mm** in.	**mm** in.	**mm** in.	**mm** in.		**mm** in.			New	**kg** lbs.
SAOL	3 3/16	**13.1** 33/64	**115.89** 4 9/16	**184.2** 7 1/4	**241.3** 9 1/2	**111.1** 4 3/8	**314.3** 12 3/8	**390.6** 15 3/8	**25.4** 1	**31.8** 1 1/4	**31.8** 1 1/4	**108.0** 4 1/4	**76.2** 3	**57.2** 2 1/4	4	**22** 7/8	SMN303KS	SN303K	A-4780	**35.298** 77.75
SAOL	3 7/16	**13.5** 17/32	**130.2** 5 1/8	**190.5** 7 1/2	**260.4** 10 1/4	**120.6** 4 3/4	**339.7** 13 3/8	**409.6** 16 1/8	**25.4** 1	**31.8** 1 1/4	**31.8** 1 1/4	**111.1** 4 3/8	**79.4** 3 1/8	**76.2** 3	4	**22** 7/8	SMN307KS	SN307K	A-4155	**48.805** 107.5
SAOL	3 11/16	**12.7** 1/2	**144.5** 5 11/16	**213.5** 8 13/32	**279.4** 11	**125.4** 4 15/16	**374.6** 14 3/4	**439.7** 17 5/16	**28.6** 1 1/8	**38.1** 1 1/2	**31.8** 1 1/4	**133.4** 5 1/4	**80.2** 3 5/32	–	2	**24** 1	SMO311WS	SO311K	A-4156	**54.48** 120.0
SAOL	3 15/16	**17.5** 11/16	**152.4** 6	**219.9** 8 21/32	**298.4** 11 3/4	**133.4** 5 1/4	**393.1** 15 1/2	**469.9** 18 1/2	**28.6** 1 1/8	**38.1** 1 1/2	**34.9** 1 3/8	**127.0** 5	**92.9** 3 21/32	**82.6** 3 1/4	4	**24** 1	SMN315KS	SN315K	A-4795	**70.824** 156.0
SAOL	4 3/16	**15.9** 5/8	**165.1** 6 1/2	**225.4** 8 7/8	**317.5** 12 1/2	**158.8** 6 1/4	**449.3** 17 11/16	**539.8** 21 1/4	**28.6** 1 1/8	**38.1** 1 1/2	**38.1** 1 1/2	**134.1** 5 9/32	**91.3** 3 19/32	**101.6** 4	4	**24** 1	SMN403WS	SN403K	T-14342	**88.076** 194.0
SAOL	4 7/16	**14.3** 9/16	**177.8** 7	**228.6** 9	**327.0** 12 7/8	**171.4** 6 3/4	**449.3** 17 11/16	**539.8** 21 1/4	**31.8** 1 1/4	**44.4** 1 3/4	**44.4** 1 3/4	**134.9** 5 5/16	**93.6** 3 11/16	**108.0** 4 1/4	4	**27** 1 1/8	SMN407WS	SN407K	T-11469	**95.34** 210.0
SAOL	4 15/16	**31.4** 1 15/64	**209.6** 8 1/4	**261.9** 10 5/16	**381.0** 15	**184.2** 7 1/4	**514.4** 20 1/4	**630.2** 24 13/16	**31.8** 1 1/4	**44.4** 1 3/4	**50.8** 2	**152.4** 6	**109.5** 4 5/16	**120.6** 4 3/4	4	**27** 1 1/8	SMN415WS	SN415K	T-11783	**160.262** 353.0

[1]When four bolts are used, dimension J_1 is the distance between centers, and A_1 and T are measured from the center of the base.

DRNR INDUSTRIAL SERIES

- This rigid double pillow block is designed to provide a sturdy two-bearing mounting for fans and blowers, bench grinders, buffers, vertical shafts and similar heavy-duty applications.
- The compact, one-piece housing is equipped with two wide-inner-ring ball bearings with integral R-seals and a self-locking collar.
- Individual grease chambers are provided for both bearings.
- The close clearance baffles allow excess grease to work into the center chamber of the housing.
- The grease fittings that take the place of standard pipe plugs provide the means of relubrication.
- This pillow block can be mounted in any position, with ample radial and thrust capacity.

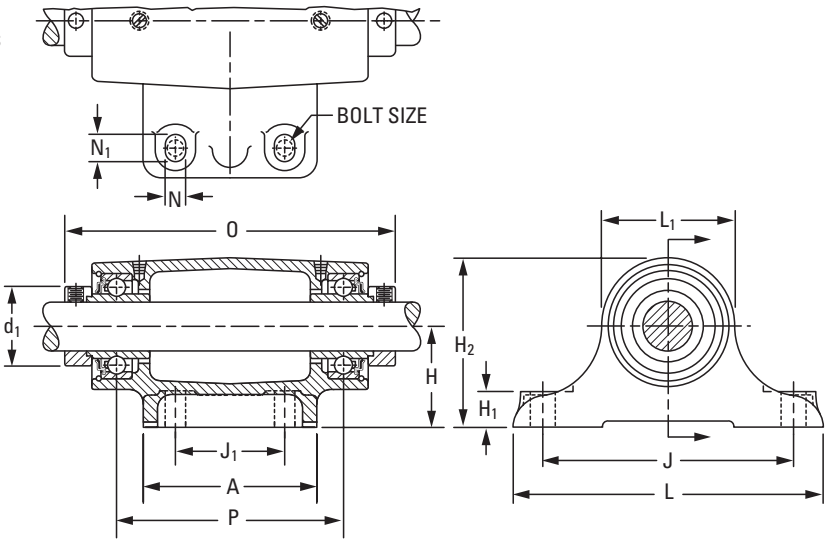

Suggested shaft tolerances:

15/16 in. – 1 15/16 in., nominal to -0.013 mm, -0.0005 in.;

2 in. – 2 3/16 in., nominal to -0.025 mm, -0.0010 in.

To order, specify UNIT and SHAFT DIAMETER.

Example: DRNR 1 7/16 in.

BEARING DATA

Unit	Bearing No.	Dimensions and Load Ratings
DRNR	KR	Page A-32

Unit	Shaft Dia.	H	H_2	O	L_1	J	L	A	H_1	N	N_1	J_1	d_1	P	Bolt (4 req'd)	Bearing No. (2 req'd)	Collar No.	Housing No.	Unit Wt.
	in.	**mm** in	**mm** in.	**mm** in.	**mm** in.	**mm** in.	**mm** in.	**mm** in.	**mm** in.	**mm** in.	**mm** in.	**mm** in.	**mm** in.	**mm** in.	**mm** in.			New	**kg** lbs.
DRNR	15/16	**63.5** 2 1/2	**99.2** 3 29/32	**200.0** 7 7/8	**71.4** 2 13/16	**158.8** 6 1/4	**196.8** 7 3/4	**108.0** 4 1/4	**19.0** 3/4	**12.7** 1/2	**15.9** 5/8	**69.8** 2 3/4	**38.1** 1 1/2	**146.0** 5 3/4	**10** 3/8	1015KR	S1015K	T-19189	**4.812** 10.60
DRNR	1 3/16	**63.5** 2 1/2	**105.6** 4 5/32	**203.2** 8	**84.1** 3 5/16	**158.8** 6 1/4	**196.8** 7 3/4	**108.0** 4 1/4	**22.2** 7/8	**12.7** 1/2	**15.9** 5/8	**69.8** 2 3/4	**44.1** 1 47/64	**142.9** 5 5/8	**10** 3/8	1103KR	S1103K	T-19191	**5.167** 11.38
DRNR	1 7/16	**76.2** 3	**123.8** 4 7/8	**276.2** 10 7/8	**95.2** 3 3/4	**203.2** 8	**254.0** 10	**139.7** 5 1/2	**25.4** 1	**15.9** 5/8	**22.2** 7/8	**88.9** 3 1/2	**54.0** 2 1/8	**211.5** 8 21/64	**12** 1/2	1107KR	S1107K	T-19193	**9.625** 21.20
DRNR	1 11/16	**76.2** 3	**133.4** 5 1/4	**279.4** 11	**114.3** 4 1/2	**203.2** 8	**254.0** 10	**139.7** 5 1/2	**25.4** 1	**15.9** 5/8	**22.2** 7/8	**88.9** 3 1/2	**63.5** 2 1/2	**209.6** 8 1/4	**12** 1/2	1111KR	S1111K	T-19197	**11.690** 25.75
DRNR	1 15/16	**88.9** 3 1/2	**150.8** 5 5/16	**352.4** 13 7/8	**123.8** 4 7/8	**241.3** 9 1/2	**304.8** 12	**177.8** 7	**28.5** 1 1/8	**17.5** 11/16	**28.5** 1 1/8	**114.3** 4 1/2	**69.8** 2 3/4	**276.2** 10 7/8	**16** 5/8	1115KR	S1115K	T-19195	**18.841** 41.50
DRNR	2 3/16	**88.9** 3 1/2	**158.8** 6 1/4	**355.6** 14	**133.4** 5 1/4	**241.3** 9 1/2	**304.8** 12	**177.8** 7	**31.8** 1 1/4	**17.5** 11/16	**28.5** 1 1/8	**114.3** 4 1/2	**76.2** 3	**268.3** 10 9/16	**16** 5/8	1203KR	S1203K	A-9598	**23.608** 52.00

CAST-IRON FLANGED UNITS

RCJ, TCJ, LCJ INDUSTRIAL SERIES

- Timken cartridges are used in applications where a minimum amount of machining is to be done.
- Each unit comes assembled and ready for mounting, with bolts through the flange.
- These are wide-inner-ring ball bearings, self-aligning B-types, which compensate for shaft misalignment.
- The RCJ flange cartridge is equipped with G-KRRB (R-seal) wide-inner-ring ball bearings. The TCJ is equipped with G-KPPB (tri-ply seal) wide-inner-ring ball bearings. The LCJ is equipped with the G-KLLB (Mechani-seal) wide-inner-ring ball bearings.
- The TCJ flange cartridges are identical to RCJ units, except they use the tri-ply seal bearing. Tri-ply units offer the best protection in dirty environments.
- The units are factory-prelubricated, but a grease fitting is provided for relubrication if required. The units are supplied with self-locking collars.
- Contact a Timken engineer to discuss highly corrosive applications (food processing, chemical exposure) where Timken thin-dense chrome-coated bearings can be used.
- Safety end caps are available for selected sizes.

Suggested shaft tolerances:

1 13/16 in. – 1 15/16 in., nominal to -0.013 mm, -0.0005 in.;

2 in. – 2 15/16 in., nominal to -0.025 mm, -0.0010 in.

For larger sizes, consult your Timken engineer.

To order, specify UNIT and SHAFT DIAMETER.

Example: RCJ 1 3/16 in.

BEARING DATA

Unit	Bearing No.	Dimensions and Load Ratings
RCJ	G-KRRB	Page A-34
TCJ	G-KPPB	Page A-39
LCJ	G-KLLB	Page A-37

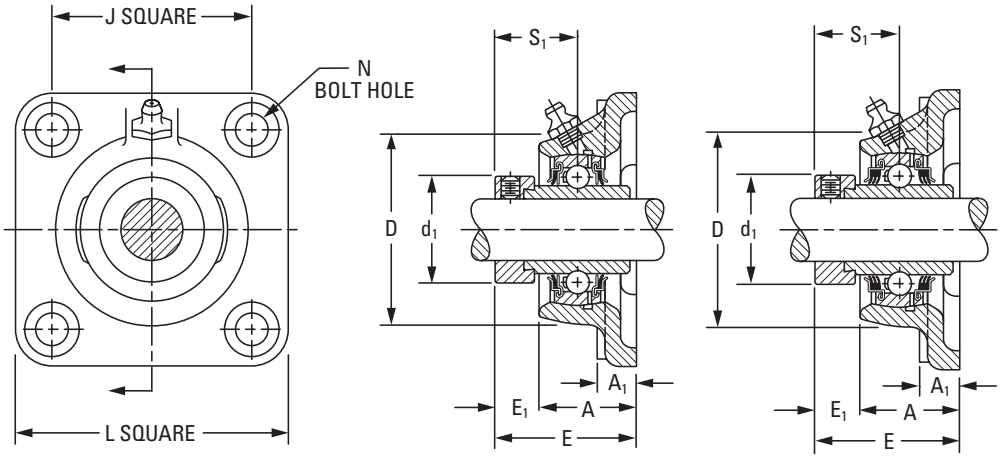

RCJ, LCJ **TCJ**

Unit[1]	Shaft Dia.	L	J	A_1	A	E	N	E_1	S_1	D	d_1	Bolt Size	Bearing No.[2]		Collar No.	Housing No.	Unit Wt.
	in. **mm**	**mm** in.	**mm** in.	**mm** in.	**mm** in.	**mm** in.	**mm** in.	**mm** in.	**mm** in.	**mm** in.	**mm** in.	**mm** in.	RCJ	(TCJ)		New (Old)	**kg** lbs.
RCJ	1/2												G1008KRRB		S1008K		
RCJ	5/8	**76.2**	**54.0**	**9.5**	**23.6**	**40.6**	**10.7**	**13.9**	**23.4**	**52.4**	**28.1**	**10**	G1010KRRB	–	S1010K	T-40278	**0.526**
RCJ	11/16	3	2 1/8	13/32	0.929	1.599	27/64	35/64	59/64	2 1/16	1.105	3/8	G1011KRRB		S1011K	(T-16659)	1.16
RCJ	**17**												GE17KRRB		SE17K		
RCJ	3/4	**85.7**	**63.5**	**11.1**	**27.8**	**46.4**	**10.7**	**16.3**	**26.6**	**60.3**	**32.8**	**10**	G1012KRRB	–	S1012K	T-40267	**0.726**
RCJ	**20**	3 3/8	2 1/2	7/16	1.094	1.828	27/64	41/64	1 3/64	2 3/8	1.292	3/8	GE20KRRB		SE20K	(T-16661)	1.60
RCJ, TCJ	7/8												G1014KRRB	(KPPB3)	S1014K		
RCJ, TCJ	15/16	**95.2**	**69.8**	**12.7**	**27.9**	**46.6**	**11.5**	**15.9**	**27.0**	**65.1**	**37.6**	**10**	G1015KRRB	(KPPB3)	S1015K	T-40262	**0.939**
RCJ, TCJ	1	3 3/4	2 3/4	1/2	1.100	1.834	29/64	5/8	1 1/16	2 9/16	1.480	3/8	G1100KRRB	(KPPB3)	S1100K	(T-16663)	2.07
RCJ, TCJ	**25**												GE25KRRB	(KPPB3)	SE25K		
RCJ, TCJ	1 1/16												G1101KRRB	(KPPB3)	S1101K		
RCJ, TCJ	1 1/8	**107.9**	**82.6**	**13.5**	**29.9**	**50.5**	**11.5**	**17.5**	**30.2**	**76.2**	**43.9**	**10**	G1102KRRB	(KPPB3)	S1102K	T-40266	**1.302**
RCJ, TCJ	1 3/16	4 1/4	3 1/4	17/32	1.178	1.990	29/64	11/16	1 3/16	3	1.730	3/8	G1103KRRB	(KPPB3)	S1103K	(T-16664)	2.87
RCJ, TCJ	**30**												GE30KRRB	(KPPB3)	SE30K		

[1]Type LCJ uses G-KLLB.
[2]Bearing number for RCJ is G-KRRB. TCJ uses G-KPPB.

Continued on next page.

RCJ, TCJ, LCJ INDUSTRIAL SERIES *– continued*

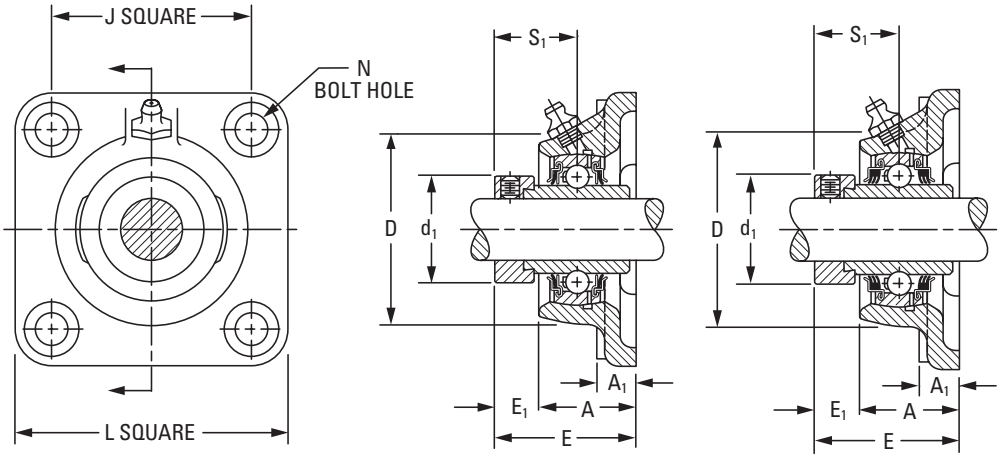

RCJ, LCJ **TCJ**

Continued from previous page.

Unit[1]	Shaft Dia.	L	J	A_1	A	E	N	E_1	S_1	D	d_1	Bolt Size	Bearing No.[2]		Collar No.	Housing No.	Unit Wt.
	in. **mm**	**mm** in.	**mm** in.	**mm** in.	**mm** in.	**mm** in.	**mm** in.	**mm** in.	**mm** in.	**mm** in.	**mm** in.	**mm** in.	RCJ	(TCJ)		New (Old)	**kg** lbs.
RCJ, TCJ	1 1/4												G1104KRRB	(KPPB2)	S1104K		
RCJ, TCJ	1 5/16												G1105KRRB	(KPPB2)	S1105K		
RCJ, TCJ	1 3/8	**117.5** 4 5/8	**92.1** 3 5/8	**13.5** 17/32	**31.8** 1.254	**53.5** 2.106	**13.1** 33/64	**19.0** 3/4	**32.5** 1 9/32	**88.9** 3 1/2	**53.6** 2.112	**12** 1/2	G1106KRRB	(KPPB2)	S1106K	T-40253 (T-16617)	**1.787** 3.94
RCJ, TCJ	1 7/16												G1107KRRB	(KPPB2)	S1107K		
RCJ, TCJ	**35**												GE35KRRB	(KPPB2)	SE35K		
RCJ, TCJ	1 1/2												G1108KRRB	(KPPB3)	S1108KT		
RCJ, TCJ	1 9/16	**130.2** 5 1/8	**101.6** 4	**14.3** 9/16	**38.1** 1.500	**59.3** 2.334	**13.1** 33/64	**20.6** 13/16	**34.9** 1 3/8	**98.4** 3 7/8	**58.2** 2.292	**12** 1/2	G1109KRRB	(KPPB3)	S1109KT	T-40263 (T-16666)	**2.291** 5.05
RCJ, TCJ	**40**												GE40KRRB	(KPPB3)	SE40K		
RCJ, TCJ	1 5/8												G1110KRRB	(KPPB4)	S1110K		
RCJ, TCJ	1 11/16	**136.5** 5 3/8	**104.8** 4 1/8	**14.3** 9/16	**38.9** 1.531	**59.3** 2.334	**13.1** 33/64	**19.8** 25/32	**34.9** 1 3/8	**104.8** 4 1/8	**63.0** 2.480	**12** 1/2	G1111KRRB	(KPPB4)	S1111K	T-40264 (T-16667)	**2.585** 5.70
RCJ, TCJ	1 3/4												G1112KRRB	(KPPB4)	S1112K		
RCJ, TCJ	**45**												GE45KRRB	(KPPB4)	SE45K		
RCJ, TCJ	1 7/8												G1114KRRB	(KPPB3)	S1114K		
RCJ, TCJ	1 15/16	**142.9** 5 5/8	**111.1** 4 3/8	**14.3** 9/16	**42.9** 1.688	**66.4** 2.615	**17.1** 43/64	**23.0** 29/32	**38.1** 1 1/2	**112.7** 4 7/16	**69.3** 2.730	**16** 5/8	G1115KRRB	(KPPB3)	S1115K	T-40265 (T-16668)	**3.016** 6.65
RCJ, TCJ	**50**												GE50KRRB	(KPPB3)	SE50K		
RCJ, TCJ	2												G1200KRRB	(KPPB4)	S1200K		
RCJ, TCJ	2 1/8	**161.9** 6 3/8	**130.2** 5 1/8	**16.7** 21/32	**46.8** 1.844	**75.1** 2.958	**17.1** 43/64	**27.8** 1 3/32	**43.7** 1 23/32	**120.6** 4 3/4	**75.7** 2.980	**16** 5/8	G1202KRRB	(KPPB4)	S1202K	T-40268 (T-16683)	**3.842** 8.47
RCJ, TCJ	2 3/16												G1203KRRB	(KPPB4)	S1203K		
RCJ, TCJ	**55**												GE55KRRB	(KPPB4)	SE55K		
RCJ	2 1/4												G1204KRRB		S1204K		
RCJ	2 3/8	**174.6** 6 7/8	**142.9** 5 5/8	**17.5** 11/16	**49.2** 1.937	**81.6** 3.214	**17.1** 43/64	**31.8** 1 1/4	**46.8** 1 27/32	**136.5** 5 3/8	**83.6** 3.292	**16** 5/8	G1206KRRB	–	S1206K	T-40269 (T-17648)	**5.048** 11.13
RCJ	2 7/16												G1207KRRB		S1207K		
RCJ	**60**												GE60KRRB		SE60K		
RCJ	2 11/16	**187.3** 7 3/8	**149.2** 5 7/8	**19.1** 3/4	**63.5** 2.500	**90.3** 3.557	**16.3** 41/64	**25.4** 1	**45.2** 1 25/32	**152.4** 6	**96.3** 3.792	**16** 5/8	G1211KRRB	–	S1211K	T-22530 (T-22270)	**6.885** 15.18
RCJ	**70**												GE70KRRB		SE70K		
RCJ	2 15/16	**196.8** 7 3/4	**152.4** 6	**22.2** 7/8	**66.7** 2.625	**96.7** 3.807	**19.8** 25/32	**26.2** 1 1/32	**54.8** 2 5/32	**161.9** 6 3/8	**101.1** 3.980	**16** 5/8	G1215KRRB	–	S1215K	T-21620 (T-21620)	**8.210** 18.100
RCJ	**75**												GE75KRRB		SE75K		

[1]Type LCJ uses G-KLLB.
[2]Bearing number for RCJ is G-KRRB. TCJ uses G-KPPB.

RCJC INDUSTRIAL-SERIES CONCENTRIC COLLAR

- These units have the same basic design as the RCJ series, except a concentric collar is used as the shaft-locking device instead of a self-locking cam collar.
- All RCJC units are equipped with GC-KRRB wide inner ring, concentric-collar bearings.
- The spherical outside diameter of the bearings is mounted in corresponding machined housing seats to provide the initial self-alignment.
- The bolt-hole spacing dimensions are interchangeable with the RCJ series and most competitive units.
- The units are factory-prelubricated, but a grease fitting is provided for relubrication if required.
- Concentric collars are supplied with all units.
- Safety end caps are available for selected sizes.

Suggested shaft tolerances:

1/2 in. – 1 15/16 in., nominal to -0.013 mm, -0.0005 in.;

2 in. – 2 15/16 in., nominal to -0.025 mm, -0.0010 in.

To order, specify UNIT and SHAFT DIAMETER.

Example: RCJC 1 3/16 in.

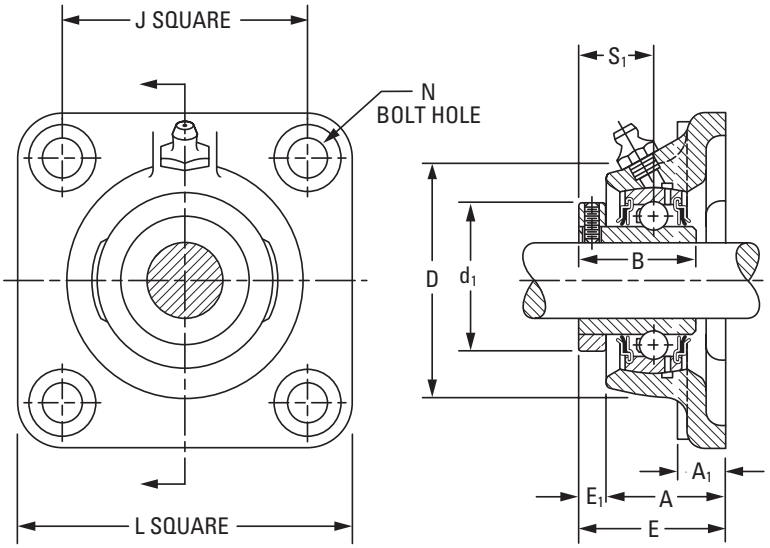

BEARING DATA

Unit	Bearing No.	Dimensions and Load Ratings
RCJC	GC-KRRB	Page A-40

Unit	Shaft Dia.	L	J	A_1	A	E	N	E_1	B	D	d_1	S_1	Bolt Size	Bearing No.	Collar No.	Housing No.	Unit Wt.
	in.	mm in	mm in.	mm in.	mm in.	mm in.	mm in.	mm in.	mm in.	mm in.	mm in.	mm in.					kg lbs.
RCJC	5/8	76.2 3	53.98 2 1/8	11.1 7/16	22.2 7/8	30.2 1 3/16	9.9 25/64	7.9 5/16	26.6 1 3/64	52.4 2 1/16	34.1 1 11/32	15.5 39/64	10 3/8	GC1010KRRB	C203	T-27113	0.486 1.07
RCJC	3/4	85.7 3 3/8	63.5 2 1/2	11.1 7/16	25.8 1 1/64	32.5 1 9/32	9.9 25/64	6.7 17/64	31.0 1 7/32	60.3 2 3/8	38.1 1 1/2	18.7 47/64	10 3/8	GC1012KRRB	C204	T-26605	0.645 1.42
RCJC	1	95.2 3 3/4	69.85 2 3/4	11.1 7/16	28.6 1 1/8	36.1 1 27/64	11.5 29/64	7.5 19/64	34.1 1 11/32	65.1 2 9/16	44.4 1 3/4	20.2 51/64	10 3/8	GC1100KRRB	C205	T-26614	0.781 1.72
RCJC RCJC RCJC	1 1/8 1 3/16 1 1/4 S	107.9 4 1/4	82.55 3 1/4	12.7 1/2	30.2 1 3/16	39.3 1 35/64	11.5 29/64	9.1 23/64	37.3 1 15/32	76.2 3	52.4 2 1/16	22.6 57/64	10 3/8	GC1102KRRB GC1103KRRB GC1103KRRB3	C206	T-26630	1.135 2.50
RCJC RCJC RCJC	1 1/4 1 3/8 1 7/16	117.5 4 5/8	92.08 3 5/8	14.3 9/16	34.1 1 11/32	44.4 1 3/4	13.1 33/64	10.3 13/32	41.3 1 5/8	88.9 3 1/2	59.5 2 11/32	25.4 1	12 1/2	GC1104KRRB GC1106KRRB GC1107KRRB	C207	T-26665	1.707 3.76
RCJC	1 1/2	130.2 5 1/8	101.60 4	17.5 11/16	40.5 1 19/32	51.2 2 1/64	13.1 33/64	10.7 27/64	44.1 1 47/64	98.4 3 7/8	68.3 2 11/16	27.4 1 5/64	12 1/2	GC1108KRRB	C208	T-16666A	2.238 4.93
RCJC RCJC	1 11/16 1 3/4	136.5 5 3/8	104.78 4 1/8	17.5 11/16	41.3 1 5/8	53.2 2 3/32	13.1 33/64	11.9 15/32	46.8 1 27/32	104.8 4 1/8	73.0 2 7/8	29.4 1 5/32	12 1/2	GC1111KRRB GC1112KRRB	C209	T-16667A	2.538 5.59
RCJC	1 15/16	142.9 5 5/8	111.12 4 3/8	15.9 5/8	42.1 1 21/32	54.8 2 5/32	17.1 43/64	12.7 1/2	48.4 1 29/32	112.7 4 7/16	79.4 3 1/8	30.2 1 3/16	16 5/8	GC1115KRRB	C210	T-26700	2.797 6.16
RCJC RCJC	2 2 3/16	161.9 6 3/8	130.18 5 1/8	19.0 3/4	44.4 1 3/4	58.7 2 5/16	17.1 43/64	14.3 9/16	54.0 2 1/8	120.6 4 3/4	88.9 3 1/2	33.33 1 5/16	16 5/8	GC1200KRRB GC1203KRRB	C211	T-26712	4.036 8.89
RCJC	2 7/16	174.6 6 7/8	142.88 5 5/8	19.0 3/4	47.6 1 7/8	65.9 2 19/32	16.3 41/64	18.3 23/32	60.3 2 3/8	136.5 5 3/8	95.2 3 3/4	37.3 1 15/32	16 5/8	GC1207KRRB	C212	T-26726	4.926 10.85
RCJC	2 15/16	196.8 7 3/4	152.40 6	22.2 7/8	54.0 2 1/8	75.4 2 31/32	19.8 25/32	21.4 27/32	70.6 2 25/32	161.9 6 3/8	114.3 4 1/2	43.7 1 23/32	16 5/8	GC1215KRRB	C215	T-27128	7.473 16.46

NOTE: Shaft diameter with an S = smaller housing.

YCJ INDUSTRIAL SET SCREW SERIES

- Incorporates Shaft Guarding Technology, which reduces replacement time, provides shaft protection and prolongs the life of the shaft.
- The same basic design as the RCJ series, except specially designed set screws are used as the locking device instead of an eccentric collar.
- All units are equipped with GY-KRRB wide-inner-ring set screw bearings.
- Spherical outside diameter of the bearings mounted in the corresponding machined housing seats provides the initial self-alignment.
- Bolt-hole spacing dimensions are interchangeable with the RCJ series and most competitive units.
- Units are factory-prelubricated, but a grease fitting is provided for relubrication if required.
- Safety end caps are available for selected sizes.

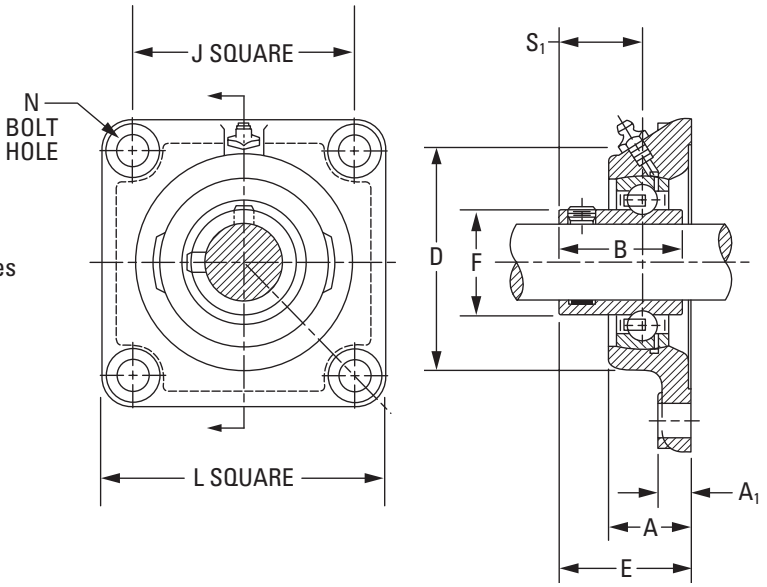

Suggested shaft tolerances:

½ in. – 1 15/16 in., nominal to -0.013 mm, -0.0005 in.;

2 in. – 2 15/16 in., nominal to -0.025 mm, -0.0010 in.

To order, specify UNIT and SHAFT DIAMETER.

Example: YCJ 1 7/16 in.

BEARING DATA

Unit	Bearing No.	Dimensions and Load Ratings
YCJ	GY-KRRB	Page A-44

Unit	Shaft Dia.	L	J	A_1	A	E	N	B	D	F	S_1	Bolt Size	Bearing No.
	in. **mm**	**mm** in.	**mm** in.	**mm** in.	**mm** in.	**mm** in.	**mm** in.	**mm** in.	**mm** in.	**mm** in.	**mm** in.	**mm** in.	
YCJ	½												GY1008KRRB
YCJ	⅝	**76.2** 3	**54.0** 2 1/8	**10.3** 13/32	**23.6** 0.929	**32.50** 1.296	**10.72** 27/64	**27.40** 1 5/64	**52.4** 2 1/16	**23.90** 0.941	**15.9** ⅝	**10** ⅜	GY1010KRRB
YCJ	**17**												GYE17KRRB
YCJ SGT	¾	**85.7**	**63.5**	**11.1**	**27.8**	**38.40**	**10.72**	**31.80**	**60.3**	**27.56**	**19.1**	**10**	GY1012KRRB SGT
YCJ SGT	**20**	3 3/8	2 1/2	7/16	1.094	1.513	27/64	1 1/4	2 3/8	1.085	¾	⅜	GYE20KRRB SGT
YCJ SGT	⅞												GY1014KRRB SGT
YCJ SGT	15/16	**95.2**	**69.8**	**12.7**	**27.9**	**40.00**	**11.51**	**34.90**	**65.1**	**33.88**	**20.6**	**10**	GY1015KRRB SGT
YCJ SGT	1	3 3/4	2 49/64	½	1.100	1.575	29/64	1 3/8	2 9/16	1.331	13/16	⅜	GY1100KRRB SGT
YCJ SGT	**25**												GYE25KRRB SGT
YCJ SGT	1 1/8												GY1102KRRB SGT
YCJ SGT	1 3/16	**107.9**	**82.6**	**13.5**	**29.9**	**43.46**	**11.51**	**39.29**	**76.2**	**40.31**	**23.4**	**10**	GY1103KRRB SGT
YCJ	1 1/4 S	4 1/4	3 1/4	17/32	1.178	1.711	29/64	1 35/64	3	1.587	59/64	⅜	GY1103KRRB3
YCJ SGT	**30**												GYE30KRRB SGT
YCJ SGT	1 1/4												GY1104KRRB SGT
YCJ SGT	1 3/8	**117.5**	**92.1**	**13.5**	**31.8**	**48.95**	**13.10**	**45.20**	**88.9**	**46.81**	**28.2**	**12**	GY1106KRRB SGT
YCJ SGT	1 7/16	4 5/8	3 5/8	17/32	1.254	1.927	33/64	1 25/32	3 1/2	1.843	1 7/16	½	GY1107KRRB SGT
YCJ SGT	**35**												GYE35KRRB SGT
YCJ SGT	1 1/2	**130.2**	**101.6**	**14.3**	**38.1**	**54.40**	**13.10**	**49.20**	**98.4**	**52.27**	**30.2**	**12**	GY1108KRRB SGT
YCJ SGT	**40**	5 1/8	4	9/16	1.500	2.141	33/64	1 15/16	3 7/8	2.057	1 3/16	½	GYE40KRRB SGT

NOTE: Shaft diameter with an S = smaller housing.

Continued on next page.

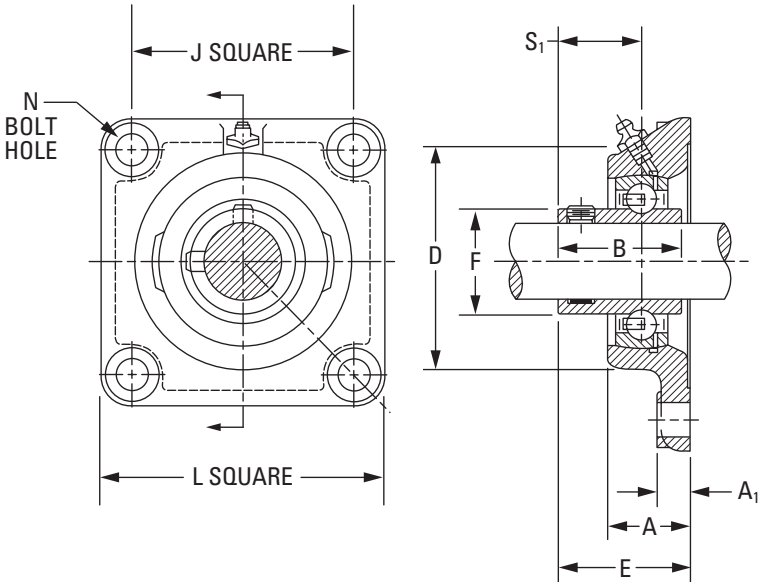

Continued from previous page.

Unit	Shaft Dia.	L	J	A_1	A	E	N	B	D	F	S_1	Bolt Size	Bearing No.
	in. **mm**	**mm** in.	**mm** in.	**mm** in.	**mm** in.	**mm** in.	**mm** in.	**mm** in.	**mm** in.	**mm** in.	**mm** in.	**mm** in.	
YCJ SGT	1 5/8												GY1110KRRB SGT
YCJ SGT	1 11/16	**136.5**	**104.8**	**14.3**	**38.9**	**55.52**	**13.10**	**50.40**	**104.8**	**57.92**	**31.4**	**12**	GY1111KRRB SGT
YCJ SGT	1 3/4	5 3/8	4 1/8	9/16	1.531	2.186	33/64	1 63/64	4 1/8	2.279	1 15/16	1/2	GY1112KRRB SGT
YCJ SGT	**45**												GYE45KRRB SGT
YCJ SGT	1 15/16												GY1115KRRB SGT
YCJ	2 S	**142.9**	**111.1**	**14.3**	**42.9**	**60.70**	**17.07**	**51.60**	**112.7**	**62.84**	**32.5**	**16**	GY1115KRRB3
YCJ SGT	**50**	5 5/8	4 3/8	9/16	1.688	2.390	43/64	2 1/32	4 7/16	2.473	1 9/32	5/8	GYE50KRRB SGT
YCJ SGT	2												GY1200KRRB SGT
YCJ SGT	2 3/16	**161.9**	**130.2**	**16.7**	**46.8**	**64.70**	**17.07**	**55.60**	**120.7**	**69.77**	**33.3**	**16**	GY1203KRRB SGT
YCJ SGT	**55**	6 3/8	5 1/8	21/32	1.844	2.546	43/64	2 3/16	4 3/4	2.747	1 5/16	5/8	GYE55KRRB SGT
YCJ SGT	2 7/16	**174.6**	**142.9**	**17.5**	**49.2**	**74.20**	**17.07**	**65.10**	**136.5**	**76.48**	**39.1**	**16**	GY1207KRRB SGT
YCJ SGT	**60**	6 7/8	5 5/8	11/16	1.937	2.921	43/64	2 9/16	5 3/8	3.011	1 9/16	5/8	GYE60KRRB SGT
YCJ	2 11/16	**187.3**	**149.2**	**19.0**	**63.5**	**81.40**	**16.27**	**69.90**	**152.4**	**86.92**	**42.9**	**16**	GY1211KRRB
YCJ	**70**	7 3/8	5 7/8	3/4	2.500	3.204	41/64	2 3/4	6	3.422	1 11/16	5/8	GYE70KRRB
YCJ	2 15/16	**196.8**	**152.4**	**23.8**	**66.7**	**86.20**	**19.84**	**77.80**	**161.9**	**91.92**	**44.4**	**20**	GY1215KRRB
YCJ	**75**	7 3/4	6	15/16	2.625	3.392	25/32	3 1/16	6 3/8	3.619	1 3/4	3/4	GYE75KRRB

NOTE: Shaft diameter with an S = smaller housing.

VCJ STANDARD SERIES

- The flange cartridges come assembled and ready for mounting by using four bolts through the flange.
- The VCJ-series flange cartridges require minimal machining.
- The units are assembled with GRA-RRB bearings with positive-contact, land-riding seals and self-locking collars.
- The units are factory-prelubricated, but a grease fitting is provided for relubrication if required.
- Safety end caps are available for selected sizes.

Suggested shaft tolerances:

1/2 in. – 1 15/16 in., nominal to -0.013 mm, -0.0005 in.;
2 in. – 2 3/16 in., nominal to -0.025 mm, -0.0010 in.

To order, specify UNIT and SHAFT DIAMETER.

Example: VCJ 1 in.

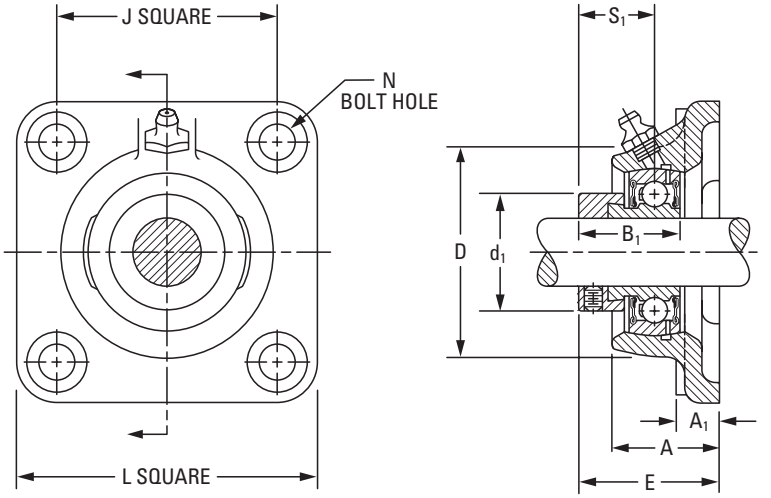

BEARING DATA

Unit	Bearing No.	Dimensions and Load Ratings
VCJ	GRA-RRB	Page A-50

Unit	Shaft Dia.	L	J	A_1	A	E	N	B_1	D	d_1	S_1	Bolt Size	Bearing No.	Collar No.	Housing No.	Unit Wt.
	in. **mm**	**mm** in.	**mm** in.	**mm** in.	**mm** in.	**mm** in.	**mm** in.	**mm** in.	**mm** in.	**mm** in.	**mm** in.	**mm** in.			New (Old)	**kg** lbs.
VCJ	1/2	**76.2**	**53.98**	**10.3**	**23.6**	**39.3**	**10.7**	**28.6**	**52.4**	**28.1**	**22.2**	**10**	GRA008RRB	S1008K	T-40278 (T-16659)	**0.527**
VCJ	5/8	3	2 1/8	13/32	0.929	1.548	27/64	1 1/8	2 1/16	1.105	7/8	3/8	GRA010RRB	S1010K		1.16
VCJ	**17**												GRAE17RRB	SE17K		
VCJ	3/4	**85.7**	**63.50**	**11.1**	**27.8**	**43.3**	**10.7**	**31.0**	**60.3**	**32.8**	**23.4**	**10**	GRA012RRB	S1012K	T-40267 (T-16661A)	**0.654**
VCJ	**20**	3 3/8	2 1/2	7/16	1.094	1.706	27/64	1 7/32	2 3/8	1.292	59/64	3/8	GRAE20RRB	SE20K		1.44
VCJ	7/8												GRA014RRB	S1014K		
VCJ	15/16	**95.2**	**69.85**	**12.7**	**27.9**	**43.1**	**11.5**	**31.0**	**65.1**	**37.6**	**23.4**	**10**	GRA015RRB	S1015K	T-40262 (T-16663A)	**0.894**
VCJ	1	3 3/4	2 3/4	1/2	1.100	1.696	29/64	1 7/32	2 9/16	1.480	59/64	3/8	GRA100RRB	S1100K		1.97
VCJ	**25**												GRAE25RRB	SE25K		
VCJ	1 1/8												GRA102RRB	S1102K		
VCJ	1 3/16	**107.9**	**82.55**	**13.5**	**29.9**	**47.1**	**11.5**	**35.7**	**76.2**	**43.9**	**27.0**	**10**	GRA103RRB	S1103K	T-40266 (T-16664A)	**1.239**
VCJ	1 1/4 S	4 1/4	3 1/4	17/32	1.178	1.856	29/64	1 13/32	3	1.730	1 1/16	3/8	GRA103RRB2	S1103K3		2.73
VCJ	**30**												GRAE30RRB	SE30K		
VCJ	1 1/4												GRA104RRB	S1104K		
VCJ	1 3/8	**117.5**	**92.08**	**13.5**	**31.8**	**50.5**	**13.1**	**38.9**	**88.9**	**53.6**	**29.4**	**12**	GRA106RRB	S1106K	T-40253 (T-16617A)	**1.707**
VCJ	1 7/16	4 5/8	3 5/8	17/32	1.254	1.989	33/64	1 17/32	3 1/2	2.112	1 5/32	1/2	GRA107RRB	S1107		3.76
VCJ	**35**												GRAE35RRB	SE35K		
VCJ	1 1/2	**130.2**	**101.60**	**14.3**	**38.1**	**58.3**	**13.1**	**43.7**	**98.4**	**58.2**	**32.5**	**12**	GRA108RRB	S1108KT	T-40263 (T-16666A)	**2.175**
VCJ	**40**	5 1/8	4	9/16	1.500	2.297	33/64	1 23/32	3 7/8	2.292	1 9/32	1/2	GRAE40RRB	SE40K		4.79
VCJ	1 5/8												GRA110RRB	S1110K		
VCJ	1 11/16	**136.5**	**104.78**	**14.3**	**38.9**	**57.0**	**13.1**	**43.7**	**104.8**	**63.0**	**32.5**	**12**	GRA111RRB	S1111K	T-40264 (T-16667A)	**2.438**
VCJ	1 3/4	5 3/8	4 1/8	9/16	1.531	2.244	33/64	1 23/32	4 1/8	2.480	1 9/32	1/2	GRA112RRB	S1112K		5.37
VCJ	**45**												GRAE45RRB	SE45K		
VCJ	1 7/8												GRA114RRB	S1114K		
VCJ	1 15/16	**142.9**	**111.12**	**14.3**	**42.9**	**61.0**	**17.1**	**43.7**	**112.7**	**69.3**	**32.5**	**16**	GRA115RRB	S1115K	T-40265 (T-16668A)	**2.788**
VCJ	2 S	5 5/8	4 3/8	9/16	1.688	2.400	43/64	1 23/32	4 7/16	2.730	1 9/32	5/8	GRA115RRB2	S1115K2		6.14
VCJ	**50**												GRAE50RRB	SE50K		
VCJ	2	**161.9**	**130.18**	**16.7**	**46.8**	**67.9**	**17.1**	**48.4**	**120.6**	**75.7**	**36.5**	**16**	GRA200RRB	S1200K	T-40236 (T-16683A)	**3.269**
VCJ	2 3/16	6 3/8	5 1/8	21/32	1.844	2.672	43/64	1 29/32	4 3/4	2.980	1 7/16	5/8	GRA203RRB	S1203K		7.20
VCJ	**55**												GRAE55RRB	SE55K		

NOTE: Shaft diameter with an S = smaller housing.

SCJ STANDARD SERIES

- The flange cartridges come assembled and ready for mounting by using four bolts through the flange.
- The units are ideal for applications where minimum shaft length is required.
- The units are assembled with GYA-RRB bearings with positive-contact, land-riding seals and set screw locking.
- The units are factory-prelubricated, but a grease fitting is provided for relubrication if required.
- Safety end caps are available for selected sizes.

Suggested shaft tolerances:

1/2 in. – 1 15/16 in.,
nominal to -0.013 mm, -0.0005 in.;
2 in. – 2 3/16 in., nominal to -0.025 mm, -0.0010 in.

To order, specify UNIT and SHAFT DIAMETER.

Example: SCJ 1 in.

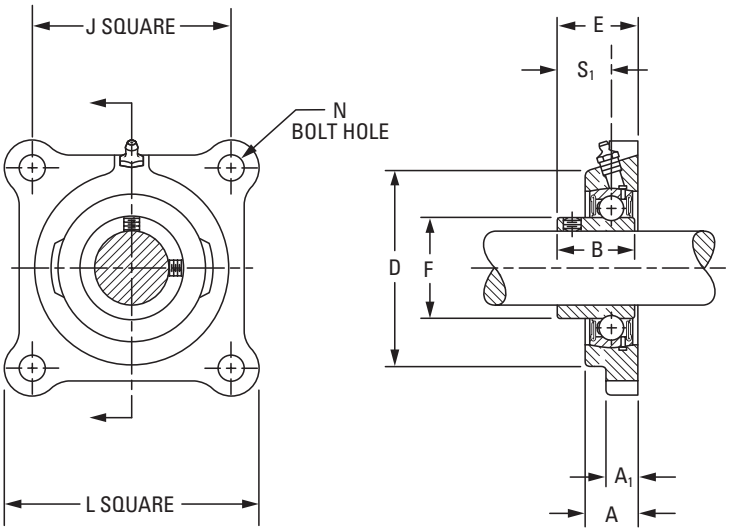

BEARING DATA

Unit	Bearing No.	Dimensions and Load Ratings
SCJ	GYA-RRB	Page A-54

Unit	Shaft Dia.	L	J	A_1	A	E	N	B	D	F	S_1	Bolt Size	Bearing No.	Housing No.	Unit Wt.
	in. **mm**	**mm** in.	**mm** in.	**mm** in.	**mm** in.	**mm** in.	**mm** in.	**mm** in.	**mm** in.	**mm** in.	**mm** in.	**mm** in.			**kg** lbs.
SCJ SCJ SCJ	1/2 5/8 **17**	**76.2** 3	**53.98** 2 1/8	**11.1** 7/16	**17.9** 45/64	**25.4** 1	**10.7** 27/64	**23.8** 15/16	**52.4** 2 1/16	**24.6** 31/32	**15.9** 5/8	**10** 3/8	GYA008RRB GYA010RRB GYAE17RRB	T-40124	**0.47** 1.03
SCJ SCJ	3/4 **20**	**85.7** 3 3/8	**63.50** 2 1/2	**11.1** 7/16	**19.0** 3/4	**28.6** 1 1/8	**10.7** 27/64	**27.0** 1 1/16	**60.3** 2 3/8	**29.0** 1 9/64	**18.3** 23/32	**10** 3/8	GYA012RRB GYAE20RRB	T-40126	**0.52** 1.14
SCJ SCJ SCJ SCJ	7/8 15/16 1 **25**	**95.2** 3 3/4	**69.85** 2 3/4	**13.5** 17/32	**19.8** 25/32	**29.8** 1 11/64	**11.5** 29/64	**28.2** 1 7/64	**65.1** 2 9/16	**33.7** 1 21/64	**19.4** 49/64	**10** 3/8	GYA014RRB GYA015RRB GYA100RRB GYAE25RRB	T-40128	**0.68** 1.50
SCJ SCJ SCJ SCJ	1 1/8 1 3/16 1 1/4 S **30**	**107.9** 4 1/4	**82.55** 3 1/4	**14.3** 9/16	**21.4** 27/32	**34.1** 1 11/32	**11.5** 29/64	**32.5** 1 9/32	**76.2** 3	**40.1** 1 37/64	**23.0** 29/32	**10** 3/8	GYA102RRB GYA103RRB GYA103RRB2 GYAE30RRB	T-40130	**1.19** 2.62
SCJ SCJ SCJ SCJ	1 1/4 1 3/8 1 7/16 **35**	**117.5** 4 5/8	**92.08** 3 5/8	**15.1** 19/32	**24.6** 31/32	**38.1** 1 1/2	**13.1** 33/64	**36.5** 1 7/16	**88.9** 3 1/2	**46.8** 1 27/32	**25.8** 1 1/64	**12** 1/2	GYA104RRB GYA106RRB GYA107RRB GYAE35RRB	T-40132	**1.35** 2.98
SCJ SCJ	1 1/2 **40**	**130.2** 5 1/8	**101.60** 4	**15.9** 5/8	**26.2** 1 1/32	**40.9** 1 39/64	**13.1** 33/64	**39.3** 1 35/64	**98.4** 3 7/8	**52.4** 2 1/16	**27.8** 1 3/32	**12** 1/2	GYA108RRB GYAE40RRB	T-40134	**2.10** 4.63
SCJ SCJ SCJ SCJ	1 5/8 1 11/16 1 3/4 **45**	**136.5** 5 3/8	**104.78** 4 1/8	**15.9** 5/8	**28.6** 1 1/8	**43.6** 1 23/32	**13.1** 33/64	**42.1** 1 21/32	**104.8** 4 1/8	**57.9** 2 9/32	**28.6** 1 1/8	**12** 1/2	GYA110RRB GYA111RRB GYA112RRB GYAE45RRB	T-40164	**2.24** 4.94
SCJ SCJ SCJ	1 15/16 2 S **50**	**142.9** 5 5/8	**111.12** 4 3/8	**16.7** 21/32	**28.6** 1 1/8	**46.0** 1 13/16	**17.1** 43/64	**44.4** 1 3/4	**112.7** 4 7/16	**62.6** 2 15/32	**30.9** 1 7/32	**16** 5/8	GYA115RRB GYA115RRB2 GYAE50RRB	T-40166	**2.55** 5.63
SCJ SCJ SCJ	2 2 3/16 **55**	**161.9** 6 3/8	**130.18** 5 1/8	**18.2** 23/32	**30.9** 1 7/32	**48.0** 1 57/64	**17.1** 43/64	**46.4** 1 53/64	**120.6** 4 3/4	**69.8** 2 3/4	**31.7** 1 1/4	**16** 5/8	GYA200RRB GYA203RRB GYAE55RRB	T-40168	**2.96** 6.53

NOTE: Shaft diameter with an S = smaller housing.

RCJO, LCJO HEAVY SERIES

- The flange cartridges are similar in design to the standard series.
- The units are ideal for applications where minimum machining is to be done.
- The units come assembled and ready for mounting by using four bolts through the flange.
- The RCJO units are assembled with GN-KRRB (R-seal) wide-inner-ring bearings. LCJO units are equipped with GN-KLLB (L-seal) wide-inner-ring ball bearings.
- The units are factory-prelubricated, but a grease fitting is provided for relubrication if required.
- The units are supplied with self-locking collars and are dimensionally interchangeable.

Suggested shaft tolerances:

1 3/16 in. – 1 15/16 in., nominal to -0.013 mm, -0.0005 in.;

2 in. – 3 15/16 in., nominal to -0.025 mm, -0.0010 in.

To order, specify UNIT and SHAFT DIAMETER.

Example: RCJO 1 7/16 in., LCJO 1 11/16 in.

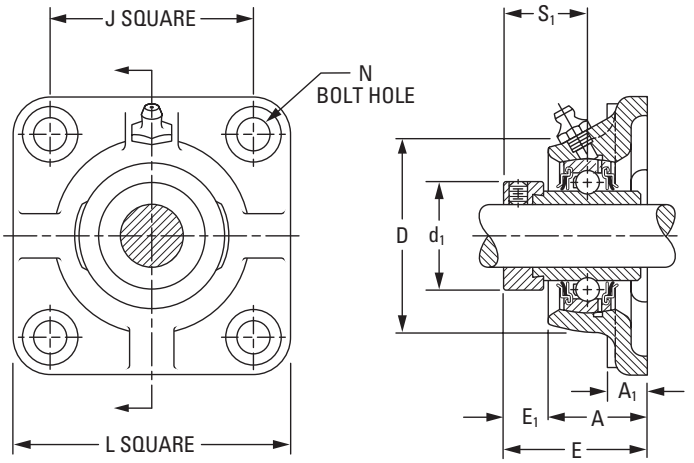

BEARING DATA

Unit	Bearing No.	Dimensions and Load Ratings
RCJO	GN-KRRB	Page A-57
LCJO	GN-KLLB	Page A-59

Unit	Shaft Dia.	L	J	A_1	A	E	N	E_1	S_1	D	d_1	Bolt Size	Bearing No.	Collar No.	Housing No.	Unit Wt.
	in.	**mm** in.	**mm** in.	**mm** in.	**mm** in.	**mm** in.	**mm** in.	**mm** in.	**mm** in.	**mm** in.	**mm** in.	**mm** in.	RCJO LCJO			**kg** lbs.
RCJO, LCJO	1 3/16	**120.6** 4 3/4	**92.1** 3 5/8	**14.3** 9/16	**38.1** 1.500	**53.7** 2.115	**14.3** 9/16	**15.1** 19/32	**32.5** 1 9/32	**96.8** 3 13/16	**48.7** 1.918	**12** 1/2	GN103KRRB (KLLB)	SN103K	T-19165	**1.816** 4.00
RCJO, LCJO	1 7/16	**130.2** 5 1/8	**101.6** 4	**15.9** 5/8	**40.5** 1.594	**55.3** 2.177	**14.3** 9/16	**14.3** 9/16	**33.3** 1 5/16	**104.8** 4 1/8	**55.1** 2.168	**12** 1/2	GN107KRRB (KLLB)	SN107	T-19167	**2.497** 5.50
RCJO, LCJO	1 1/2	**136.5** 5 3/8	**104.8** 4 1/8	**15.9** 5/8	**44.4** 1.750	**60.8** 2.396	**15.9** 5/8	**15.9** 5/8	**37.3** 1 15/32	**114.3** 4 1/2	**63.0** 2.480	**14** 9/16	GN108KRRB (KLLB)	SN108K	T-19169	**3.133** 6.90
RCJO, LCJO	1 11/16	**142.9** 5 5/8	**111.1** 4 3/8	**17.5** 11/16	**46.8** 1.844	**62.4** 2.458	**15.9** 5/8	**15.1** 19/32	**38.9** 1 17/32	**123.8** 4 7/8	**69.3** 2.730	**14** 9/16	GN111KRRB (KLLB)	SN111K	T-19171	**3.573** 7.87
RCJO	1 15/16	**165.1** 6 1/2	**130.2** 5 1/8	**17.5** 11/16	**53.2** 2.094	**70.4** 2.771	**17.5** 11/16	**16.7** 21/32	**42.1** 1 21/32	**141.3** 5 9/16	**75.7** 2.980	**16** 5/8	GN115KRRB	SN115K	T-19173	**5.185** 11.42
RCJO	2 3/16	**177.8** 7	**142.9** 5 5/8	**17.5** 11/16	**58.7** 2.312	**76.7** 3.021	**17.5** 11/16	**17.5** 11/16	**45.2** 1 25/32	**154.0** 6 1/16	**82.0** 3.230	**16** 5/8	GN203KRRB	SN203K	T-19175	**6.424** 14.15
RCJO	2 7/16	**190.5** 7 1/2	**149.2** 5 7/8	**19.0** 3/4	**65.1** 2.562	**84.7** 3.333	**20.6** 13/16	**19.0** 3/4	**48.4** 1 29/32	**160.3** 6 5/16	**88.4** 3.480	**20** 3/4	GN207KRRB	SN207K	T-19177	**7.409** 16.32
RCJO	2 11/16	**225.4** 8 7/8	**177.8** 7	**22.2** 7/8	**72.2** 2.844	**89.4** 3.521	**23.8** 15/16	**21.4** 27/32	**54.8** 2 5/32	**185.7** 7 5/16	**101.1** 3.980	**22** 7/8	GN211KRRB	SO211K	T-19179	**9.534** 21.00
RCJO	2 15/16	**231.8** 9 1/8	**184.2** 7 1/4	**22.2** 7/8	**77.8** 3.062	**105.3** 4.146	**23.8** 15/16	**27.0** 1 1/16	**62.7** 2 15/32	**198.4** 7 13/16	**112.2** 4.418	**22** 7/8	GN215KRRB	SN215K	T-19181	**14.128** 31.12
RCJO	3 7/16	**279.4** 11	**215.9** 8 1/2	**28.6** 1 1/8	**84.1** 3.312	**121.2** 4.770	**27.0** 1 1/16	**36.5** 1 7/16	**73.8** 2 29/32	**228.6** 9	**132.3** 5.210	**24** 1	GN307KRRB	SN307K	T-24475	**21.474** 47.30
RCJO	3 15/16	**317.5** 12 1/2	**241.3** 9 1/2	**31.8** 1 1/4	**96.8** 3.812	**133.6** 5.260	**30.2** 1 3/16	**36.5** 1 7/16	**78.6** 3 3/32	**266.7** 10 1/2	**145.5** 5.730	**27** 1 1/8	GN315KRRB	SN315K	T-24477	**30.645** 67.50

YCJM MEDIUM-DUTY SERIES SET SCREW LOCK

- This series includes four-bolt flanged cartridges featuring GYM-KRRB bearing inserts.
- This series is ideal for conveyor, fan and blower, sawmill, and feed and grain-handling applications.
- The durable cast-iron housings are powder-coated and maintain an excellent finish while resisting corrosion, chemicals and weather exposure.
- The industrial-duty flanged cartridges incorporate premium features designed to extend bearing life.

Suggested shaft tolerances:

1 in. – 1 15/16 in., nominal to -0.013 mm, -0.0005 in.;
2 in. – 3 15/16 in., nominal to -0.025 mm, -0.0010 in.

To order, specify UNIT and SHAFT DIAMETER.

Example: YCJM 1 7/16 in.

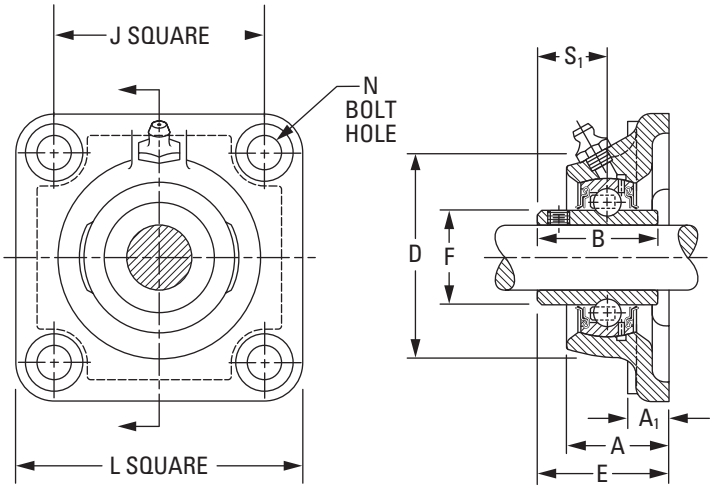

BEARING DATA

Unit	Bearing No.	Dimensions and Load Ratings
YCJM	GYM-KRRB	Page A-56

Unit	Shaft Dia.	L	J	A_1	A	E	N	B	D	F	S_1	Bolt Size	Bearing No.
	in.	mm in.	mm in.	mm in.	mm in.	mm in.	mm in.	mm in.	mm in.	mm in.	mm in.	mm in.	
YCJM	1	**107.9** 4 1/4	**82.6** 3 1/4	**13.5** 17/32	**29.9** 1.178	**42.4** 1.671	**11.51** 29/64	**38.10** 1 1/2	**76.2** 3	**40.31** 1.587	**22.2** 7/8	**10** 3/8	GYM1100KRRB
YCJM	1 3/16	**117.5** 4 5/8	**92.1** 3 5/8	**13.5** 17/32	**31.8** 1.254	**46.4** 1.827	**13.10** 33/64	**42.90** 1 11/16	**88.9** 3 1/2	**46.81** 1.843	**25.4** 1	**12** 1/2	GYM1103KRRB
YCJM	1 7/16	**130.2** 5 1/8	**101.6** 4	**14.8** 9/16	**38.1** 1.500	**54.4** 2.141	**13.10** 33/64	**49.20** 1 15/16	**98.4** 3 7/8	**52.27** 2.058	**30.2** 1 3/16	**12** 1/2	GYM1107KRRB
YCJM	1 1/2	**136.5** 5 3/8	**104.8** 4 1/8	**14.3** 9/16	**38.9** 1.531	**54.4** 2.141	**13.10** 33/64	**49.20** 1 15/16	**104.8** 4 1/8	**57.92** 2.280	**30.2** 1 3/16	**12** 1/2	GYM1108KRRB
YCJM YCJM	1 11/16 1 3/4	**142.9** 5 5/8	**111.1** 4 3/8	**14.3** 9/16	**42.9** 1.688	**60.7** 2.390	**17.07** 43/64	**51.60** 2 1/32	**112.7** 4 7/16	**62.84** 2.474	**32.5** 1 9/32	**16** 5/8	GYM1111KRRB GYM1112KRRB
YCJM YCJM	1 15/16 2	**161.9** 6 3/8	**130.2** 5 1/8	**16.7** 21/32	**46.8** 1.844	**64.7** 2.546	**17.07** 43/64	**55.60** 2 3/16	**120.7** 4 3/4	**69.77** 2.747	**33.3** 1 15/16	**16** 5/8	GYM1115KRRB GY1200KRRB
YCJM YCJM	2 3/16 2 1/4	**174.6** 6 7/8	**142.9** 5 5/8	**17.5** 11/16	**49.2** 1.937	**74.3** 2.926	**17.07** 43/64	**65.10** 2 9/16	**136.5** 5 3/8	**76.48** 3.011	**39.1** 1 9/16	**16** 5/8	GYM1203KRRB GY1204KRRB
YCJM YCJM	2 7/16 2 1/2	**187.3** 7 3/8	**149.2** 5 7/8	**19.0** 3/4	**63.5** 2.500	**81.5** 3.208	**17.07** 43/64	**69.90** 2 3/4	**152.4** 6	**86.92** 3.422	**42.9** 1 11/16	**16** 5/8	GYM1207KRRB GYM1208KRRB
YCJM	2 11/16	**196.8** 7 3/4	**152.4** 6	**22.2** 7/8	**66.7** 2.625	**86.2** 3.396	**19.84** 25/32	**77.80** 3 1/16	**161.9** 6 3/8	**91.92** 3.619	**44.4** 1 3/4	**20** 3/4	GYM1211KRRB
YCJM YCJM	2 15/16 3	**196.8** 7 3/4	**152.4** 6	**22.2** 7/8	**66.7** 2.625	**90.8** 3.576	**19.84** 25/32	**77.80** 3 1/16	**179.4** 7 1/16	**98.37** 3.873	**44.4** 1 15/16	**20** 3/4	GYM1215KRRB GYM1300KRRB
YCJM	3 7/16	**214.3** 8 7/16	**171.4** 6 3/4	**25.4** 1	**70.5** 2.776	**101.1** 3.981	**19.84** 25/32	**95.94** 3 25/32	**196.8** 7 3/4	**111.68** 4.397	**56.4** 2 7/32	**20** 3/4	GYM1307KRRB
YCJM	3 15/16	**268.3** 10 9/16	**211.1** 8 5/16	**31.8** 1 1/4	**95.4** 3.755	**127.3** 5.014	**26.19** 1 1/32	**117.35** 4 5/8	**235.0** 9 1/4	**131.30** 5.171	**68.3** 2 11/16	**24** 1	GYM1315KRRB

YCJTM MEDIUM-DUTY SERIES SET SCREW LOCK

- The medium-duty, two-bolt flanged cartridges feature GYM-KRRB bearing inserts.
- This series is ideal for conveyor, fan and blower, sawmill, and feed and grain-handling applications.
- The durable cast-iron housings are powder-coated and maintain an excellent finish while resisting corrosion, chemicals and weather exposure.
- The industrial-duty flanged cartridge units incorporate premium features designed to extend bearing life. They can replace competitive designs.

Suggested shaft tolerances:

1 – 1 15/16 in., nominal to -0.013 mm, -0.0005 in.;

2 in., nominal to -0.025 mm, -0.0010 in.

To order, specify UNIT and SHAFT DIAMETER.

Example: YCJTM 1 7/16 in.

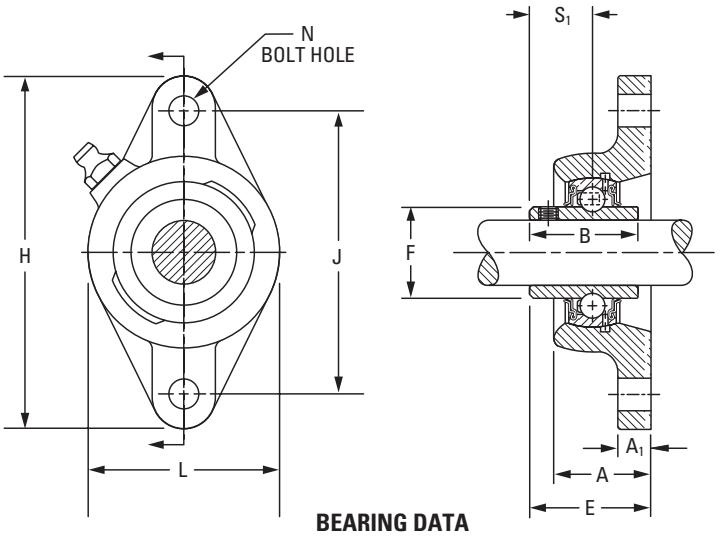

BEARING DATA

Unit	Bearing No.	Dimensions and Load Ratings
YCJTM	GYM-KRRB	Page A-56

Unit	Shaft Dia.	H	J	L	A	E	N	B	A_1	F	S_1	Bolt Size	Bearing No.
	in.	**mm** in.	**mm** in.	**mm** in.	**mm** in.	**mm** in.	**mm** in.	**mm** in.	**mm** in.	**mm** in.	**mm** in.	**mm** in.	
YCJTM	1	**141.3** 5 9/16	**116.7** 4 19/32	**79.5** 3 1/8	**29.9** 1.178	**42.4** 1.671	**11.51** 29/64	**38.1** 1 1/2	**13.5** 17/32	**40.31** 1.587	**22.2** 7/8	**10** 3/8	GYM1100KRRB
YCJTM	1 3/16	**155.6** 6 1/8	**130.2** 5 1/8	**92.1** 3 5/8	**31.8** 1.254	**46.4** 1.827	**13.10** 33/64	**42.9** 1 11/16	**11.9** 15/32	**46.79** 1.843	**25.4** 1	**12** 1/2	GYM1103KRRB
YCJTM	1 7/16	**171.5** 6 3/4	**143.7** 5 21/32	**104.8** 4 1/8	**38.1** 1.500	**54.4** 2.141	**13.10** 33/64	**49.2** 1 15/16	**12.7** 1/2	**52.27** 2.058	**30.2** 1 3/16	**12** 1/2	GYM1107KRRB
YCJTM	1 1/2	**179.4** 7 1/16	**148.4** 5 27/32	**111.1** 4 3/8	**38.9** 1.531	**54.4** 2.141	**13.10** 33/64	**49.2** 1 15/16	**12.7** 1/2	**57.92** 2.280	**30.2** 1 3/16	**12** 1/2	GYM1108KRRB
YCJTM YCJTM	1 11/16 1 3/4	**188.9** 7 7/16	**157.2** 6 3/16	**115.9** 4 9/16	**42.9** 1.688	**60.7** 2.390	**17.07** 43/64	**51.6** 2 1/32	**12.7** 1/2	**62.81** 2.473	**32.5** 1 9/32	**16** 5/8	GYM1111KRRB GYM1112KRRB
YCJTM YCJTM	1 15/16 2	**215.9** 8 1/2	**184.2** 7 1/4	**127.0** 5	**46.8** 1.844	**64.7** 2.546	**17.07** 43/64	**55.6** 2 3/16	**16.7** 21/32	**69.77** 2.747	**33.3** 1 15/16	**16** 5/8	GYM1115KRRB GY1200KRRB

RCJT, TCJT, LCJT INDUSTRIAL SERIES

- The cartridges are the same basic design as RCJ, TCJ, and LCJ types, except they have two bolt holes instead of four.
- This series is primarily designed for applications where the mounting area is restricted.
- The RCJT cartridge is equipped with G-KRRB (R-seal) wide-inner-ring ball bearings. The TCJT is equipped with G-KPPB (tri-ply seal) wide-inner-ring ball bearings. The LCJT is equipped with the G-KLLB (Mechani-seal) wide-inner-ring ball bearings.
- The units are factory-prelubricated, but a grease fitting is provided for relubrication.
- Safety end caps are available for selected sizes.

Suggested shaft tolerances:

1/2 in. – 1 15/16 in., nominal to -0.013 mm, -0.0005 in.;
2 in. – 2 3/16 in., nominal to -0.025 mm, -0.0010 in.

To order, specify UNIT and SHAFT DIAMETER.

Example: RCJT 1 3/16 in., TCJT 1 3/16 in.

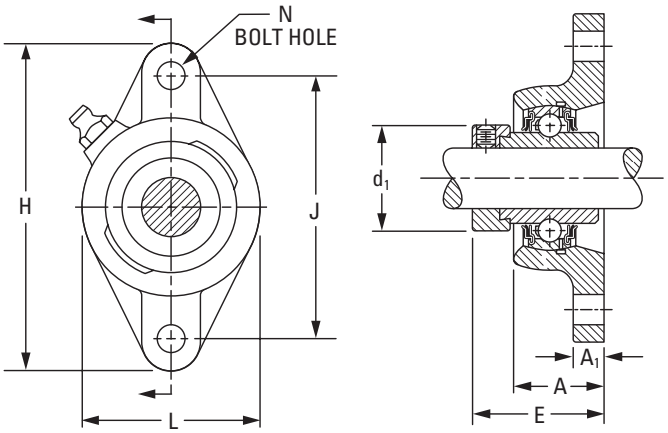

BEARING DATA

Unit	Bearing No.	Dimensions and Load Ratings
RCJT	G-KRRB	Page A-34
TCJT	G-KPPB	Page A-39
LCJT	G-KLLB	Page A-37

Unit	Shaft Dia.	H	J	L	A	N	E	A_1	d_1	Bolt Size	Bearing No.			Collar No.	Housing No.	Unit Wt.
	in. **mm**	**mm** in.	**mm** in.	**mm** in.	**mm** in.	**mm** in.	**mm** in.	**mm** in.	**mm** in.	**mm** in.	RCJT	TCJT	LCJT		New (Old)	**kg** lbs.
RCJT	1/2										G1008KRRB			S1008K		
RCJT	5/8	**98.4**	**76.2**	**54.0**	**23.6**	**10.7**	**40.6**	**10.3**	**28.1**	**10**	G1010KRRB	–	–	S1010K	T-40219	**0.590**
RCJT	11/16	3 7/8	3	2 1/8	0.929	27/64	1.599	13/32	1.105	3/8	G1011KRRB			S1011K		1.30
RCJT	**17**										GE17KRRB			SE17K		
RCJT	3/4	**111.9**	**89.7**	**60.5**	**27.8**	**10.7**	**46.4**	**11.1**	**32.8**	**10**	G1012KRRB	–	–	S1012K	T-40220	**0.590**
RCJT	**20**	4 13/32	3 17/32	2 3/8	1.094	27/64	1.828	7/16	1.292	3/8	GE20KRRB			SE20K		1.30
RCJT, TCJT, LCJT	13/16										G1013KRRB	G1013KPPB3	G1013KLLB	S1013K		
RCJT, TCJT, LCJT	7/8	**123.8**	**99.2**	**69.8**	**27.9**	**11.5**	**46.7**	**11.1**	**23.9**	**10**	G1014KRRB	G1014KPPB3	G1014KLLB	S1014K	T-40221	**0.785**
RCJT, TCJT, LCJT	15/16	4 7/8	3 29/32	2 3/4	1.100	29/64	1.839	7/16	1.480	3/8	G1015KRRB	G1015KPPB3	G1015KLLB	S1015K	(T-21412P)	1.73
RCJT, TCJT, LCJT	1										G1100KRRB	G1100KPPB3	G1100KLLB	S1100K		
RCJT, TCJT, LCJT	**25**										GE25KRRB	GE25KPPB3	GE25KLLB	SE25K		
RCJT, TCJT, LCJT	1 1/16										G1101KRRB	G1101KPPB3	G1101KLLB	S1101K		
RCJT, TCJT, LCJT	1 1/8	**141.3**	**116.7**	**79.4**	**29.9**	**11.5**	**50.5**	**11.9**	**43.7**	**10**	G1102KRRB	G1102KPPB3	G1102KLLB	S1102K	T-40222	**1.090**
RCJT, TCJT, LCJT	1 3/16	5 9/16	4 19/32	3 1/8	1.178	29/64	1.990	15/32	1.730	3/8	G1103KRRB	G1103KPPB3	G1103KLLB	S1103K	(T-21548P)	2.40
RCJT, TCJT, LCJT	1 1/4 S										G1103KRRB3	G1103KPPB4	G1103KLLB3	S1103K3		
RCJT, TCJT, LCJT	**30**										GE30KRRB	GE30KPPB3	GE30KLLB	SE30K		
RCJT, TCJT, LCJT	1 1/4										G1104KRRB	G1104KPPB2	G1104KLLB	S1104K[1]		
RCJT, TCJT, LCJT	1 5/16	**155.6**	**130.2**	**92.1**	**31.8**	**13.1**	**53.5**	**11.9**	**53.6**	**12**	G1105KRRB	G1105KPPB2	G1105KLLB	S1105K[1]	T-40223	**1.444**
RCJT, TCJT, LCJT	1 3/8	6 1/8	5 1/8	3 5/8	1.254	33/64	2.106	15/32	2.112	1/2	G1106KRRB	G1106KPPB2	G1106KLLB	S1106K[1]	(T-21414)	3.18
RCJT, TCJT, LCJT	1 7/16										G1107KRRB	G1107KPPB2	G1107KLLB	S1107K[1]		
RCJT, TCJT, LCJT	**35**										GE35KRRB	GE35KPPB2	GE35KLLB	SE35K		
RCJT, TCJT, LCJT	1 1/2	**171.4**	**143.6**	**104.7**	**38.1**	**13.1**	**59.3**	**12.7**	**58.2**	**12**	G1108KRRB	G1108KPPB3	G1108KLLB	S1108KT	T-40224	**2.193**
RCJT, TCJT, LCJT	1 9/16	6 3/4	5 21/32	4 1/8	1.500	33/64	2.334	1/2	2.292	1/2	G1109KRRB	G1109KPPB3	G1109KLLB	S1109KT	(T-22529)	4.83
RCJT, TCJT, LCJT	**40**										GE40KRRB	GE40KPPB3	GE40KLLB	SE40K		
RCJT, TCJT, LCJT	1 5/8										G1110KRRB	G1110KPPB4	G1110KLLB	S1110K		
RCJT, TCJT, LCJT	1 11/16	**179.4**	**148.0**	**111.1**	**38.9**	**13.1**	**59.3**	**12.7**	**63.0**	**12**	G1111KRRB	G1111KPPB4	G1111KLLB	S1111K	T-40225	**2.379**
RCJT, TCJT, LCJT	1 3/4	7 1/16	5 27/32	4 3/8	1.531	33/64	2.334	1/2	2.480	1/2	G1112KRRB	G1112KPPB4	G1112KLLB	S1112K	(T-21416)	5.24
RCJT, TCJT, LCJT	**45**										GE45KRRB	GE45KPPB4	GE45KLLB	SE45K		
RCJT, TCJT, LCJT	1 7/8	**188.9**	**157.2**	**115.9**	**42.9**	**17.1**	**66.4**	**12.7**	**69.3**	**16**	G1114KRRB	G1114KPPB3	G1114KLLB	S1114K	T-40226	**2.724**
RCJT, TCJT, LCJT	1 15/16	7 7/16	6 3/16	4 9/16	1.688	43/64	2.615	1/2	2.730	5/8	G1115KRRB	G1115KPPB3	G1115KLLB	S1115K	(T-21418)	6.00
RCJT, TCJT, LCJT	**50**										GE50KRRB	GE50KPPB3	GE50KLLB	SE50K		
RCJT, TCJT, LCJT	2										G1200KRRB	G1200KPPB4	G1200KLLB	S1200K		
RCJT, TCJT, LCJT	2 1/8	**215.9**	**184.1**	**127.0**	**46.8**	**17.1**	**75.1**	**16.7**	**75.7**	**16**	G1202KRRB	G1202KPPB4	G1202KLLB	S1202K	T-40227	**3.668**
RCJT, TCJT, LCJT	2 3/16	8 1/2	7 1/4	5	1.844	43/64	2.958	21/32	2.980	5/8	G1203KRRB	G1203KPPB4	G1203KLLB	S1203K	(T-23788)	8.08
RCJT, TCJT, LCJT	**55**										GE55KRRB	GE55KPPB4	GE55KLLB	SE55K		

[1]Add C1 suffix to collar numbers for G-KPPB2 bearings (TCJT).
NOTE: Shaft diameter with an S = smaller housing.

RCJTC INDUSTRIAL-SERIES CONCENTRIC COLLAR

- This series has the same basic design as RCJT, except it uses the concentric collar rather than the self-locking eccentric collar as the shaft-locking device.
- All units are equipped with GC-KRRB wide inner ring concentric collars.
- The spherical outside diameter mounted in the corresponding machined housing seats provides the initial self-alignment.
- The bolt-hole spacing dimensions are interchangeable with the RCJT series and most competitive units.
- The units are factory-prelubricated. A grease fitting is provided for relubrication.
- Safety end caps are available for selected sizes.

Suggested shaft tolerances:

1/2 in. – 1 15/16 in., nominal to -0.013 mm, -0.0005 in.;

To order, specify UNIT and SHAFT DIAMETER.

Example: RCJTC 1 3/16 in.

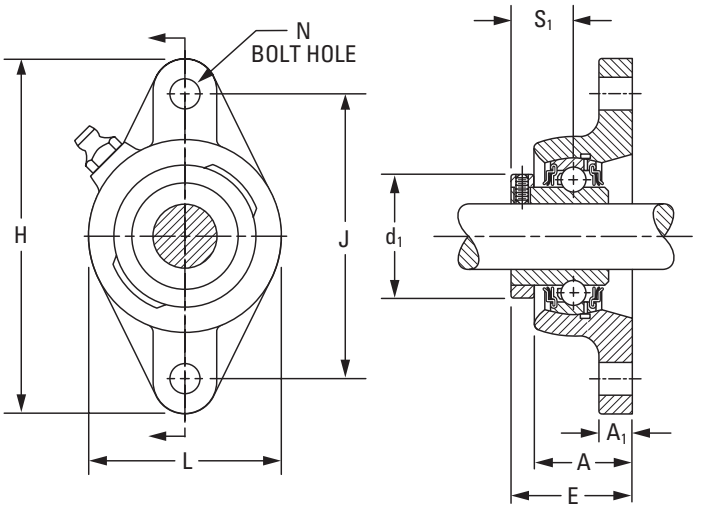

BEARING DATA

Unit	Bearing No.	Dimensions and Load Ratings
RCJTC	GC-KRRB	Page A-40

Unit	Shaft Dia.	H	J	L	A	E	N	A_1	d_1	S_1	Bolt Size	Bearing No.	Collar No.	Housing No.	Unit Wt.
	in.	**mm** in.	**mm** in.	**mm** in.	**mm** in.	**mm** in.	**mm** in.	**mm** in.	**mm** in.	**mm** in.	**mm** in.			New (Old)	**kg** lbs.
RCJTC	5/8	**98.4** 3 7/8	**76.20** 3	**60.3** 2 3/8	**23.6** 0.929	**32.7** 1.287	**9.9** 25/64	**8.3** 21/64	**33.8** 1.329	**15.5** 39/64	**10** 3/8	GC1010KRRB	C203	T-40270 (T-27181)	**0.368** 0.81
RCJTC	3/4	**111.9** 4 13/32	**89.70** 3 17/32	**60.3** 2 3/8	**27.8** 1.094	**38.2** 1.502	**9.9** 25/64	**11.1** 7/16	**37.7** 1.485	**18.7** 47/64	**10** 3/8	GC1012KRRB	C204	T-40271 (T-27183)	**0.545** 1.20
RCJTC	1	**123.8** 4 7/8	**98.81** 3 57/64	**69.8** 2 3/4	**27.9** 1.100	**39.8** 1.569	**11.9** 15/32	**13.5** 17/32	**44.1** 1.735	**20.2** 51/64	**10** 3/8	GC1100KRRB	C205	T-40272 (T-27200)	**0.717** 1.58
RCJTC RCJTC RCJTC	1 1/8 1 3/16 1 1/4 S	**141.3** 5 9/16	**116.70** 4 19/32	**81.0** 3 3/16	**29.9** 1.178	**43.0** 1.693	**11.5** 29/64	**13.5** 17/32	**52.3** 2.058	**22.6** 57/64	**10** 3/8	GC1102KRRB GC1103KRRB GC1103KRRB3	C206	T-401273 (T-27197)	**1.035** 2.28
RCJTC RCJTC RCJTC	1 1/4 1 3/8 1 7/16	**155.6** 6 1/8	**130.20** 5 1/8	**92.1** 3 5/8	**31.8** 1.254	**46.6** 1.834	**13.1** 33/64	**14.3** 9/16	**58.2** 2.292	**25.4** 1	**12** 1/2	GC1104KRRB GC1106KRRB GC1107KRRB	C207	T-40252	**1.498** 3.30
RCJTC	1 11/16	**179.4** 7 1/16	**148.40** 5 27/32	**111.1** 4 3/8	**38.9** 1.531	**53.7** 2.116	**13.1** 33/64	**14.3** 9/16	**72.9** 2.871	**29.4** 1 5/32	**12** 1/2	GC1111KRRB	C209	T-40275	**2.097** 4.62
RCJTC	1 15/16	**188.9** 7 7/16	**157.20** 6 3/16	**115.9** 4 9/16	**42.9** 1.688	**58.5** 2.303	**17.1** 43/64	**14.3** 9/16	**79.3** 3.121	**30.2** 1 3/16	**16** 5/8	GC1115KRRB	C210	T-40276	**2.497** 5.50

NOTE: Shaft diameter with an S = smaller housing.

VCJT STANDARD SERIES

- This series has the same design and features as the VCJ type, but has two bolt holes instead of four. This allows mounting in restricted areas.
- This series is assembled with GRA-RRB bearings with positive-contact, land-riding seals and self-locking collars.
- The units are factory-prelubricated. A grease fitting is provided for relubrication.
- Safety end caps are available for selected sizes.

Suggested shaft tolerances:

½ in. – 1 15/16 in., nominal to -0.013 mm, -0.0005 in.;

2 in. – 2 3/16 in., nominal to -0.025 mm, -0.0010 in.

To order, specify UNIT and SHAFT DIAMETER.

Example: VCJT 1 in.

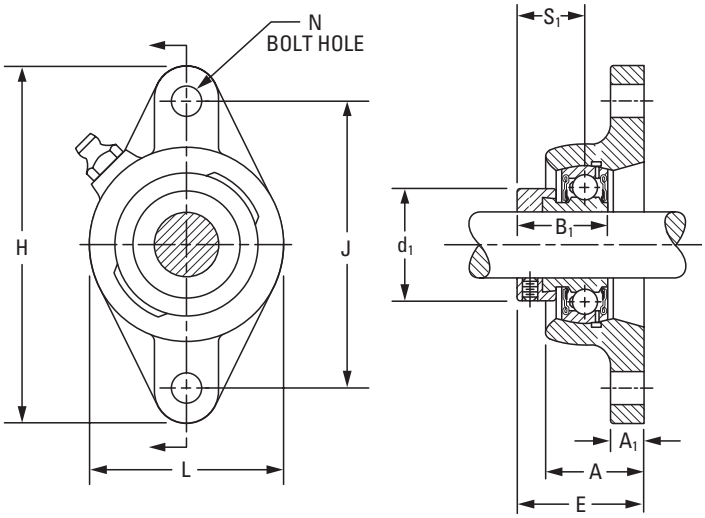

BEARING DATA

Unit	Bearing No.	Dimensions and Load Ratings
VCJT	GRA-RRB	Page A-50

Unit	Shaft Dia.	H	J	L	A	E	N	B_1	A_1	d_1	S_1	Bolt Size	Bearing No.	Collar No.	Housing No.	Unit Wt.
	in. **mm**	**mm** in.	**mm** in.	**mm** in.	**mm** in.	**mm** in.	**mm** in.	**mm** in.	**mm** in.	**mm** in.	**mm** in.	**mm** in.			New (Old)	**kg** lbs.
VCJT VCJT VCJT	½ ⅝ **17**	**98.4** 3 7/8	**76.2** 3	**53.9** 2 1/8	**23.6** 0.929	**39.3** 1.548	**10.7** 27/64	**28.6** 1 1/8	**10.3** 13/32	**28.1** 1.105	**22.2** 7/8	**10** 3/8	GRA008RRB GRA010RRB GRAE17RRB	S1008K S1010K SE17K	T-40219 (T-22244P)	**0.590** 1.30
VCJT VCJT	¾ **20**	**111.9** 4 13/32	**89.7** 3 17/32	**60.3** 2 3/8	**27.8** 1.094	**43.3** 1.706	**9.9** 25/64	**31.0** 1 7/32	**11.1** 7/16	**32.8** 1.292	**23.4** 59/64	**10** 3/8	GRA012RRB GRAE20RRB	S1012K SE20K	T-40220 (T-21409P)	**0.518** 1.44
VCJT VCJT VCJT VCJT	7/8 15/16 1 **25**	**123.8** 4 7/8	**99.2** 3 29/32	**69.8** 2 3/4	**27.9** 1.100	**43.2** 1.701	**11.5** 29/64	**31.0** 1 7/32	**11.1** 7/16	**23.9** 1.480	**23.4** 59/64	**10** 3/8	GRA014RRB GRA015RRB GRA100RRB GRAE25RRB	S1014K S1015K S1100K SE25K	T-40221 (T-21412P)	**0.740** 1.63
VCJT VCJT VCJT VCJT	1 1/8 1 3/16 1 1/4 S **30**	**141.3** 5 9/16	**116.7** 4 19/32	**79.4** 3 1/8	**29.9** 1.178	**47.1** 1.856	**11.5** 29/64	**35.7** 1 13/32	**11.9** 15/32	**43.7** 1.730	**27.0** 1 1/16	**10** 3/8	GRA102RRB GRA103RRB GRA103RRB2 GRAE30RRB	S1102K S1103K S1103K3 SE30K	T-40222 (T-21548P)	**1.026** 2.26
VCJT VCJT VCJT VCJT	1 1/4 1 3/8 1 7/16 **35**	**155.6** 6 1/8	**130.2** 5 1/8	**92.1** 3 5/8	**31.8** 1.254	**50.5** 1.989	**13.1** 33/64	**38.9** 1 17/32	**11.9** 15/32	**53.6** 2.112	**29.4** 1 5/32	**12** ½	GRA104RRB GRA106RRB GRA107RRB GRAE35RRB	S1104K S1106K S1107K SE35K	T-40223 (T-21414)	**1.362** 3.00
VCJT VCJT	1 ½ **40**	**171.4** 6 3/4	**143.6** 5 21/32	**104.7** 4 1/8	**38.1** 1.500	**56.9** 2.243	**13.1** 33/64	**43.7** 1 23/32	**12.7** ½	**58.2** 2.292	**32.5** 1 9/32	**12** ½	GRA108RRB GRAE40RRB	S1108KT SE40K	T-40224 (T-22529)	**2.075** 4.57
VCJT VCJT VCJT VCJT	1 5/8 1 11/16 1 3/4 **45**	**179.4** 7 1/16	**148.0** 5 27/32	**111.1** 4 3/8	**38.9** 1.531	**57.0** 2.244	**13.1** 33/64	**43.7** 1 23/32	**12.7** ½	**63.0** 2.480	**32.5** 1 9/32	**12** ½	GRA110RRB GRA111RRB GRA112RRB GRAE45RRB	S1110K S1111K S1112K SE45K	T-40225 (T-21416)	**2.229** 4.91
VCJT VCJT VCJT VCJT	1 7/8 1 15/16 2 S **50**	**188.9** 7 7/16	**157.2** 6 3/16	**115.8** 4 9/16	**42.9** 1.688	**61.0** 2.400	**17.1** 43/64	**43.7** 1 23/32	**12.7** ½	**69.3** 2.730	**32.5** 1 9/32	**16** ⅝	GRA114RRB GRA115RRB GRA115RRB2 GRAE50RRB	S1114K S1115K S1115K2 SE50K	T-40226 (T-21418)	**2.492** 5.49
VCJT VCJT VCJT	2 2 3/16 **55**	**215.9** 8 1/2	**184.1** 7 1/4	**127.0** 5	**46.8** 1.844	**67.9** 2.672	**17.1** 43/64	**48.4** 1 29/32	**16.7** 21/32	**75.7** 2.980	**36.5** 2 7/16	**16** ⅝	GRA200RRB GRA203RRB GRAE55RRB	S1200K S1203K SE55K	T-40227 (T-23788)	**3.092** 6.81

NOTE: Shaft diameter with an S = smaller housing.

YCJT INDUSTRIAL SET SCREW SERIES

- Incorporates Shaft Guarding Technology, which reduces replacement time, provides shaft protection and prolongs the life of the shaft.
- This series has the same design as the YCJ series, but is mounted with two bolts instead of four.
- All units are equipped with GY-KRRB wide inner ring, set screw bearings.
- The spherical outside diameter mounted in the corresponding machined housings seats provides the initial self-alignment.
- The units are factory-prelubricated. A grease fitting is provided for relubrication.
- Safety end caps are available for selected sizes.

Suggested shaft tolerances:

1/2 in. – 1 15/16 in., nominal to -0.013 mm, -0.0005 in.;
2 in. – 2 3/16 in., nominal to -0.025 mm, -0.0010 in.

To order, specify UNIT and SHAFT DIAMETER.

Example: YCJT 1 7/16 in.

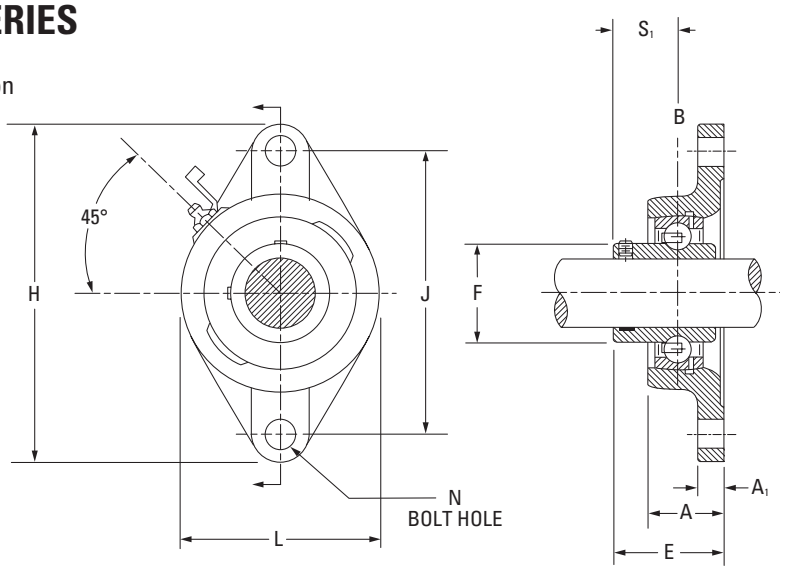

BEARING DATA

Unit	Bearing No.	Dimensions and Load Ratings
YCJT	GY-KRRB	Page A-44

Unit	Shaft Dia.	H	J	L	A	E	B	A_1	F	N	S_1	Bolt Size	Bearing No.
	in. **mm**	**mm** in.	**mm** in.	**mm** in.	**mm** in.	**mm** in.	**mm** in.	**mm** in.	**mm** in.	**mm** in.	**mm** in.	**mm** in.	
YCJT	1/2	**98.4**	**76.2**	**54.00**	**23.6**	**32.90**	**27.40**	**11.1**	**23.9**	**10.0**	**15.9**	**10**	GY1008KRRB
YCJT	5/8	3 7/8	3	2 1/8	0.929	1.296	1 5/64	7/16	0.941	27/64	5/8	3/8	GY1010KRRB
YCJT	**17**												GYE17KRRB
YCJT SGT	3/4	**111.9**	**89.7**	**60.30**	**27.8**	**38.40**	**31.80**	**11.1**	**27.6**	**10.0**	**19.1**	**10**	GY1012KRRB SGT
YCJT SGT	**20**	4 13/32	3 17/32	2 3/8	1.094	1.513	1 1/4	7/16	1.085	27/64	3/4	3/8	GYE20KRRB SGT
YCJT SGT	7/8												GY1014KRRB SGT
YCJT SGT	15/16	**123.8**	**99.2**	**69.90**	**27.9**	**40.00**	**34.90**	**12.7**	**33.8**	**11.5**	**20.6**	**12**	GY1015KRRB SGT
YCJT SGT	1	4 7/8	3 29/32	2 3/4	1.100	1.575	1 3/8	1/2	1.331	29/64	13/16	1/2	GY1100KRRB SGT
YCJT SGT	**25**												GYE25KRRB SGT
YCJT SGT	1 1/8												GY1102KRRB SGT
YCJT SGT	1 3/16	**141.3**	**116.7**	**79.45**	**29.9**	**43.46**	**39.29**	**13.5**	**40.3**	**11.5**	**23.4**	**12**	GY1103KRRB SGT
YCJT	1 1/4 S	5 9/16	4 19/32	3 1/8	1.178	1.711	1 35/64	17/32	1.587	29/64	59/64	1/2	GY1103KRRB3
YCJT SGT	**30**												GYE30KRRB SGT
YCJT SGT	1 1/4												GY1104KRRB SGT
YCJT SGT	1 3/8	**155.6**	**130.2**	**92.10**	**31.8**	**48.95**	**45.20**	**13.5**	**46.8**	**13.0**	**27.9**	**12**	GY1106KRRB SGT
YCJT SGT	1 7/16	6 1/8	5 1/8	3 5/8	1.254	1.927	1 25/32	17/32	1.843	33/64	1 1/10	1/2	GY1107KRRB SGT
YCJT SGT	**35**												GYE35KRRB SGT
YCJT SGT	1 1/2	**171.5**	**143.7**	**104.80**	**38.1**	**54.40**	**49.20**	**14.3**	**52.2**	**13.0**	**30.2**	**12**	GY1108KRRB SGT
YCJT SGT	**40**	6 3/4	5 21/32	4 1/8	1.500	2.141	1 15/16	9/16	2.057	33/64	1 3/16	1/2	GYE40KRRB SGT
YCJT SGT	1 5/8												GY1110KRRB SGT
YCJT SGT	1 11/16	**179.4**	**148.4**	**111.10**	**38.9**	**55.52**	**50.40**	**14.3**	**57.9**	**13.0**	**31.4**	**12**	GY1111KRRB SGT
YCJT SGT	1 3/4	7 1/16	5 27/32	4 3/8	1.531	2.186	1 63/64	9/16	2.279	33/64	1 15/64	1/2	GY1112KRRB SGT
YCJT SGT	**45**												GYE45KRRB SGT
YCJT SGT	1 15/16	**188.9**	**157.2**	**115.90**	**42.9**	**60.70**	**51.60**	**14.3**	**62.8**	**17.0**	**32.5**	**12**	GY1115KRRB SGT
YCJT	2 S	7 7/16	6 3/16	4 9/16	1.688	2.390	2 1/32	9/16	2.473	43/64	1 9/32	1/2	GY1115KRRB3
YCJT SGT	**50**												GYE50KRRB SGT
YCJT SGT	2	**215.9**	**184.2**	**127.00**	**46.8**	**64.70**	**55.60**	**16.7**	**69.7**	**17.0**	**33.3**	**16**	GY1200KRRB SGT
YCJT SGT	2 3/16	8 1/2	7 1/4	5	1.844	2.547	2 3/16	21/32	2.745	43/64	1 5/16	5/8	GY1203KRRB SGT
YCJT SGT	**55**												GYE55KRRB SGT

NOTE: Shaft diameter with an S = smaller housing.

SCJT STANDARD SERIES

- This series has the same construction and design as SCJ type, but is mounted with two bolts instead of four.
- This series is assembled with GYA-RRB bearings with positive-contact, land-riding seals and set screw locking.
- The units are factory-prelubricated. A grease fitting is provided for relubrication.

Suggested shaft tolerances:

½ in. – 1 15/16 in., nominal to -0.013 mm, -0.0005 in.;
2 in. – 2 3/16 in., nominal to -0.025 mm, -0.0010 in.

To order, specify UNIT and SHAFT DIAMETER.

Example: SCJT 1 in.

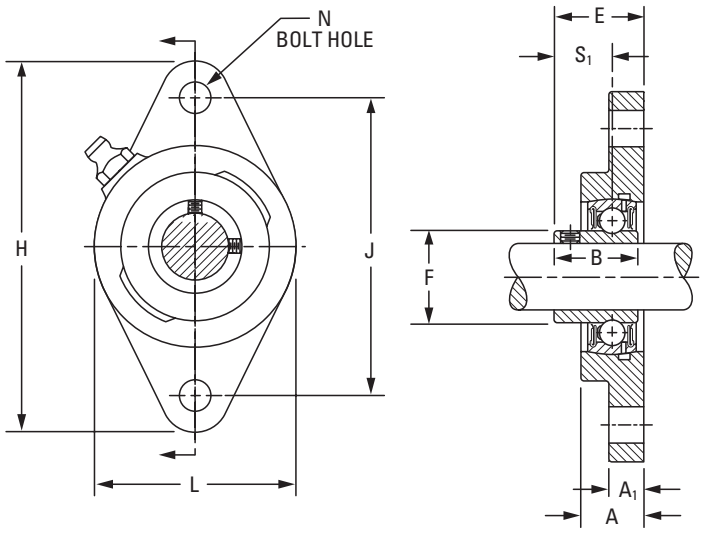

BEARING DATA

Unit	Bearing No.	Dimensions and Load Ratings
SCJT	GYA-RRB	Page A-54

Unit	Shaft Dia.	H	J	L	A	E	N	B	A_1	F	S_1	Bolt Size	Bearing No.	Housing No.	Unit Wt.
	in. **mm**	**mm** in.	**mm** in.	**mm** in.	**mm** in.	**mm** in.	**mm** in.	**mm** in.	**mm** in.	**mm** in.	**mm** in.	**mm** in.			**kg** lbs.
SCJT	1/2												GYA008RRB		
SCJT	5/8	**98.4** 3 7/8	**76.20** 3	**60.3** 2 3/8	**17.9** 45/64	**25.4** 1	**9.9** 25/64	**23.8** 15/16	**11.1** 7/16	**24.6** 31/32	**15.9** 5/8	**10** 3/8	GYA010RRB	T-40136	**0.34** 0.75
SCJT	**17**												GYAE17RRB		
SCJT	3/4	**111.9** 4 13/32	**89.69** 3 17/32	**65.1** 2 9/16	**19.0** 3/4	**28.6** 1 1/8	**9.9** 25/64	**27.0** 1 1/16	**11.1** 7/16	**29.0** 1 9/64	**18.3** 23/32	**10** 3/8	GYA012RRB	T-40138	**0.43** 0.94
SCJT	**20**												GYAE20RRB		
SCJT	7/8												GYA014RRB		
SCJT	15/16	**123.8** 4 7/8	**98.82** 3 57/64	**69.9** 2 3/4	**19.8** 25/32	**29.8** 1 11/64	**11.9** 15/32	**28.2** 1 7/64	**11.1** 7/16	**33.7** 1 21/64	**19.4** 49/64	**10** 3/8	GYA015RRB	T-40140	**0.48** 1.07
SCJT	1												GYA100RRB		
SCJT	**25**												GYAE25RRB		
SCJT	1 1/8												GYA102RRB		
SCJT	1 3/16	**141.3** 5 9/16	**116.68** 4 19/32	**79.4** 3 1/8	**21.4** 27/32	**34.1** 1 11/32	**11.5** 29/64	**32.5** 1 9/32	**13.5** 17/32	**40.1** 1 37/64	**23.0** 29/32	**10** 3/8	GYA103RRB	T-40142	**0.72** 1.58
SCJT	1 1/4 S												GYA103RRB3		
SCJT	**30**												GYAE30RRB		
SCJT	1 1/4												GYA104RRB		
SCJT	1 3/8	**155.6** 6 1/8	**130.18** 5 1/8	**92.1** 3 5/8	**24.6** 31/32	**38.1** 1 1/2	**13.1** 33/64	**36.5** 1 7/16	**14.3** 9/16	**46.8** 1 27/32	**25.8** 1 1/64	**12** 1/2	GYA106RRB	T-40144	**1.08** 2.37
SCJT	1 7/16												GYA107RRB		
SCJT	**35**												GYAE35RRB		
SCJT	1 1/2	**171.5** 6 3/4	**143.67** 5 21/32	**104.8** 4 1/8	**26.2** 1 1/32	**40.9** 1 39/64	**13.1** 33/64	**39.3** 1 35/64	**14.3** 9/16	**52.4** 2 1/16	**27.8** 1 3/32	**12** 1/2	GYA108RRB	T-40146	**1.97** 4.34
SCJT	**40**												GYAE40RRB		
SCJT	1 5/8												GYA110RRB		
SCJT	1 11/16	**179.4** 7 1/16	**148.00** 5 27/32	**111.1** 4 3/8	**28.6** 1 1/8	**43.6** 1 23/32	**13.1** 33/64	**42.1** 1 21/32	**15.8** 5/8	**57.9** 2 5/32	**28.6** 1 7/8	**12** 1/2	GYA111RRB	T-40170	**2.03** 4.48
SCJT	1 3/4												GYA112RRB		
SCJT	**45**												GYAE45RRB		
SCJT	1 15/16	**189.9** 7 7/16	**157.16** 6 3/16	**115.8** 4 9/16	**28.6** 1 1/8	**46.0** 1 13/16	**17.1** 43/64	**44.4** 1 3/4	**16.6** 21/32	**62.7** 2 15/32	**30.9** 1 7/32	**16** 5/8	GYA115RRB	T-40172	**2.26** 4.98
SCJT	2 S												GYA115RRB2		
SCJT	**50**												GYAE50RRB		
SCJT	2	**215.9** 8 1/2	**184.15** 7 1/4	**127.0** 5	**30.9** 1 7/32	**48.0** 1 57/64	**17.1** 43/64	**46.4** 1 53/64	**18.2** 23/32	**69.8** 2 3/4	**31.7** 1 1/4	**16** 5/8	GYA200RRB	T-40174	**2.79** 6.14
SCJT	2 3/16												GYA203RRB		
SCJT	**55**												GYAE55RRB		

NOTE: Shaft diameter with an S = smaller housing.

FLCT STANDARD SERIES

- These versatile power-transmission units are designed to provide sturdy shaft support in minimum space at minimum cost.
- The space-saving, two-bolt unit mounts flush against the frame.
- The bolt-hole spacing and size is the same as the pressed-steel flangette unit.
- The series is equipped with RA-RRB extended inner ring ball bearings with positive-contact, land-riding seals.
- The series is permanently prelubricated.

Suggested shaft tolerances:

½ in. – 1 7/16 in., nominal to -0.013 mm, -0.0005 in.;

To order, specify UNIT and SHAFT DIAMETER.

Example: FLCT 1 3/16 in.

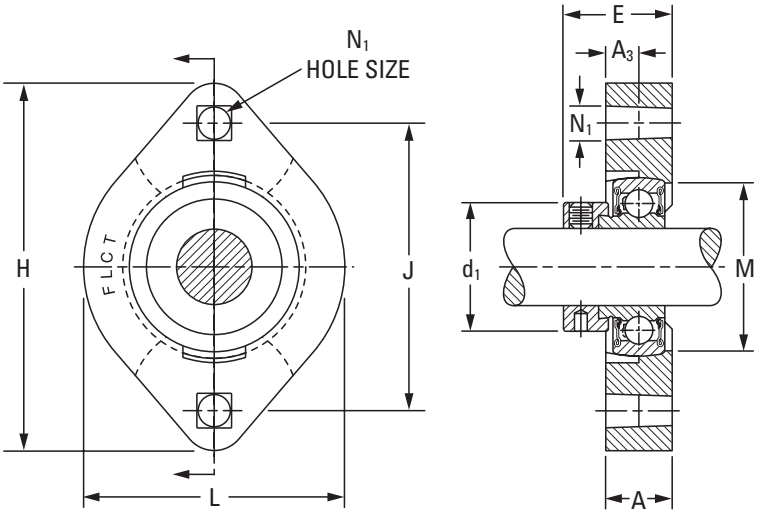

BEARING DATA

Unit	Bearing No.	Dimensions and Load Ratings
FLCT	RA-RRB	Page A-48

Unit	Shaft Dia.	H	J	L	E	A	A_3	N_1 Sq.	d_1	M	Bolt Size	Bearing No.	Collar No.	Housing No.	Unit Wt.
	in. **mm**	**mm** in.	**mm** in.	**mm** in.	**mm** in.	**mm** in.	**mm** in.	**mm** in.	**mm** in.	**mm** in.	**mm** in.				**kg** lbs.
FLCT	1/2											RA008RRB	S1008K		
FLCT	5/8	**81.0** 3 3/16	**63.5** 2 1/2	**58.7** 2 5/16	**30.2** 1 3/16	**14.7** 37/64	**7.1** 9/32	**7.1** 9/32	**28.6** 1 1/8	**38.1** 1 1/2	**6** 1/4	RA010RRB	S1010K	T-34124	**0.322** 0.71
FLCT	**17**											RAE17RRB	SE17K		
FLCT	3/4	**90.5** 3 9/16	**71.4** 2 13/16	**66.7** 2 5/8	**32.9** 1 19/64	**17.1** 43/64	**8.7** 11/32	**8.7** 11/32	**33.3** 1 5/16	**45.2** 1 25/32	**8** 5/16	RA012RRB	S1012K	T-34122	**0.445** 0.98
FLCT	**20**											RAE20RRB	SE20K		
FLCT	7/8											RA014RRB	S1014K		
FLCT	15/16	**95.2** 3 3/4	**76.2** 3	**71.0** 2 51/64	**34.5** 1 23/64	**17.5** 11/16	**8.7** 11/32	**8.7** 11/32	**38.1** 1 1/2	**50.4** 1 63/64	**8** 5/16	RA015RRB	S1015K	T-33753	**0.499** 1.10
FLCT	1											RA100RRB	S1100K		
FLCT	**25**											RAE25RRB	SE25K		
FLCT	1 1/8											RA102RRB	S1102K		
FLCT	1 3/16	**112.7** 4 7/16	**90.5** 3 9/16	**84.1** 3 5/16	**38.5** 1 33/64	**20.6** 13/16	**10.3** 13/32	**10.3** 13/32	**44.4** 1 3/4	**59.5** 2 11/32	**10** 3/8	RA103RRB	S1103K	T-34120	**0.835** 1.84
FLCT	1 1/4 S											RA103RRB2	S1103K3		
FLCT	**30**											RAE30RRB	SE30K		
FLCT	1 1/4											RA104RRB	S1104K		
FLCT	1 3/8	**125.4** 4 15/16	**100.0** 3 15/16	**93.7** 3 11/16	**41.1** 1 21/32	**22.2** 7/8	**11.1** 7/16	**10.3** 13/32	**54.0** 2 1/8	**69.5** 2 47/64	**10** 3/8	RA106RRB	S1106K	T-34118	**1.075** 2.37
FLCT	1 7/16											RA107RRB	S1107K		
FLCT	**35**											RAE35RRB	SE35K		

NOTE: Shaft diameter with an S = smaller housing.

RFC INDUSTRIAL PILOTED-SERIES CONCENTRIC COLLAR

- The piloted flange cartridges ensure accurate mounting fits and provide better support for heavy loads.
- The cast-iron units are suited for applications such as material handling, industrial conveyor equipment, and farm and construction equipment.
- This series is assembled with R-seal (GC-KRRB) bearings with a concentric-locking collar.
- The units are factory-prelubricated. A grease fitting is provided for relubrication if required.

Suggested shaft tolerances:

1/2 in. – 1 15/16 in., nominal to -0.013 mm, -0.0005 in.;
2 in. – 2 3/16 in., nominal to -0.025 mm, -0.0010 in.

To order, specify UNIT and SHAFT DIAMETER.

Example: RFC 1 7/16 in.

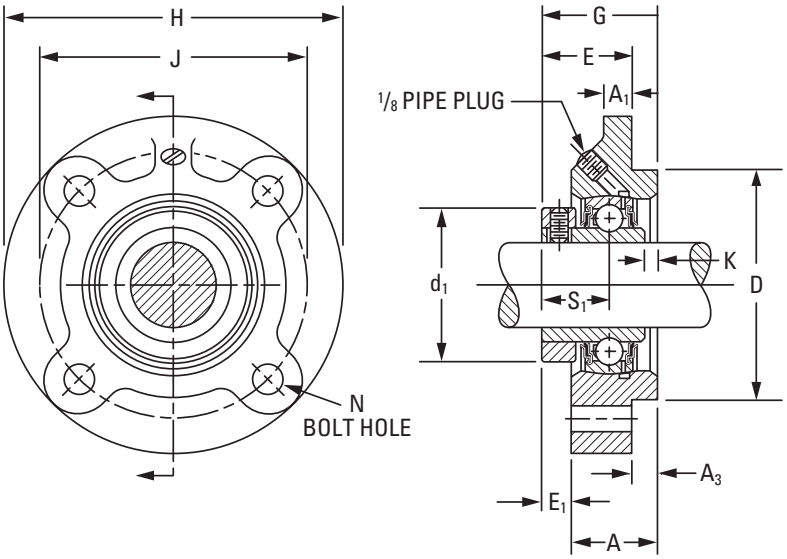

BEARING DATA

Unit	Bearing No.	Dimensions and Load Ratings
RFC	GC-KRRB	Page A-40

Unit	Shaft Dia.	D	J	H	S_1	K	N	G	A	E_1	A_3	E	A_1	d_1	Bolt Size	Bearing No.	Collar No.	Housing No.	Unit Wt.
	in.	**mm** in.	**mm** in.	**mm** in.	**mm** in.	**mm** in.	**mm** in.	**mm** in.	**mm** in.	**mm** in.	**mm** in.	**mm** in.	**mm** in.	**mm** in.	**mm** in.				**kg** lbs.
RFC	1	**76.20** 3.000	**92.1** 3 5/8	**111.1** 4 3/8	**20.2** 51/64	**3.6** 9/64	**10.3** 13/32	**37.7** 1 31/64	**28.2** 1 7/64	**9.5** 3/8	**6.4** 1/4	**31.4** 1 15/64	**9.5** 3/8	**44.4** 1 3/4	**10** 3/8	GC1100KRRB	C205	T-27031	**1.152** 2.54
RFC RFC RFC	1 1/8 1 3/16 1 1/4 S	**85.72** 3.375	**104.8** 4 1/8	**127.0** 5	**22.6** 57/64	**3.6** 9/64	**11.9** 15/32	**40.9** 1 39/64	**30.6** 1 13/64	**10.3** 13/32	**10.7** 27/64	**30.2** 1 3/16	**9.5** 3/8	**52.4** 2 1/16	**10** 3/8	GC1102KRRB GC1103KRRB GC1103KRRB3	C206	T-27021	**1.742** 3.84
RFC RFC RFC	1 1/4 1 3/8 1 7/16	**92.08** 3.625	**111.1** 4 3/8	**133.4** 5 1/4	**25.4** 1	**3.2** 1/8	**11.9** 15/32	**44.4** 1 3/4	**34.1** 1 11/32	**10.3** 13/32	**11.9** 15/32	**32.5** 1 9/32	**12.7** 1/2	**59.5** 2 11/32	**10** 3/8	GC1104KRRB GC1106KRRB GC1107KRRB	C207	T-26730	**1.864** 4.11
RFC	1 1/2	**92.08** 3.625	**111.1** 4 3/8	**133.4** 5 1/4	**27.4** 1 5/64	**4.8** 3/16	**11.9** 15/32	**48.8** 1 59/64	**38.1** 1 1/2	**10.7** 27/64	**11.9** 15/32	**36.9** 1 29/64	**12.7** 1/2	**68.3** 2 11/16	**10** 3/8	GC1108KRRB	C208	T-26587	**2.141** 4.72
RFC RFC	1 11/16 1 3/4	**107.95** 4.250	**130.2** 5 1/8	**155.6** 6 1/8	**29.4** 1 5/32	–	**13.5** 17/32	**46.8** 1 27/32	**34.1** 1 11/32	**12.7** 1/2	**11.9** 15/32	**34.9** 1 3/8	**11.5** 29/64	**73.0** 2 7/8	**12** 1/2	GC1111KRRB GC1112KRRB	C209	T-27276	**2.817** 6.21
RFC	1 15/16	**114.30** 4.500	**136.5** 5 3/8	**161.9** 6 3/8	**30.2** 1 3/16	**6.4** 1/4	**13.5** 17/32	**54.8** 2 5/32	**42.9** 1 11/16	**11.9** 15/32	**15.9** 5/8	**38.9** 1 17/32	**12.7** 1/2	**79.4** 3 1/8	**12** 1/2	GC1115KRRB	C210	T-26743	**3.211** 7.08
RFC RFC	2 2 3/16	**127.00** 5.000	**152.4** 6	**181.0** 7 1/8	**33.3** 1 5/16	**7.1** 9/32	**15.1** 19/32	**61.1** 2 13/32	**44.4** 1 3/4	**16.7** 21/32	**22.2** 7/8	**38.9** 1 17/32	**12.7** 1/2	**88.9** 3 1/2	**12** 1/2	GC1200KRRB GC1203KRRB	C211	T-28287	**4.082** 9.00

NOTE: Shaft diameter with an S = smaller housing.

RC SERIES

- The RC series is convenient for mounting in straight-bore housings.
- The bearing features a self-locking collar and spherical outside diameter fitted to a corresponding spherical seat in the cartridge that provides self-alignment.
- The unit is equipped with a G-KRRB (R-seal) bearing.

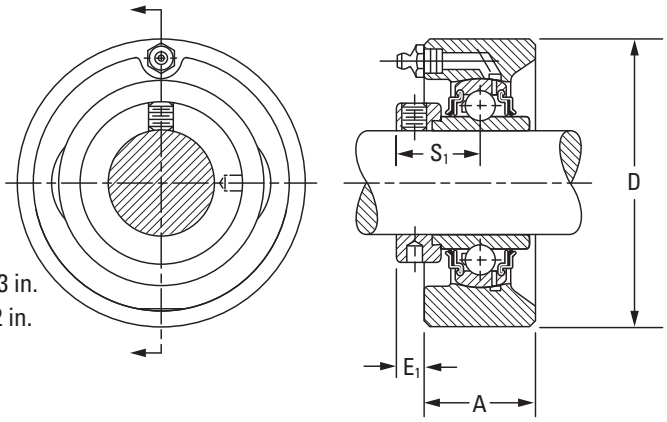

Suggested housing bore:

Shaft Rotating: nominal +.025 mm to +.076 mm, +.001 in. to +.003 in.

Shaft Stationary: nominal +.00 mm to -.050 mm, +.000 in. to -.002 in.

Avoid excessive tightening of anchor bolts.

Suggested shaft tolerances:

1/2 in. – 1 15/16 in., nominal to -0.013 mm, -0.0005 in.;

2 in. – 2 7/16 in., nominal to -0.025 mm, -0.0010 in.

To order, specify UNIT and SHAFT DIAMETER.

Example: RC 1 3/16 in.

BEARING DATA

Unit	Bearing No.	Dimensions and Load Ratings
RC	G-KRRB	Page A-34

Unit[1]	Shaft Dia.	D	A	E_1	S_1	Bearing No.	Collar No.	Housing No.	Unit Wt.
	in. **mm**	**mm** in.	**mm** in.	**mm** in.	**mm** in.				**kg** lbs.
RC	1/2					G1008KRRB	S1008K		
RC	5/8	**68.27**	**30.2**	**8.3**	**23.4**	G1010KRRB	S1010K	T-16793	**0.549**
RC	11/16	2 11/16	1 3/16	21/64	59/64	G1011KRRB	S1011K		1.21
RC	**17**					GE17KRRB	SE17K		
RC	3/4	**74.61**	**36.5**	**8.3**	**26.6**	G1012KRRB	S1012K	T-16795	**0.804**
RC	**20**	2 15/16	1 7/16	21/64	1 3/64	GE20KRRB	SE20K		1.77
RC	7/8					G1014KRRB	S1014K		
RC	15/16	**79.38**	**38.1**	**7.9**	**27.0**	G1015KRRB	S1015K	T-16797	**0.876**
RC	1	3 1/8	1 1/2	5/16	1 1/16	G1100KRRB	S1100K		1.93
RC	**25**					GE25KRRB	SE25K		
RC	1 1/16					G1101KRRB	S1101K		
RC	1 1/8	**88.90**	**38.1**	**11.1**	**30.2**	G1102KRRB	S1102K	T-16798	**1.171**
RC	1 3/16	3 1/2	1 1/2	7/16	1 3/16	G1103KRRB	S1103K		2.58
RC	**30**					GE30KRRB	SE30K		
RC	1 1/4					G1104KRRB	S1104K		
RC	1 5/16					G1105KRRB	S1105K		
RC	1 3/8	**98.43**	**39.7**	**12.7**	**32.5**	G1106KRRB	S1106K	T-16686	**1.448**
RC	1 7/16	3 7/8	1 9/16	1/2	1 9/32	G1107KRRB	S1107K		3.19
RC	**35**					GE35KRRB	SE35K		
RC	1 1/2					G1108KRRB	S1108KT		
RC	1 9/16	**106.36**	**44.4**	**12.7**	**34.9**	G1109KRRB	S1109KT	T-16800	**1.870**
RC	**40**	4 3/16	1 3/4	1/2	1 3/8	GE40KRRB	SE40K		4.12
RC	1 5/8					G1110KRRB	S1110K		
RC	1 11/16	**111.13**	**44.4**	**12.7**	**34.9**	G1111KRRB	S1111K	T-16687	**1.970**
RC	1 3/4	4 3/8	1 3/4	1/2	1 3/8	G1112KRRB	S1112K		4.34
RC	**45**					GE45KRRB	SE45K		
RC	1 7/8	**115.89**	**52.4**	**11.9**	**38.1**	G1114KRRB	S1114K	T-16802	**2.452**
RC	1 15/16	4 9/16	2 1/16	15/32	1 1/2	G1115KRRB	S1115K		5.40
RC	**50**					GE50KRRB	SE50K		
RC	2					G1200KRRB	S1200K		
RC	2 1/8	**125.41**	**58.7**	**14.3**	**43.7**	G1202KRRB	S1202K	T-16804	**3.164**
RC	2 3/16	4 15/16	2 5/16	9/16	1 23/32	G1203KRRB	S1203K		6.97
RC	**55**					GE55KRRB	SE55K		
RC	2 7/16	**149.23**	**65.1**	**14.3**	**46.8**	G1207KRRB	S1207K	T-17927	**5.130**
RC	**60**	5 7/8	2 9/16	9/16	1 27/32	GE60KRRB	SE60K		11.30

[1]All units have 1/4-28 grease fittings.

MALLEABLE-IRON FLANGED UNITS

GVFD, GVFDR RELUBRICATABLE SERIES – VFD, VFDR NON-RELUBRICATABLE SERIES

- The malleable-iron flange cartridges provide self-alignment and rigid support for medium-duty applications.
- The mounting bolt holes are interchangeable with pressed-steel flangette units of corresponding size.

BEARING DATA

Unit	Bearing No.	Dimensions and Load Ratings
VFD, VFDR	RA-RRB	Page A-48
GVFD, GVFDR	GRA-RRB	Page A-50

Suggested shaft tolerances: nominal to -0.013 mm, -0.0005 in.

To order, specify UNIT and SHAFT DIAMETER.

For the non-relubricatable series, omit the G prefix on the unit and bearing number.

Example: VFD 1 3/16 in. or VFDR 1 3/16 in.; GVFD 1 3/16 in. or GVFDR 1 3/16 in.

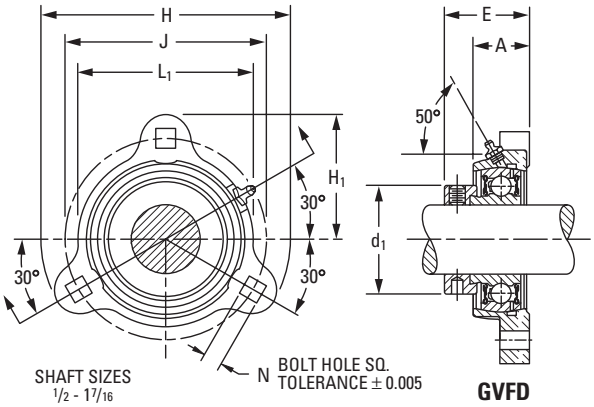

GVFD

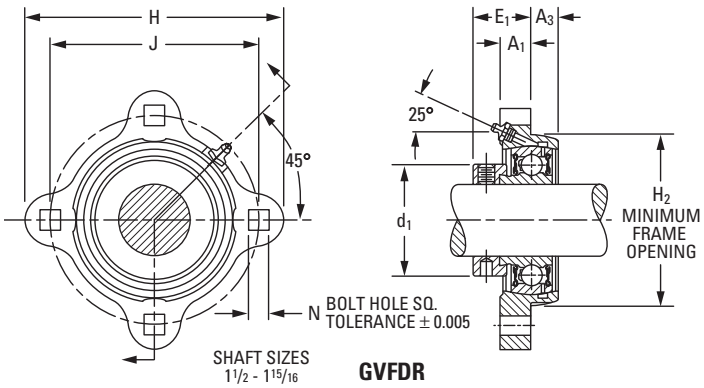

GVFDR

Unit		Shaft Dia.	H_1	L_1	H	J	N	H_2	E	A	E_1	A_3	A_1	d_1	Bearing No.	Collar No.	Unit Wt.
Face Mounted	Reverse Mounted	in. **mm**	**mm** in.	**mm** in.	**mm** in.	**mm** in.	**mm** in.	**mm** in.	**mm** in.	**mm** in.	**mm** in.	**mm** in.	**mm** in.	**mm** in.			**kg** lbs.
RELUBRICATABLE SERIES[1]																	
GVFD[2]	GVFDR[2]	1/2	**40.5**	**53.2**	**81.0**	**63.5**	**7.1**	**47.6**	**31.8**	**17.5**	**22.2**	**7.9**	**9.5**	**28.6**	GRA008RRB	S1008K	**2.63**
GVFD[2]	GVFDR[2]	5/8	1 19/32	2 3/32	3 3/16	2 1/2	9/32	1 7/8	1 1/4	11/16	7/8	5/16	3/8	1 1/8	GRA010RRB	S1010K	0.58
GVFD[2]	GVFDR[2]	**17**													GRAE17RRB	SE17K	
GVFD[2]	GVFDR	3/4	**45.2**	**60.3**	**90.5**	**71.4**	**8.7**	**54.8**	**34.1**	**19.8**	**23.4**	**9.1**	**10.7**	**33.3**	GRA012RRB	S1012K	**0.336**
GVFD[2]	GVFDR	**20**	1 25/32	2 3/8	3 9/16	2 13/16	11/32	2 5/32	1 11/32	25/32	59/64	23/64	27/64	1 5/16	GRAE20RRB	SE20K	0.74
GVFD	GVFDR	7/8													GRA014RRB	S1014K	
GVFD	GVFDR	15/16	**47.6**	**66.7**	**95.2**	**76.2**	**8.7**	**60.3**	**34.1**	**19.8**	**23.4**	**9.1**	**10.7**	**38.1**	GRA015RRB	S1015K	**0.386**
GVFD	GVFDR	1	1 7/8	2 5/8	3 3/4	3	11/32	2 3/8	1 11/32	25/32	59/64	23/64	27/64	1 1/2	GRA100RRB	S1100K	0.85
GVFD	GVFDR	**25**													GRAE25RRB	SE25K	
GVFD	GVFDR	1 1/8													GRA102RRB	S1102K	
GVFD	GVFDR	1 3/16	**56.4**	**78.6**	**112.7**	**90.5**	**10.3**	**71.4**	**38.9**	**22.2**	**26.6**	**10.7**	**11.9**	**44.5**	GRA103RRB	S1103K	**0.608**
GVFD	GVFDR	1 1/4 S	2 7/32	3 3/32	4 7/16	3 9/16	13/32	2 13/16	1 17/32	7/8	1 3/64	27/64	15/32	1 3/4	GRA103RRB2	S1103K3	1.34
GVFD	GVFDR	**30**													GRAE30RRB	SE30K	
GVFD	GVFDR	1 1/4													GRA104RRB	S1104K	
GVFD	GVFDR	1 3/8	**61.1**	**88.9**	**122.2**	**100.0**	**10.3**	**81.8**	**42.1**	**23.8**	**29.4**	**11.1**	**12.7**	**54.0**	GRA106RRB	S1106K	**0.821**
GVFD	GVFDR	1 7/16	2 13/32	3 1/2	4 13/16	3 15/16	13/32	3 7/32	1 21/32	15/16	1 5/32	7/16	1/2	2 1/8	GRA107RRB	S1107	1.81
GVFD	GVFDR	**35**													GRAE35RRB	SE35K	
GVFD	GVFDR	1 1/2	**73.8**	**98.4**	**147.6**	**119.1**	**13.5**	**89.7**	**48.4**	**28.6**	**32.5**	**12.7**	**15.9**	**60.3**	GRA108RRB	S1108KT	**1.334**
GVFD	GVFDR	**40**	2 29/32	3 7/8	5 13/16	4 11/16	17/32	3 17/32	1 29/32	1 1/8	1 9/32	1/2	5/8	2 3/8	GRAE40RRB	SE40K	2.94
GVFD	GVFDR	1 5/8													GRA110RRB	S1110K	
GVFD	GVFDR	1 11/16	**74.6**	**107.2**	**149.2**	**120.6**	**13.5**	**96.0**	**48.4**	**28.6**	**32.5**	**12.7**	**15.9**	**63.5**	GRA111RRB	S1111K	**1.361**
GVFD	GVFDR	1 3/4	2 15/16	4 7/32	5 7/8	4 3/4	17/32	3 25/32	1 29/32	1 1/8	1 9/32	1/2	5/8	2 1/2	GRA112RRB	S1112K	3.00
GVFD	GVFDR	**45**													GRAE45RRB	SE45K	
GVFD	GVFDR	1 7/8	**77.8**	**113.5**	**155.6**	**127.0**	**13.5**	**100.8**	**48.4**	**28.6**	**32.5**	**12.7**	**15.9**	**69.8**	GRA114RRB	S1114K	**1.451**
GVFD	GVFDR	1 15/16	3 1/16	4 15/32	6 1/8	5	17/32	3 31/32	1 29/32	1 1/8	1 9/32	1/2	5/8	2 3/4	GRA115RRB	S1115K	3.20
GVFD	GVFDR	**50**													GRAE50RRB	SE50K	

[1]All units have a 1/4-28 grease fitting, except as noted.
[2]10-32 grease fitting.
NOTE: Shaft diameter with an S = smaller housing.

GRFD, GRFDR RELUBRICATABLE SERIES – RFD, RFDR NON-RELUBRICATABLE SERIES

- The malleable-iron flange cartridges provide self-alignment and rigid support for medium-duty applications.

Suggested shaft tolerances: nominal to -0.013 mm, -0.0005 in.

To order, specify UNIT and SHAFT DIAMETER.

For the non-relubricatable series, omit G prefix on unit and bearing number.

Example: GRFD 1 3/16 in. or GRFDR 1 3/16 in.; RFD 1 3/16 in. or RFDR 1 3/16 in.

BEARING DATA

Unit	Bearing No.	Dimensions and Load Ratings
RFD, RFDR	-KRRB	Page A-32
GRFD, GRFDR	G-KRRB	Page A-34

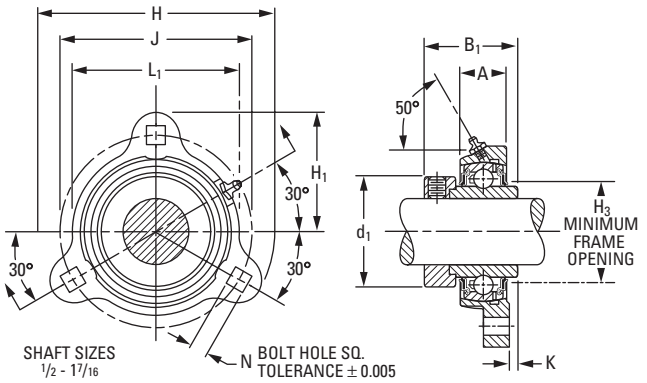

GRFD

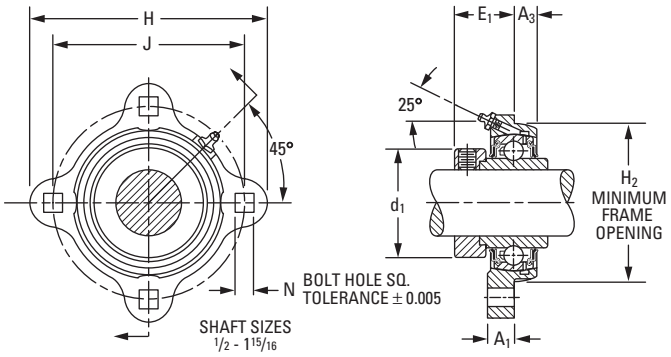

GRFDR

Unit		Shaft Dia.	H_1	L_1	H	J	N	H_2	B_1	A	E_1	A_3	A_1	d_1	H_3	K	Bearing No.	Collar No.	Unit Wt.
Face Mounted	Reverse Mounted	in. **mm**	**mm** in.	**mm** in.	**mm** in.	**mm** in.	**mm** in.	**mm** in.	**mm** in.	**mm** in.	**mm** in.	**mm** in.	**mm** in.	**mm** in.	**mm** in.	**mm** in.			**kg** lbs.
RELUBRICATABLE SERIES[1]																			
GRFD[2]	GRFDR[2]	1/2															G1008KRRB	S1008K	
GRFD[2]	GRFDR[2]	5/8	**40.5**	**53.2**	**81.0**	**63.5**	**7.1**	**47.6**	**37.3**	**17.5**	**23.4**	**7.9**	**9.5**	**28.6**	**29.4**	**4.4**	G1010KRRB	S1010K	**0.259**
GRFD[2]	GRFDR[2]	11/16	1 19/32	2 3/32	3 3/16	2 1/2	9/32	1 7/8	1 15/32	11/16	59/64	5/16	3/8	1 1/8	1 5/32	11/64	G1011KRRB	S1011K	0.57
GRFD[2]	GRFDR[2]	**17**															GE17KRRB	SE17K	
GRFD[2]	GRFDR	3/4	**45.2**	**60.3**	**90.5**	**71.4**	**8.7**	**54.8**	**43.7**	**19.8**	**26.6**	**9.1**	**10.7**	**33.3**	**34.1**	**6.4**	G1012KRRB	S1012K	**0.395**
GRFD[2]	GRFDR	**20**	1 25/32	2 3/8	3 9/16	2 13/16	11/32	2 5/32	1 23/32	25/32	1 3/64	23/64	27/64	1 5/16	1 11/32	1/4	GE20KRRB	SE20K	0.87
GRFD	GRFDR	7/8															G1014KRRB	S1014K	
GRFD	GRFDR	15/16	**47.6**	**66.7**	**95.2**	**76.2**	**8.7**	**60.3**	**44.4**	**19.8**	**27.0**	**9.1**	**10.7**	**38.1**	**38.9**	**6.7**	G1015KRRB	S1015K	**0.463**
GRFD	GRFDR	1	1 7/8	2 5/8	3 3/4	3	11/32	2 3/8	1 3/4	25/32	1 1/16	23/64	27/64	1 1/2	1 17/32	17/64	G1100KRRB	S1100K	1.02
GRFD	GRFDR	**25**															GE25KRRB	SE25K	
GRFD	GRFDR	1 1/16															G1101KRRB	S1101K	
GRFD	GRFDR	1 1/8															G1102KRRB	S1102K	
GRFD	GRFDR	1 3/16	**56.4**	**78.6**	**112.7**	**90.5**	**10.3**	**71.4**	**48.4**	**22.2**	**30.2**	**10.7**	**11.9**	**44.5**	**46.0**	**6.4**	G1103KRRB	S1103K	**6.260**
GRFD	GRFDR	1 1/4 S	2 7/32	3 3/32	4 7/16	3 9/16	13/32	2 13/16	1 29/32	7/8	1 3/16	27/64	15/32	1 3/4	1 13/16	1/4	G1103KRRB3	S1103K3	1.38
GRFD	GRFDR	**30**															GE30KRRB	SE30K	
GRFD	GRFDR	1 1/4															G1104KRRB	S1104K	
GRFD	GRFDR	1 5/16															G1105KRRB	S1105K	
GRFD	GRFDR	1 3/8	**61.1**	**88.9**	**122.2**	**100.0**	**10.3**	**81.8**	**51.2**	**23.8**	**32.5**	**11.1**	**12.7**	**54.0** 2	**53.2**	**6.4**	G1106KRRB	S1106K	**0.857**
GRFD	GRFDR	1 7/16	2 13/32	3 1/2	4 13/16	3 15/16	13/32	3 7/32	2 1/64	15/16	1 9/32	7/16	1/2	1/8	2 3/32	1/4	G1107KRRB	S1107K	1.89
GRFD	GRFDR	**35**															GE35KRRB	SE35K	
GRFD	GRFDR	1 1/2															G1108KRRB	S1108KT	
GRFD	GRFDR	1 9/16	**73.8**	**98.4**	**147.6**	**119.1**	**13.5**	**89.7**	**56.4**	**28.6**	**34.9**	**12.7**	**15.9**	**60.3**	**59.5**	**5.6**	G1109KRRB	S1109KT	**1.138**
GRFD	GRFDR	**40**	2 29/32	3 7/8	5 13/16	4 11/16	17/32	3 17/32	2 7/32	1 1/8	1 3/8	1/2	5/8	2 3/8	2 11/32	7/32	GE40KRRB	SE40K	2.50
GRFD	GRFDR	1 5/8															G1110KRRB	S1110K	
GRFD	GRFDR	1 11/16	**74.6**	**107.2**	**149.2**	**120.6**	**13.5**	**96.0**	**56.4**	**28.6**	**34.9**	**12.7**	**15.9**	**63.5**	**65.1**	**5.6**	G1111KRRB	S1111K	**1.488**
GRFD	GRFDR	1 3/4	2 15/16	4 7/32	5 7/8	4 3/4	17/32	3 25/32	2 7/32	1 1/8	1 3/8	1/2	5/8	2 1/2	2 9/16	7/32	G1112KRRB	S1112K	3.28
GRFD	GRFDR	**45**															GE45KRRB	SE45K	
GRFD	GRFDR	1 7/8															G1114KRRB	S1114K	
GRFD	GRFDR	1 15/16	**77.8**	**113.5**	**155.6**	**127.0**	**13.5**	**100.8**	**62.7**	**28.6**	**38.1**	**12.7**	**15.9**	**69.8** 2	**69.8**	**8.7**	G1115KRRB	S1115K	**1.692**
GRFD	GRFDR	**50**	3 1/16	4 15/32	6 1/8	5	17/32	3 31/32	2 15/32	1 1/8	1 1/2	1/2	5/8	3/4	2 3/4	11/32	GE50KRRB	SE50K	3.73

[1]All units have a 1/4-28 grease fitting, except as noted.
[2]10-32 grease fitting.
NOTE: Shaft diameter with an S = smaller housing.

GVFTD, GVFTDR RELUBRICATABLE SERIES – VFTD, VFTDR NON-RELUBRICATABLE SERIES

- The malleable-iron flange cartridges provide self-alignment and rigid support for medium-duty applications.

Suggested shaft tolerances: nominal to -0.013 mm, -0.0005 in.

To order, specify UNIT and SHAFT DIAMETER.

For the non-relubricatable series, omit G prefix on unit and bearing number.

Example: VFTD 1 3/16 in. or VFTDR 1 3/16 in.; GVFTD 1 3/16 in. or GVFTDR 1 3/16 in.

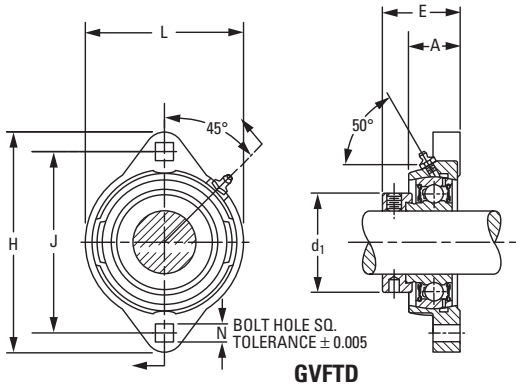

GVFTD

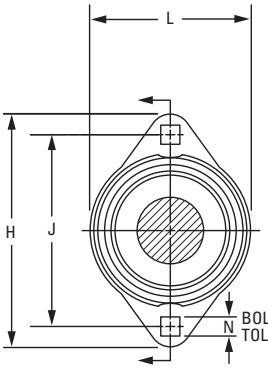

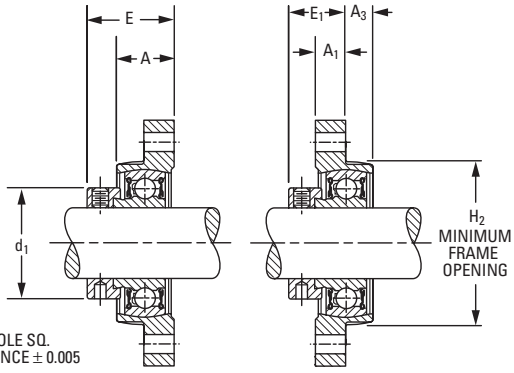

VFTD VFTDR

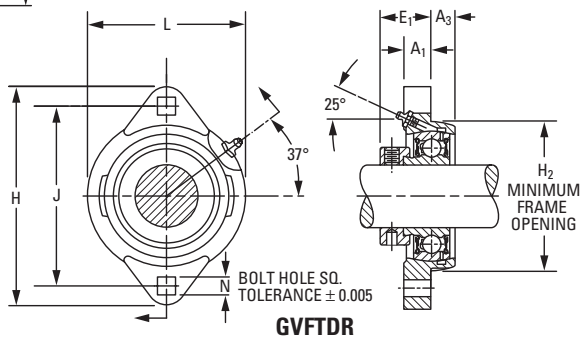

GVFTDR

BEARING DATA

Unit	Bearing No.	Dimensions and Load Ratings
VFTD, VFTDR	RA-RRB	Page A-48
GVFTD, GVFTDR	GRA-RRB	Page A-50

Unit		Shaft Dia.	H	J	L	N	H_2	E	A	E_1	A_3	A_1	d_1	Bearing No.	Collar No.	Unit Wt.
Face Mounted	Reverse Mounted	in. **mm**	**mm** in.	**mm** in.	**mm** in.	**mm** in.	**mm** in.	**mm** in.	**mm** in.	**mm** in.	**mm** in.	**mm** in.	**mm** in.			**kg** lbs.
RELUBRICATABLE SERIES[1]																
GVFTD	GVFTDR	1/2												GRA008RRB	S1008K	
GVFTD	GVFTDR	5/8	**81.0** 3 3/16	**63.5** 2 1/2	**53.2** 2 3/32	**7.1** 9/32	**47.6** 1 7/8	**31.8** 1 1/4	**17.5** 11/16	**22.2** 7/8	**7.9** 5/16	**9.5** 3/8	**28.6** 1 1/8	GRA010RRB	S1010K	**0.245** 0.54
GVFTD	GVFTDR	**17**												GRAE17RRB	SE17K	
GVFTD	GVFTDR	3/4	**90.5** 3 9/16	**71.4** 2 13/16	**60.3** 2 3/8	**8.7** 11/32	**54.8** 2 5/32	**34.1** 1 11/32	**19.8** 25/32	**23.4** 59/64	**9.1** 23/64	**10.7** 27/64	**33.3** 1 5/16	GRA012RRB	S1012K	**0.331** 0.73
GVFTD	GVFTDR	**20**												GRAE20RRB	SE20K	
GVFTD	GVFTDR	7/8												GRA014RRB	S1014K	
GVFTD	GVFTDR	15/16	**95.2** 3 3/4	**76.2** 3	**66.7** 2 5/8	**8.7** 11/32	**60.3** 2 3/8	**34.1** 1 11/32	**19.8** 25/32	**23.4** 59/64	**9.1** 23/64	**10.7** 27/64	**38.1** 1 1/2	GRA015RRB	S1015K	**0.363** 0.80
GVFTD	GVFTDR	1												GRA100RRB	S1100K	
GVFTD	GVFTDR	**25**												GRAE25RRB	SE25K	
GVFTD	GVFTDR	1 1/8												GRA102RRB	S1102K	
GVFTD	GVFTDR	1 3/16	**112.7** 4 7/16	**90.5** 3 9/16	**78.6** 3 3/32	**10.3** 13/32	**71.4** 2 13/16	**38.9** 1 17/32	**22.2** 7/8	**26.6** 1 3/64	**10.7** 27/64	**11.9** 15/32	**44.5** 1 3/4	GRA103RRB	S1103K	**0.608** 1.34
GVFTD	GVFTDR	1 1/4 S												GRA103RRB2	S1103K3	
GVFTD	GVFTDR	**30**												GRAE30RRB	SE30K	
GVFTD	GVFTDR	1 1/4												GRA104RRB	S1104K	
GVFTD	GVFTDR	1 3/8	**122.2** 4 13/16	**100.0** 3 15/16	**88.9** 3 1/2	**10.3** 13/32	**81.8** 3 7/32	**42.1** 1 21/32	**23.8** 15/16	**29.4** 1 5/32	**11.1** 7/16	**12.7** 1/2	**54.0** 2 1/8	GRA106RRB	S1106K	**0.862** 1.90
GVFTD	GVFTDR	1 7/16												GRA107RRB	S1107K	
GVFTD	GVFTDR	**35**												GRAE35RRB	SE35K	

[1]All units have a 1/4-28 grease fitting.
NOTE: Shaft diameter with an S = smaller housing.

GRFTD, GRFTDR RELUBRICATABLE SERIES – RFTD, RFTDR NON-RELUBRICATABLE SERIES

- The malleable-iron flange cartridges provide self-alignment and rigid support for medium-duty applications.

Suggested shaft tolerances: nominal to -0.013 mm, -0.0005 in.

To order, specify UNIT and SHAFT DIAMETER.

For the non-relubricatable series, omit G prefix on unit and bearing number.

Example: RFTD 1 3/16 in. or RFTDR 1 3/16 in.; GRFTD 1 3/16 in. or GRFTDR 1 3/16 in.

BEARING DATA

Unit	Bearing No.	Dimensions and Load Ratings
RFTD, RFTDR	-KRRB	Page A-32
GRFTD, GRFTDR	G-KRRB	Page A-34

Relubricatable series

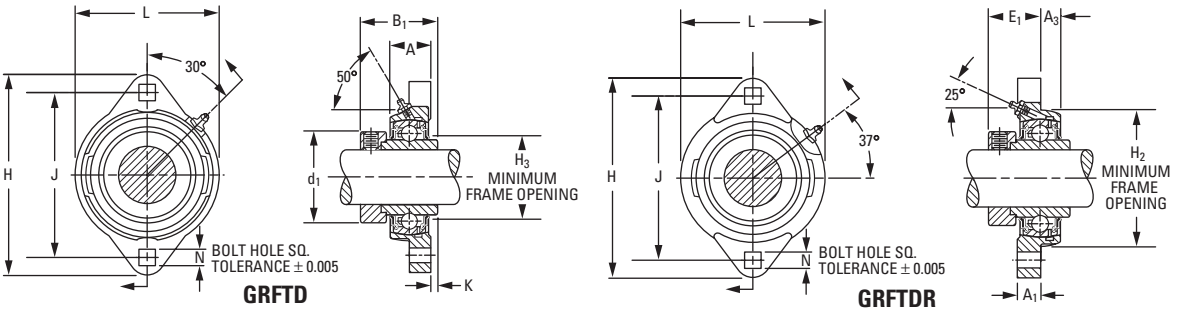

Non-relubricatable series

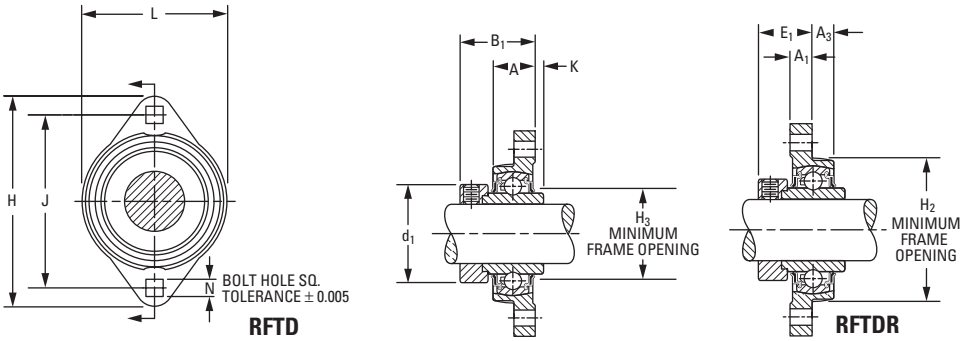

Unit		Shaft Dia.	H	J	L	N	H_2	B_1	A	E_1	A_3	A_1	d_1	H_3	K	Bearing No.	Collar No.	Unit Wt.
Face Mounted	Reverse Mounted	in. **mm**	**mm** in.	**mm** in.	**mm** in.	**mm** in.	**mm** in.	**mm** in.	**mm** in.	**mm** in.	**mm** in.	**mm** in.	**mm** in.	**mm** in.	**mm** in.			**kg** lbs.
RELUBRICATABLE SERIES[1]																		
GRFTD	GRFTDR	1/2														G1008KRRB	S1008K	
GRFTD	GRFTDR	5/8	**81.0**	**63.5**	**53.2**	**7.1**	**47.6**	**37.3**	**15.9**	**23.4**	**7.9**	**9.5**	**28.6**	**29.4**	**4.4**	G1010KRRB	S1010K	**0.254**
GRFTD	GRFTDR	11/16	3 3/16	2 1/2	2 3/32	9/32	1 7/8	1 15/32	5/8	59/64	5/16	3/8	1 1/8	1 5/32	11/64	G1011KRRB	S1011K	0.56
GRFTD	GRFTDR	**17**														GE17KRRB	SE17K	
GRFTD	GRFTDR	3/4	**90.5**	**71.4**	**60.3**	**8.7**	**54.8**	**43.7**	**19.8**	**26.6**	**9.1**	**10.7**	**33.3**	**34.1**	**6.4**	G1012KRRB	S1012K	**0.386**
GRFTD	GRFTDR	**20**	3 9/16	2 13/16	2 3/8	11/32	2 5/32	1 23/32	25/32	1 3/64	23/64	27/64	1 5/16	1 11/32	1/4	GE20KRRB	SE20K	0.85
GRFTD	GRFTDR	7/8														G1014KRRB	S1014K	
GRFTD	GRFTDR	15/16	**95.2**	**76.2**	**66.7**	**8.7**	**60.3**	**44.4**	**19.8**	**27.0**	**9.1**	**10.7**	**38.1**	**38.9**	**6.7**	G1015KRRB	S1015K	**0.386**
GRFTD	GRFTDR	1	3 3/4	3	2 5/8	11/32	2 3/8	1 3/4	25/32	1 1/16	23/64	27/64	1 1/2	1 17/32	17/64	G1100KRRB	S1100K	0.85
GRFTD	GRFTDR	**25**														GE25KRRB	SE25K	
GRFTD	GRFTDR	1 1/16														G1101KRRB	S1101K	
GRFTD	GRFTDR	1 1/8														G1102KRRB	S1102K	
GRFTD	GRFTDR	1 3/16	**112.7**	**90.5**	**78.6**	**10.3**	**71.4**	**48.4**	**22.2**	**30.2**	**10.7**	**11.9**	**44.5**	**46.0**	**6.4**	G1103KRRB	S1103K	**0.712**
GRFTD	GRFTDR	1 1/4 S	4 7/16	3 9/16	3 3/32	13/32	2 13/16	1 29/32	7/8	1 3/16	27/64	15/32	1 3/4	1 13/16	1/4	G1103KRRB3	S1103K3	1.57
GRFTD	GRFTDR	**30**														GE30KRRB	SE30K	
GRFTD	GRFTDR	1 1/4														G1104KRRB	S1104K	
GRFTD	GRFTDR	1 5/16														G1105KRRB	S1105K	
GRFTD	GRFTDR	1 3/8	**122.2**	**100.0**	**88.9**	**10.3**	**81.8**	**51.2**	**23.8**	**32.5**	**11.1**	**12.7**	**54.0**	**53.2**	**6.4**	G1106KRRB	S1106K	**0.962**
GRFTD	GRFTDR	1 7/16	4 13/16	3 15/16	3 1/2	13/32	3 7/32	2 1/64	15/16	1 9/32	7/16	1/2	2 1/8	2 3/32	1/4	G1107KRRB	S1107K	2.12
GRFTD	GRFTDR	**35**														GE35KRRB	SE35K	

[1]All units have a 1/4-28 grease fitting.

NOTE: Shaft diameter with an S = smaller housing.

PRESSED-STEEL HOUSED UNITS

PBS SERIES

- The PBS series has an economical transmission unit for light-duty, moderate-speed requirements.
- The housing includes two heavy-gage, zinc-plated steel stampings. One is a standard stamping used in the MST two-bolt flangette unit.
- The RA-RRB (extended inner-ring) bearings are regularly furnished with this bearing. RR wide inner rings also can be used.
- The Timken self-locking collar completes the assembly.
- This series is made with a precision bearing seat and dimensions are held to close tolerances. This provides an accurate bearing-to-housing fit and ensures proper alignment of parts.
- The RA-RRB bearing used in the PBS pillow block has positive-contact land-riding seals. It includes a shroud cap design and is permanently prelubricated.
- The base-to-center height and bolt spacing are interchangeable with many other pillow blocks on the market.

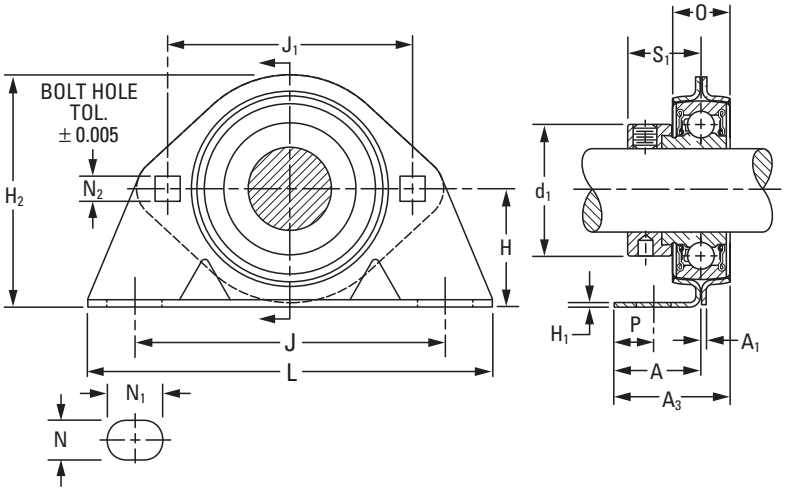

Suggested shaft tolerances: nominal to -0.013 mm, -0.0005 in.

To order, specify UNIT and SHAFT DIAMETER.
Example: PBS 1 7/16 in.

BEARING DATA

Unit	Bearing No.	Dimensions and Load Ratings
PBS	RA-RRB	Page A-48

Unit	Shaft Dia.	H	J	N_1	L	H_2	J_1	d_1	S_1	O	A	H_1	A_1	A_3	N_2	P	N	Bearing No.	Flangette No.	Stamping Radial Load Rating[1]	Unit Wt.
	in. **mm**	**mm** in.	**mm** in.	**mm** in.	**mm** in.	**mm** in.	**mm** in.	**mm** in.	**mm** in.	**mm** in.	**mm** in.	**mm** in.	**mm** in.	**mm** in.	**mm** in.	**mm** in.	**mm** in.			**N** lbs.	**kg** lbs.
PBS	1/2																	RA008RRB			
PBS	5/8	**30.2**	**92.1**	**15.9**	**123.8**	**59.5**	**63.5**	**28.6**	**22.2**	**14.3**	**25.4**	**2.64**	**1.90**	**32.5**	**7.1**	**10.3**	**10.3**	RA010RRB	40	**2650**	**0.340**
PBS	**17**	1 3/16	3 5/8	5/8	4 7/8	2 11/32	2 1/2	1 1/8	7/8	9/16	1	0.104	0.075	1 9/32	9/32	13/32	13/32	RAE17RRB	MST-(ZP)	600	0.75
PBS	3/4	**33.3**	**96.8**	**15.9**	**127.0**	**68.3**	**71.4**	**33.3**	**23.4**	**15.9**	**25.4**	**3.02**	**2.11**	**33.3**	**8.7**	**10.3**	**10.3**	RA012RRB	47	**3100**	**0.440**
PBS	**20**	1 5/16	3 13/16	5/8	5	2 11/16	2 13/16	1 5/16	59/64	5/8	1	0.119	0.083	1 5/16	11/32	13/32	13/32	RAE20RRB	MST-(ZP)	700	0.97
PBS	7/8																	RA014RRB			
PBS	15/16	**36.5**	**95.2**	**20.6**	**133.4**	**72.2**	**76.2**	**38.1**	**23.4**	**17.5**	**25.4**	**3.40**	**2.11**	**34.1**	**8.7**	**11.1**	**11.1**	RA015RRB	52	**3550**	**0.544**
PBS	1	1 7/16	3 3/4	13/16	5 1/4	2 27/32	3	1 1/2	59/64	11/16	1	0.134	0.083	1 11/32	11/32	7/16	7/16	RA100RRB	MST-(ZP)	800	1.20
PBS	**25**																	RAE25RRB			
PBS	1 1/8																	RA102RRB			
PBS	1 3/16	**42.9**	**119.1**	**22.2**	**158.8**	**84.9**	**90.5**	**44.4**	**26.6**	**17.5**	**30.2**	**3.40**	**2.64**	**37.3**	**10.3**	**14.3**	**14.3**	RA103RRB	62	**3550**	**0.744**
PBS	1 1/4 S	1 11/16	4 11/16	7/8	6 1/4	3 11/32	3 9/16	1 3/4	1 3/64	11/16	1 3/16	0.134	0.104	1 15/32	13/32	9/16	9/16	RA103RRB2	MST-(ZP)	800	1.64
PBS	**30**																	RAE30RRB			
PBS	1 1/4																	RA104RRB			
PBS	1 3/8	**47.6**	**127.0**	**22.2**	**165.1**	**94.5**	**100.0**	**54.0**	**29.4**	**22.2**	**34.9**	**3.78**	**2.64**	**46.0**	**10.3**	**14.3**	**14.3**	RA106RRB	72	**4000**	**1.089**
PBS	1 7/16	1 7/8	5	7/8	6 1/2	3 23/32	3 15/16	2 1/8	1 5/32	7/8	1 3/8	0.149	0.104	1 13/16	13/32	9/16	9/16	RA107RRB	MST-(ZP)	900	2.40
PBS	**35**																	RAE35RRB			

[1]Stamping thrust rating is 1/5 of stamping radial load rating.
NOTE: Shaft diameter with an S = smaller housing.

PB SERIES – RPB SERIES

- The PB series provides the advantages of ball bearings at an economical price.
- They are used for light-duty applications.
- The PB series consists of a two-piece separable zinc-plated steel housing with a spherical bearing seat. This allows the spherically ground bearing to have initial self-alignment in all directions.
- The ball bearing is an RA-RRB extended inner-ring-type with positive-contact, land-riding seals and a self-locking collar.
- The series incorporates an improved shroud-cap design and comes permanently prelubricated.
- RPB has the same construction as the PB-type, but with a thick, electrically conductive rubber inner liner.
- The bearings in the RPB unit are designated as RA-RRB FS450 and have a special ball and race finish for quiet operation.
- The RABR unit consists of the bearing with the rubber interliner.

Suggested shaft tolerances: nominal to -0.013 mm, -0.0005 in.

To order, specify UNIT and SHAFT DIAMETER.

Example: PB 1 3/16 in. or RPB 1 3/16 in.

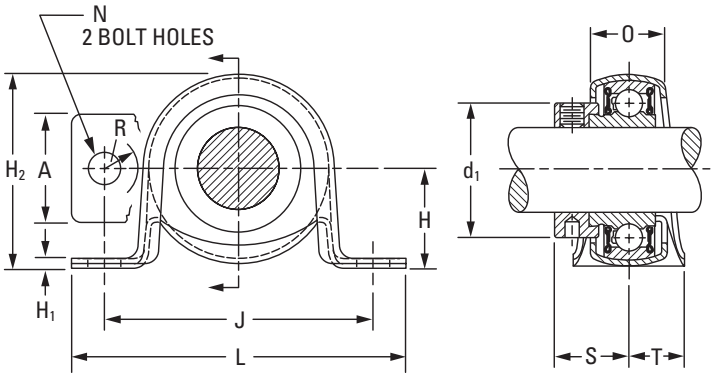

PB Series

BEARING DATA

Unit	Bearing No.	Dimensions and Load Ratings
PB	RA-RRB	Page A-48
RPB	RA-RRB	Page A-48

Unit	Shaft Dia.	H	H_2	J max.	J min.	L	A	H_1	N	R	d_1	O	S_1	T	Bearing No.	Collar No.	Stamping Radial Load Rating[1]	Unit Wt.
	in. **mm**	**mm** in.	**mm** in.	**mm** in.	**mm** in.	**mm** in.	**mm** in.	**mm** in.	**mm** in.	**mm** in.	**mm** in.	**mm** in.	**mm** in.	**mm** in.			**N** lbs.	**kg** lbs.
PB	1/2	**22.2**	**44.4**	**81.0**	**55.6**	**92.1**	**25.4**	**2.54**	**8.7**	**8.7**	**28.6**	**18.24**	**22.07**	**12.7**	RA008RRB	S1008K		
PB	5/8	7/8	1 3/4	3 3/16	2 3/16	3 5/8	1	0.100	11/32	11/32	1 1/8	0.718	0.869	1/2	RA010RRB	S1010K	**1340** 300	**0.200** 0.44
PB	**17**														RAE17RRB	SE17K		
PB	3/4	**25.4**	**52.4**	**88.9**	**63.5**	**104.8**	**25.4**	**2.54**	**10.3**	**10.3**	**33.3**	**21.82**	**23.44**	**15.9**	RA012RRB	S1012K	**1560** 350	**0.259** 0.57
PB	**20**	1	2 1/16	3 1/2	2 1/2	4 1/8	1	0.100	13/32	13/32	1 5/16	0.859	0.923	5/8	RAE20RRB	SE20K		
PB	7/8														RA014RRB	S1014K		
PB	15/16	**28.6**	**56.4**	**100.0**	**71.4**	**114.0**	**28.6**	**5.28**	**10.3**	**10.3**	**38.1**	**25.40**	**23.44**	**14.3**	RA015RRB	S1015K	**1760** 400	**0.295** 0.65
PB	1	1 1/8	2 7/32	3 15/16	2 13/16	4 1/2	1 1/8	0.208	13/32	13/32	1 1/2	1.000	0.923	9/16	RA100RRB	S1100K		
PB	**25**														RAE25RRB	SE25K		
PB	1 1/8														RA102RRB	S1102K		
PB	1 3/16	**33.3**	**66.7**	**104.8**	**76.2**	**123.8**	**31.8**	**3.68**	**10.3**	**10.3**	**44.5**	**25.40**	**26.72**	**19.0**	RA103RRB	S1103K	**2650** 600	**0.476** 1.05
PB	1 1/4 S	1 5/16	2 5/8	4 1/8	3	4 7/8	1 1/4	0.145	13/32	13/32	1 3/4	1.000	1.052	3/4	RA103RRB2	S1103K3		
PB	**30**														RAE30RRB	SE30K		

[1]Housing thrust rating is 1/3 of housing radial load rating. Maximum suggested speed is 2400 RPM.
NOTE: Shaft diameter with an S = smaller housing.
NOTE: Load ratings are upright mounted capacities with load direction toward base.
NOTE: These units should not be mounted vertically or upside down.

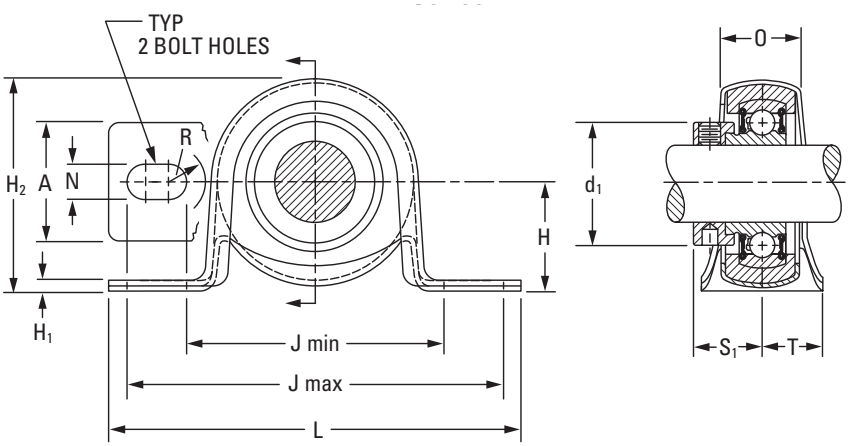

RPB Series

Unit	Shaft Dia.	H	H_2	J max.	J min.	L	A	H_1	N	R	d_1	O	S_1	T	Bearing No.[1]	Collar No.	Stamping Radial Load Rating[2]	Unit Wt.
	in. **mm**	**mm** in.	**mm** in.	**mm** in.	**mm** in.	**mm** in.	**mm** in.	**mm** in.	**mm** in.	**mm** in.	**mm** in.	**mm** in.	**mm** in.	**mm** in.			**N** lbs.	**kg** lbs.
RPB	½														RA008RRB	S1008K		
RPB	⅝	**25.40** 1	**52.4** 2 1/16	**88.9** 3 ½	**63.5** 2 ½	**104.8** 4 ⅛	**25.4** 1	**2.54** 0.100	**10.3** 13/32	**10.3** 13/32	**28.6** 1 ⅛	**21.59** 0.85	**22.07** 0.869	**15.9** ⅝	RA010RRB	S1010K	**880** 200	**0.200** 0.44
RPB	**17**														RAE17RRB	SE17K		
RPB	¾	**28.58** 1 ⅛	**56.4** 2 7/32	**100.0** 3 5/16	**71.4** 2 13/16	**114.0** 4 ½	**28.6** 1 ⅛	**5.28** 0.208	**10.3** 13/32	**10.3** 13/32	**33.3** 1 5/16	**25.40** 1.00	**23.44** 0.923	**14.3** 9/16	RA012RRB	S1012K	**1120** 250	**0.259** 0.57
RPB	**20**														RAE20RRB	SE20K		
RPB	⅞														RA014RRB	S1014K		
RPB	15/16	**33.34** 1 5/16	**66.7** 2 ⅝	**104.8** 4 ⅛	**76.2** 3	**123.8** 4 ⅞	**31.8** 1 ¼	**3.68** 0.145	**10.3** 13/32	**10.3** 13/32	**38.1** 1 ½	**25.40** 1.00	**23.44** 0.923	**19.0** ¾	RA015RRB	S1015K	**1340** 300	**0.295** 0.65
RPB	1														RA100RRB	S1100K		
RPB	**25**														RAE25RRB	SE25K		
LRPB	1 3/16	**33.34** 1 5/16	**66.7** 2 ⅝	**104.8** 4 ⅛	**76.2** 3	**123.8** 4 ⅞	**31.8** 1 ¼	**3.68** 0.145	**10.3** 13/32	**10.3** 13/32	**44.4** 1 ¾	**25.40** 1.00	**28.30** 1.114	**19.0** ¾	RAL103NPPB	LS103K	**1340** 300	**0.476** 1.05

[1]Bearing suffix number FS450.
[2]Housing thrust rating is ⅓ of housing radial load rating. Maximum suggested speed is 2400 RPM.

PRESSED-STEEL FLANGED UNITS

VFMST SERIES

- The zinc-plated, pressed-metal flange unit is assembled with an RA-RR prelubricated extended inner-ring-type bearing.
- The unit is ideal for light-duty applications.
- The unit features flush-mounting.
- The unit has additional contamination protection.
- The VFMST series is self-aligning.

Suggested shaft tolerances:

nominal to -0.013 mm, -0.0005 in.

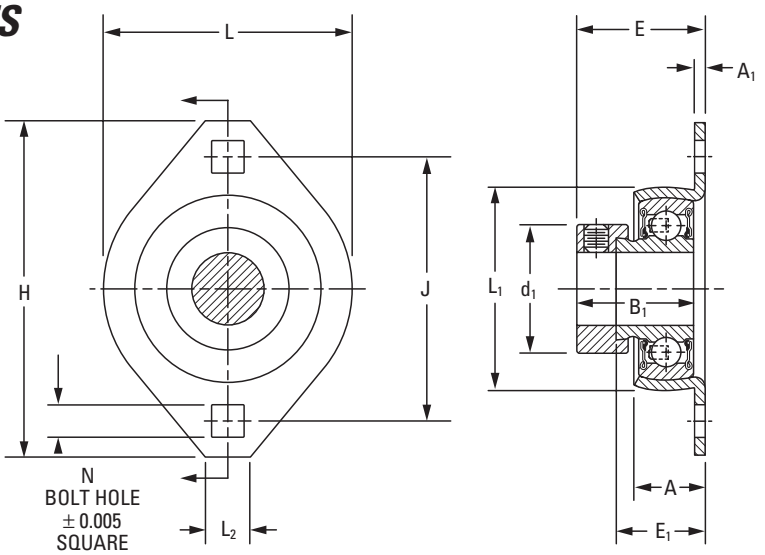

BEARING DATA

Unit	Bearing No.	Dimensions and Load Ratings
VFMST	RA-RRB	Page A-48

Unit	Shaft Dia.	H	J	L	E	A	N	L_1	E_1	L_2	B_1	d_1	A_1	Bearing No.	Collar No.	Stamping Size	Stamping Radial Load Rating[1]
	in. **mm**	**mm** in.	**mm** in.	**mm** in.	**mm** in.	**mm** in.	**mm** in.	**mm** in.	**mm** in.	**mm** in.	**mm** in.	**mm** in.	**mm** in.				**N** lbs.
VFMST	3/4	**90.5**	**71.4**	**66.7**	**33.3**	**16.7**	**8.7**	**50.8**	**23.0**	**12.7**	**31.0**	**33.3**	**2.64**	RA012RRB	S1012K	47FMST	**2240**
VFMST	**20**	3 9/16	2 13/16	2 5/8	1 5/16	21/32	11/32	2	29/32	1/2	1 7/32	1 5/16	0.104	RAE20RRB	SE20K		500
VFMST	7/8													RA014RRB	S1014K		
VFMST	15/16	**95.2**	**76.2**	**71.0**	**33.3**	**18.3**	**8.7**	**55.6**	**23.8**	**12.7**	**31.0**	**38.1**	**2.64**	RA015RRB	S1015K	52FMST	**2650**
VFMST	1	3 3/4	3	2 51/64	1 5/16	23/32	11/32	2 3/16	15/16	1/2	1 7/32	1 1/2	0.104	RA100RRB	S1100K		600
VFMST	**25**													RAE25RRB	SE25K		
VFMST	1 1/8													RA102RRB	S1102K		
VFMST	1 3/16	**112.7**	**90.5**	**84.1**	**38.9**	**23.0**	**10.3**	**66.7**	**27.8**	**15.9**	**35.7**	**44.4**	**3.40**	RA103RRB	S1103K	62FMST	**3550**
VFMST	1 1/4 S	4 7/16	3 9/16	3 5/16	1 17/32	29/32	13/32	2 5/8	1 3/32	5/8	1 13/32	1 3/4	0.134	RA103RRB2	S1103K3		800
VFMST	**30**													RAE30RRB	SE30K		

[1]Housing thrust rating is 1/3 of housing radial load rating.
NOTE: Shaft diameter with an S = smaller housing.

LFST SERIES

- This unit is zinc-plated, pressed-steel and flush-mounted.
- This unit simplifies bearing flange-unit installations.
- The conductive rubber interliner reduces noise and vibration. This allows for alignment while the pressed-steel flange assures rigid bearing support.
- The bolt-hole spacing permits interchangeability with competitive mountings.
- The unit offers compact, economical, corrosion-resistant housing and balanced design.
- The unit features Timken RAL light-series ball bearings. The RAL provides precision in an extended inner-ring bearing with superior shroud seal protection and self-locking collar.
- The bearings are prelubricated.

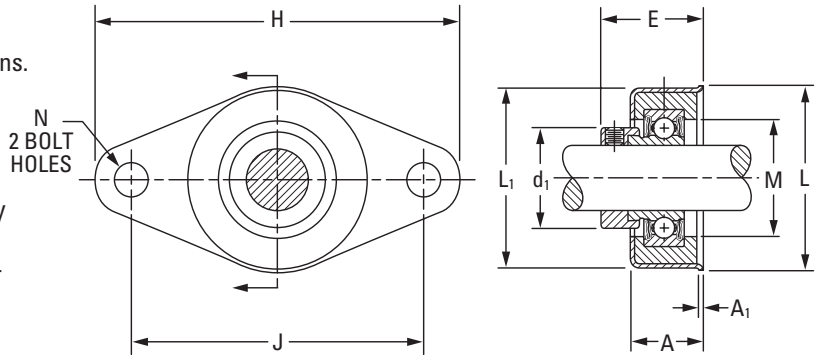

Suggested shaft tolerances:

nominal to -0.013 mm, -0.0005 in.

To order, specify UNIT and SHAFT DIAMETER.

Example: LFST 1 in.

BEARING DATA

Unit	Bearing No.	Dimensions and Load Ratings
LFST	RAL-NPP	Page A-55

Unit	Shaft Dia.	H	J	L	L_1	E	N	A	A_1	d_1	M	Bearing No.	Collar No.	Housing Radial Load Rating[1]
	in.	**mm** in.	**mm** in.	**mm** in.	**mm** in.	**mm** in.	**mm** in.	**mm** in.	**mm** in.	**mm** in.	**mm** in.			**N** lbs.
LFST	1/2	**114.3** 4 1/2	**92.1** 3 5/8	**57.2** 2 1/4	**55.6** 2 3/16	**31** 1 7/32	**9.5** 3/8	**23** 29/32	**1.52** 0.06	**25.4** 1	**29.4** 1 5/32	RAL008NPP	LS008K	**880** 200
LFST	5/8											RAL010NPP	LS010K	
LFST	3/4	**114.3** 4 1/2	**92.1** 3 5/8	**57.2** 2 1/4	**55.6** 2 3/16	**31** 1 7/32	**9.5** 3/8	**23** 29/32	**1.52** 0.06	**29.8** 1 11/64	**34.9** 1 3/8	RAL012NPP	LS012K	**1120** 250
LFST	15/16	**114.3** 4 1/2	**92.1** 3 5/8	**57.2** 2 1/4	**55.6** 2 3/16	**31** 1 7/32	**9.5** 3/8	**23** 29/32	**1.52** 0.06	**36.1** 1 27/64	**39.7** 1 9/16	RAL015NPP	LS015K	**1340** 300
LFST	1											RAL100NPP	LS100K	

[1]Housing thrust rating is 1/3 of housing radial load rating. Maximum suggested speed is 2400 RPM.

PRESSED-STEEL FLANGETTE UNITS

RR FLANGETTE UNIT

- The unit consists of two interchangeable, pressed-steel, zinc-plated flanges housing a standard bearing with a self-locking collar.
- The spherical inside surfaces of each pair of flanges mate with the spherical outside surface of the bearing's outer ring. This provides initial self-alignment.
- The flangette is equipped with the KRRB (R-seal) wide-inner-ring ball bearing.
- All units are non-relubricatable.

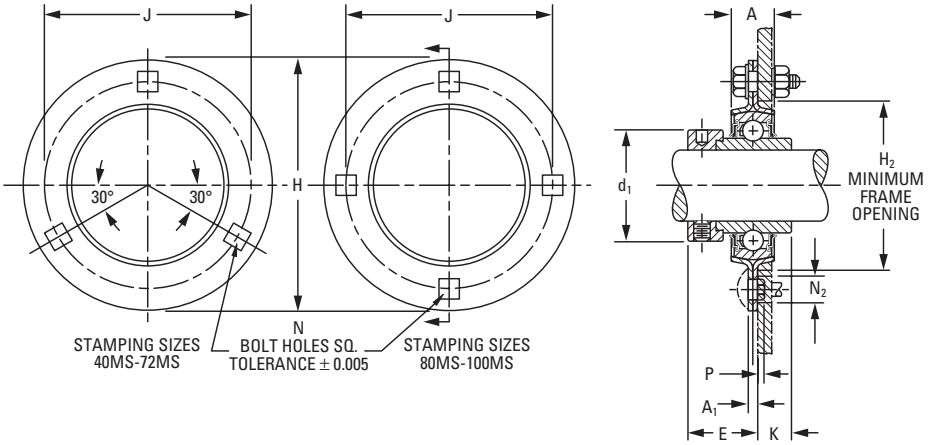

Suggested shaft tolerances:

½ in. – 1 15/16 in., nominal to -0.013 mm, -0.0005 in.;

2 in. – 2 15/16 in., nominal to -0.025 mm, -0.0010 in.

BEARING DATA

Unit	Bearing No.	Dimensions and Load Ratings
RR	KRRB	Page A-32

Unit	Shaft Dia.	H	A	J	N	H_2	A_1	E	K	d_1	Bolt Size	Short Shank P	Long Shank P	Flange Hole Diam. to Clear Sq. Shank N_2	Bearing No.	Collar No.	Stamping[1] Size	Stamping[1] Radial Load Rating[2]	Unit Wt.
	in. **mm**	**mm** in.	**mm** in.	**mm** in.	**mm** in.	**mm** in.	**mm** in.	**mm** in.	**mm** in.	**mm** in.	**mm** in.	**mm** in.	**mm** in.	**mm** in.				**N** lbs.	**kg** lbs.
RR	½	**81.0**	**14.2**	**63.5**	**7.1**	**49.2**	**3.80**	**25.4**	**11.9**	**28.6**	**6.4**	**0.15**	**2.54**	**10.3**	1008KRRB	S1008K	40MS	**2650**	**0.295**
RR	⅝	3 3/16	9/16	2 ½	9/32	1 15/16	0.150	1	15/32	1 ⅛	¼	0.006	0.100	13/32	1010KRRB	S1010K		600	0.65
RR	**17**														E17KRRB	SE17K			
RR	¾	**90.5**	**15.8**	**71.4**	**8.7**	**55.6**	**4.22**	**28.6**	**15.1**	**33.3**	**7.9**	**0.53**	**2.92**	**12.7**	1012KRRB	S1012K	47MS	**3100**	**0.404**
RR	**20**	3 9/16	⅝	2 13/16	11/32	2 3/16	0.166	1 ⅛	19/32	1 5/16	5/16	0.021	0.115	½	E20KRRB	SE20K		700	0.89
RR	⅞														1014KRRB	S1014K	52MS		
RR	15/16	**95.2**	**17.4**	**76.2**	**8.7**	**60.3**	**4.22**	**28.6**	**15.1**	**38.1**	**7.9**	**0.53**	**2.92**	**12.7**	1015KRRB	S1015K		**3550**	**0.490**
RR	1	3 ¾	11/16	3	11/32	2 ⅜	0.166	1 ⅛	19/32	1 ½	5/16	0.021	0.115	½	1100KRRB	S1100K		800	1.08
RR	**25**														E25KRRB	SE25K			
RR	1 ⅛														1102KRRB	S1102K	62MS		
RR	1 3/16	**112.7**	**17.4**	**90.5**	**10.3**	**71.4**	**5.28**	**32.5**	**15.9**	**44.5**	**9.5**	**0.28**	**2.64**	**15.1**	1103KRRB	S1103K		**4900**	**0.753**
RR	1 ¼ S	4 7/16	11/16	3 9/16	13/32	2 13/16	0.208	1 9/32	⅝	1 ¾	⅜	0.011	0.104	19/32	1103KRRB3	S1103K3		1100	1.66
RR	**30**														E30KRRB	SE30K			
RR	1 ¼														1104KRRB	S1104K	72MS		
RR	1 5/16														1105KRRB	S1105K			
RR	1 ⅜	**122.2**	**19.0**	**100.0**	**10.3**	**81.0**	**5.28**	**34.9**	**15.9**	**54.0**	**9.5**	**0.28**	**2.64**	**15.1**	1106KRRB	S1106K		**6220**	**0.962**
RR	1 7/16	4 13/16	¾	3 15/16	13/32	3 3/16	0.208	1 ⅜	⅝	2 ⅛	⅜	0.011	0.104	19/32	1107KRRB	S1107K		1400	2.12
RR	**35**														E35KRRB	SE35K			

[1]Stampings must be ordered in pairs to assemble bearing.
[2]Thrust ratings for stamping are 50 percent of radial ratings.
NOTE: Shaft diameter with an S = smaller housing.

Continued on next page.

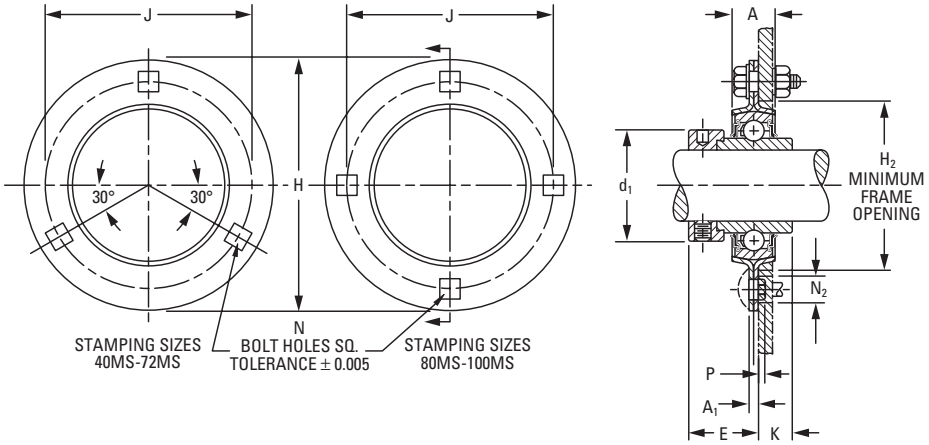

Continued from previous page.

Unit	Shaft Dia.	H	A	J	N	H_2	A_1	E	K	d_1	Bolt Size	Short Shank P	Long Shank P	Flange Hole Diam. to Clear Sq. Shank N_2	Bearing No.	Collar No.	Stamping[1] Size	Stamping[1] Radial Load Rating[2]	Unit Wt.
	in. **mm**	**mm** in.	**mm** in.	**mm** in.	**mm** in.	**mm** in.	**mm** in.	**mm** in.	**mm** in.	**mm** in.	**mm** in.	**mm** in.	**mm** in.	**mm** in.				**N** lbs.	**kg** lbs.
RR	1 1/2	**147.6**	**20.6**	**119.1**	**13.5**	**90.5**	**6.80**	**38.1**	**18.3**	**60.3**	**12.7**	**0.33**	**2.72**	**19.4**	1108KRRB	S1108KT	80MS	**7500**	**1.143**
RR	1 9/16	5 13/16	13/16	4 11/16	17/32	3 9/16	0.268	1 1/2	23/32	2 3/8	1/2	0.013	0.107	49/64	1109KRRB	S1109KT		1700	2.52
RR	**40**														E40KRRB	SE40K			
RR	1 5/8	**149.2**	**22.2**	**120.6**	**13.5**	**96.8** 3	**6.80**	**38.1**	**18.3**	**63.5**	**12.7**	**0.33**	**2.72**	**19.4**	1110KRRB	S1110K	85MS	**7500**	**1.651**
RR	1 11/16	5 7/8	7/8	4 3/4	17/32	13/16	0.268	1 1/2	23/32	2 1/2	1/2	0.013	0.107	49/64	1111KRRB	S1111K		1700	3.64
RR	**45**														E45KRRB	SE45K			
RR	1 7/8	**155.6**	**22.2**	**127.0**	**13.5**	**101.6**	**7.56**	**42.1**	**20.6**	**69.8**	**12.7**	**0**	**1.96**	**19.4**	1114KRRB	S1114K	90MS	**8500**	**1.878**
RR	1 15/16	6 1/8	7/8	5	17/32	4	0.298	1 21/32	13/16	2 3/4	1/2	0	0.077	49/64	1115KRRB	S1115K		1900	4.14
RR	**50**														E50KRRB	SE50K			
RR	2	**166.7**	**23.8**	**138.1**	**13.5**	**112.7**	**7.56**	**47.6**	**23.8**	**76.2**	**12.7**	**0**	**1.96**	**19.4**	1200KRRB	S1200K	100MS	**10200**	**2.268**
RR	2 1/8	6 9/16	15/16	5 7/16	17/32	4 7/16	0.298	1 7/8	15/16	3	1/2	0	0.077	49/64	1202KRRB	S1202K		2300	5.00
RR	2 3/16														1203KRRB	S1203K			
RR	**55**														E55KRRB	SE55K			

[1]Thrust ratings for stamping are 50 percent of radial ratings.
[2]Stampings must be ordered in pairs to assemble bearing.
NOTE: Shaft diameter with an S = smaller housing.

RA FLANGETTE UNIT

- The RA flangette unit is similar to Timken RR flangette unit.
- The unit consists of two interchangeable, pressed-steel, zinc-plated flanges that house a standard ball bearing.
- The unit incorporates an extended inner-ring bearing with a self-locking collar and spherical seat in the cartridge, providing initial self-alignment.
- The unit is equipped with an RA-RRB extended inner ring ball bearing.
- The units are non-relubricatable.

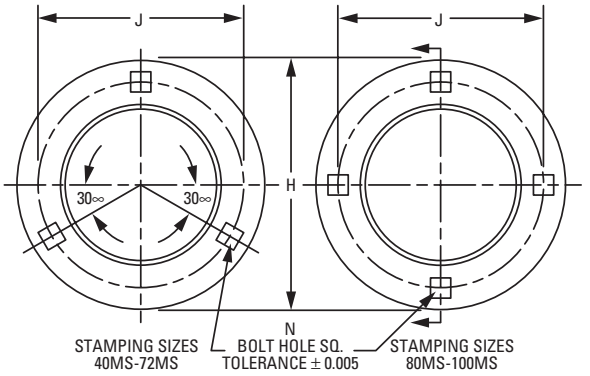

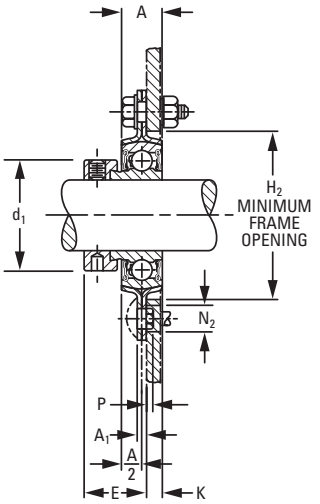

Suggested shaft tolerances:

½ in. – 1 15/16 in., nominal to -0.013 mm, -0.0005 in.;

2 in. – 2 3/16 in., nominal to -0.025 mm, -0.0010 in.

To order, specify UNIT and SHAFT DIAMETER.

Example: RA 1 in. flangette.

BEARING DATA

Unit	Bearing No.	Dimensions and Load Ratings
RA	RA-RRB	Page A-48

Unit	Shaft Dia.	H	A	J	N	H_2	A_1	E	K	d_1	Bolt Size	Short Shank P	Long Shank P	Flange Hole Diam. to Clear Sq. Shank N_2	Bearing No.	Collar No.	Stamping[1] Size	Stamping[1] Radial Load Rating[2]	Unit Wt.
	in. **mm**	**mm** in.	**mm** in.	**mm** in.	**mm** in.	**mm** in.	**mm** in.	**mm** in.	**mm** in.	**mm** in.	**mm** in.	**mm** in.	**mm** in.	**mm** in.				**N** lbs.	**kg** lbs.
RA	½														RA008RRB	S1008K			
RA	9/16	**81.0**	**14.2**	**63.5**	**7.1**	**49.2**	**3.81**	**23.8**	**5.6**	**28.6**	**6.4**	**0.15**	**2.54**	**10.3**	RA009RRB	S1009K	40MS	**2650**	**0.277**
	5/8	3 3/16	9/16	2 1/2	9/32	1 15/16	0.150	15/16	7/32	1 1/8	1/4	0.006	0.100	13/32	RA010RRB	S1010K		600	0.61
RA	**17**														RAE17RRB	SE17K			
RA	¾	**90.5**	**15.8**	**71.4**	**8.7**	**55.6**	**4.22**	**25.0**	**6.4**	**33.3**	**7.9**	**0.53**	**2.92**	**12.7**	RA012RRB	S1012K	47MS	**3100**	**0.363**
		3 9/16	5/8	2 13/16	11/32	2 3/16	0.166	63/64	1/4	1 5/16	5/16	0.021	0.115	1/2				700	0.80
RA	**20**														RAE20RRB	SE20K			
	13/16														RA013RRB	S1013K			
RA	7/8														RA014RRB	S1014K			
RA	15/16	**95.2**	**17.4**	**76.2**	**8.7**	**60.3**	**4.22**	**25.0**	**7.1**	**38.1**	**7.9**	**0.53**	**2.92**	**12.7**	RA015RRB	S1015K	52MS	**3550**	**0.408**
		3 3/4	11/16	3	11/32	2 3/8	0.166	63/64	9/32	1 1/2	5/16	0.021	0.115	1/2				800	0.90
RA	1														RA100RRB	S1100K			
RA	**25**														RAE25RRB	SE25K			
	1 1/16														RA101RRB	S11013K			
RA	1 1/8														RA102RRB	S1102K			
RA	1 3/16	**112.7**	**17.4**	**90.5**	**10.3**	**71.4**	**5.28**	**29.0**	**6.7**	**44.5**	**9.5**	**0.28**	**2.64**	**15.1**	RA103RRB	S1103K	62MS	**4900**	**0.667**
		4 7/16	11/16	3 9/16	13/32	2 13/16	0.208	1 9/64	17/64	1 3/4	3/8	0.011	0.104	19/32				1100	1.47
RA	1 1/4 S														RA103RRB3	S1103K3			
RA	**30**														RAE30RRB	SE30K			
RA	1 1/4														RA104RRB	S1104K			
RA	1 5/16														RA105RRB	S1105K			
RA	1 3/8	**122.2**	**19.0**	**100.0**	**10.3**	**81.0**	**5.28**	**31.8**	**7.5**	**54**	**9.5**	**0.28**	**2.64**	**15.1**	RA106RRB	S1106K	72MS	**6220**	**0.889**
		4 13/16	3/4	3 15/16	13/32	3 3/16	0.208	1 1/4	19/64	2 1/8	3/8	0.011	0.104	19/32				1400	1.96
RA	1 7/16														RA107RRB	S1107K			
RA	**35**														RAE35RRB	SE35K			

[1]Stampings must be ordered in pairs to assemble bearing.
[2]Thrust ratings for stamping are 50 percent of radial ratings.
NOTE: Shaft diameter with an S = smaller housing.

Continued on next page.

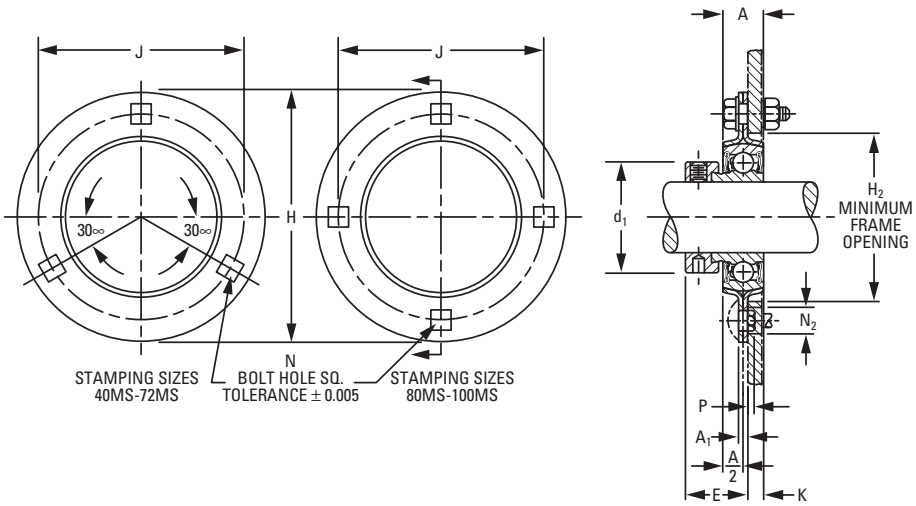

Continued from previous page.

Unit	Shaft Dia.	H	A	J	N	H_2	A_1	E	K	d_1	Bolt Size	Short Shank P	Long Shank P	Flange Hole Diam. to Clear Sq. Shank N_2	Bearing No.	Collar No.	Stamping[1] Size	Stamping[1] Radial Load Rating[2]	Unit Wt.
	in. **mm**	**mm** in.	**mm** in.	**mm** in.	**mm** in.	**mm** in.	**mm** in.	**mm** in.	**mm** in.	**mm** in.	**mm** in.	**mm** in.	**mm** in.	**mm** in.				**N** lbs.	**kg** lbs.
RA	1 1/2	**147.6**	**20.6**	**119.1**	**13.5**	**90.5**	**6.80**	**36.1**	**7.5**	**60.3**	**12.7**	**0.33**	**2.72**	**19.4**	RA108RRB	S1108KT	80MS	**7500**	**1.447**
RA	1 9/16	5 13/16	13/16	4 11/16	17/32	3 9/16	0.268	1 27/64	19/64	2 3/8	1/2	0.013	0.107	49/64	RA109RRB	S1109KT		1700	3.19
RA	**40**														RAE40RRB	SE40K			
RA	1 5/8														RA110RRB	S1110K	85MS		
RA	1 11/16	**149.2**	**22.2**	**120.6**	**13.5**	**96.8**	**6.80**	**36.1**	**7.5**	**63.5**	**12.7**	**0.33**	**2.72**	**19.4**	RA111RRB	S1111K		**7500**	**1.479**
	1 3/4	5 7/8	7/8	4 3/4	17/32	3 13/16	0.268	1 27/64	19/64	2 1/2	1/2	0.013	0.107	49/64	RA112RRB	S1112K		1700	3.26
RA	**45**														RAE45RRB	SE45K			
	1 13/16														RA113RRB	S1113K	90MS		
RA	1 7/8	**155.6**	**22.2**	**127.0**	**13.5**	**101.6**	**7.56**	**36.5**	**7.1**	**69.8**	**12.7**	**0**	**1.96**	**19.4**	RA114RRB	S1114K		**8500**	**1.669**
RA	1 15/16	6 1/8	7/8	5	17/32	4	0.300	1 7/16	9/32	2 3/4	1/2	0	0.077	49/64	RA115RRB	S1115K		1900	3.68
RA	**50**														RAE50RRB	SE50K			
RA	2														RA200RRB	S1200K	100MS		
	2 1/16														RA201RRB	S1201K			
RA	2 1/8	**166.7**	**23.8**	**138.1**	**13.5**	**112.7**	**7.56**	**40.5**	**8.3**	**76.2**	**12.7**	**0**	**1.96**	**19.4**	RA202RRB	S1202K		**10200**	**2.000**
RA	2 3/16	6 9/16	15/16	5 7/16	17/32	4 7/16	0.300	1 19/32	29/64	3	1/2	0	0.077	49/64	RA203RRB	S1203K		2300	4.41
RA	**55**														RAE55RRB	SE55K			

[1]Stampings must be ordered in pairs to assemble bearing.
[2]Thrust ratings for stamping are 50 percent of radial ratings.
NOTE: Shaft diameter with an S = smaller housing.

RAT, RRT TWO-BOLT FLANGETTE UNITS

- These units are designed for installations where the standard three-bolt flangettes cannot be used due to space limitations.
- Like standard three-bolt flangettes, they are available with RA-RRB extended inner ring ball bearings and the KRRB wide-inner-ring ball bearings (RRT) with self-locking collars.
- All units are non-relubricatable.

Suggested shaft tolerances:

½ in. – 1 7/16 in.,

nominal to -0.013 mm, -0.0005 in.;

To order, specify UNIT and SHAFT DIAMETER.

Example: RAT 1 in. flangette or RRT 1 in. flangette.

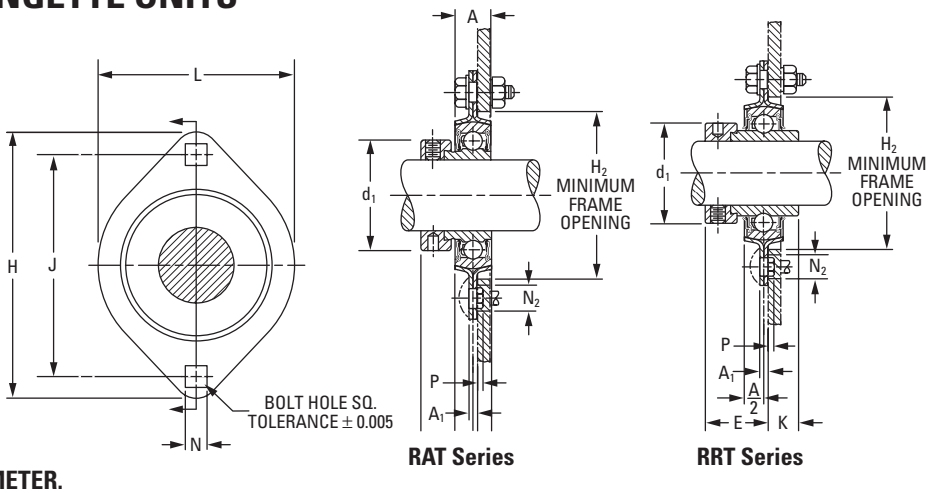

RAT Series

RRT Series

BEARING DATA

Unit	Bearing No.	Dimensions and Load Ratings
RAT	RA-RRB	Page A-48
RRT	-KRRB	Page A-32

Unit	Shaft Dia.	L	H	A	J	N	H_2	A_1	E	K	d_1	Bolt Size	Short Shank P	Long Shank P	Flange Hole Diam. to Clear Sq. Shank N_2	Bearing No.	Collar No.	Stamping[1] Size	Stamping[1] Radial Load Rating[2]	Unit Wt.
	in. **mm**	**mm** in.	**mm** in.	**mm** in.	**mm** in.	**mm** in.	**mm** in.	**mm** in.	**mm** in.	**mm** in.	**mm** in.	**mm** in.	**mm** in.	**mm** in.	**mm** in.				**N** lbs.	**kg** lbs.
RAT	½															RA008RRB	S1008K			
RAT	⅝	**58.7** 2 5/16	**81.0** 3 3/16	**14.2** 9/16	**63.5** 2 1/2	**7.1** 9/32	**49.2** 1 15/16	**3.81** 0.150	**23.8** 15/16	**5.6** 7/32	**28.6** 1 1/8	**6.4** 1/4	**0.15** 0.006	**2.54** 0.100	**10.3** 13/32	RA010RRB	S1010K	40MST	**2650** 600	**0.213** 0.47
RAT	**17**															RAE17RRB	SE17K			
RAT	¾	**66.7** 2 5/8	**90.5** 3 9/16	**15.8** 5/8	**71.4** 2 13/16	**8.7** 11/32	**55.6** 2 3/16	**4.22** 0.166	**25.0** 63/64	**6.4** 1/4	**33.3** 1 5/16	**7.9** 5/16	**0.53** 0.021	**2.92** 0.115	**12.7** 1/2	RA012RRB	S1012K	47MST	**3100** 700	**0.299** 0.66
RAT	**20**															RAE20RRB	SE20K			
RAT	⅞															RA014RRB	S1014K			
RAT	15/16	**71.0** 2 51/64	**95.2** 3 3/4	**17.4** 11/16	**76.2** 3	**8.7** 11/32	**60.3** 2 3/8	**4.22** 0.166	**25.0** 63/64	**7.1** 9/32	**38.1** 1 1/2	**7.9** 5/16	**0.53** 0.021	**2.92** 0.115	**12.7** 1/2	RA015RRB	S1015K	52MST	**3550** 800	**0.331** 0.73
RAT	1															RA100RRB	S1100K			
RAT	**25**															RAE25RRB	SE25K			
RAT	1 1/16															RA101RRB	S1103K			
RAT	1 1/8															RA102RRB	S1102K			
RAT	1 3/16	**84.1** 3 5/16	**112.7** 4 7/16	**17.4** 11/16	**90.5** 3 9/16	**10.3** 13/32	**71.4** 2 13/16	**5.28** 0.208	**29.0** 1 9/64	**6.7** 17/64	**44.5** 1 3/4	**9.5** 3/8	**0.28** 0.011	**2.64** 0.104	**15.1** 19/32	RA103RRB	S1103K	62MST	**4900** 1100	**0.531** 1.17
RAT	1 1/4 S															RA103RRB2	S1103K3			
RAT	**30**															RAE30RRB	SE30K			
RAT	1 1/4															RA104RRB	S1104K			
RAT	1 5/16															RA105RRB	S1105K			
RAT	1 3/8	**93.7** 3 11/16	**125.4** 4 15/16	**22.2** 7/8	**100.0** 3 15/16	**10.3** 13/32	**81.0** 3 3/16	**5.28** 0.208	**32.1** 1 17/64	**6.7** 17/64	**54.0** 2 1/8	**9.5** 3/8	**0.28** 0.011	**2.64** 0.104	**15.1** 19/32	RA106RRB	S1106K	72MST	**6220** 1400	**0.476** 1.05
RAT	1 7/16															RA107RRB	S1107K			
RAT	**35**															RAE35RRB	SE35K			

[1]Stampings must be ordered in pairs to assemble bearing.
[2]Thrust ratings for stamping are 50 percent of radial ratings.
NOTE: Shaft diameter with an S = smaller housing.

Continued on next page.

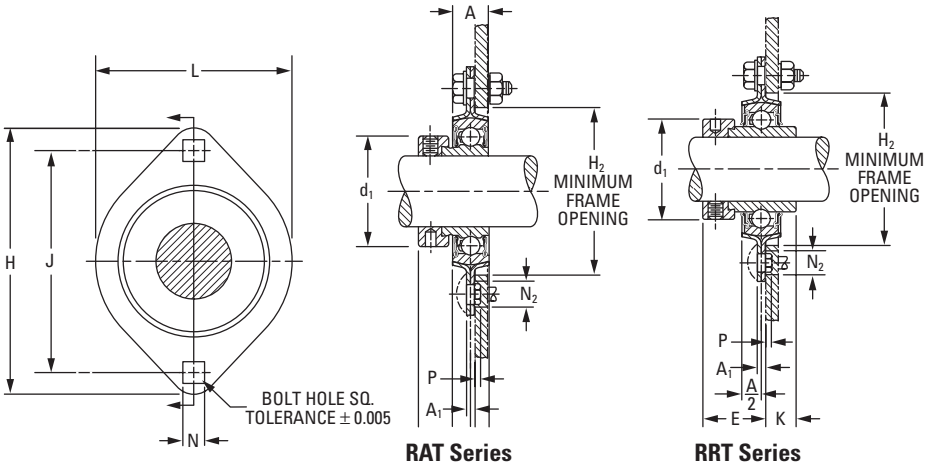

Continued from previous page.

Unit	Shaft Dia.	L	H	A	J	N	H_2	A_1	E	K	d_1	Bolt Size	Short Shank P	Long Shank P	Flange Hole Diam. to Clear Sq. Shank N_2	Bearing No.	Collar No.	Stamping[1] Size	Stamping[1] Radial Load Rating[2]	Unit Wt.
	in. **mm**	**mm** in.	**mm** in.	**mm** in.	**mm** in.	**mm** in.	**mm** in.	**mm** in.	**mm** in.	**mm** in.	**mm** in.	**mm** in.	**mm** in.	**mm** in.	**mm** in.				**N** lbs.	**kg** lbs.
RRT	1/2															1008KRBB	S1008K			
RRT	5/8	**58.7** 2 5/16	**81.0** 3 3/16	**14.2** 9/16	**63.5** 2 1/2	**7.1** 9/32	**49.2** 1 15/16	**3.81** 0.150	**23.8** 15/16	**5.6** 7/32	**28.6** 1 1/8	**6.4** 1/4	**0.15** 0.006	**2.54** 0.100	**10.3** 13/32	1010KRRB	S1010K	40MST	**2650** 600	**0.213** 0.47
RRT	**17**															E17KRRB	SE17K			
RRT	3/4	**66.7** 2 5/8	**90.5** 3 9/16	**15.8** 5/8	**71.4** 2 13/16	**8.7** 11/32	**55.6** 2 3/16	**4.22** 0.166	**25.0** 63/64	**6.4** 1/4	**33.3** 1 5/16	**7.9** 5/16	**0.53** 0.021	**2.92** 0.115	**12.7** 1/2	**1012KRRB**	**S1012K**	47MST	**3100** 700	**0.299** 0.66
RRT	**20**															E20KRRB	SE20K			
RRT	7/8															1014KRRB	S1014K			
RRT	15/16	**71.0** 2 51/64	**95.2** 3 3/4	**17.4** 11/16	**76.2** 3	**8.7** 11/32	**60.3** 2 3/8	**4.22** 0.166	**25.0** 63/64	**7.1** 9/32	**38.1** 1 1/2	**7.9** 5/16	**0.53** 0.021	**2.92** 0.115	**12.7** 1/2	**1015KRRB**	**S1015K**	52MST	**3550** 800	**0.331** 0.73
RRT	1															1100KRRB	S1100K			
RRT	**25**															E25KRRB	SE25K			
RRT	1 1/16															1101KRRB	S1103K			
RRT	1 1/8															**1102KRRB**	**S1102K**			
RRT	1 3/16	**84.1** 3 5/16	**112.7** 4 7/16	**17.4** 11/16	**90.5** 3 9/16	**10.3** 13/32	**71.4** 2 13/16	**5.28** 0.208	**29.0** 1 9/64	**6.7** 17/64	**44.5** 1 3/4	**9.5** 3/8	**0.28** 0.011	**2.64** 0.104	**15.1** 19/32	1103KRRB	S1103K	62MST	**4900** 1100	**0.531** 1.17
RRT	1 1/4 S															1103KRRB3	S1103K3			
RRT	**30**															E30KRRB	SE30K			
RRT	1 1/4															1104KRRB	S1104K			
RRT	1 5/16															**1105KRRB**	**S1105K**			
RRT	1 3/8	**93.7** 3 11/16	**125.4** 4 15/16	**22.2** 7/8	**100.0** 3 15/16	**10.3** 13/32	**81.0** 3 3/16	**5.28** 0.208	**32.1** 1 17/64	**6.7** 17/64	**54.0** 2 1/8	**9.5** 3/8	**0.28** 0.011	**2.64** 0.104	**15.1** 19/32	1106KRRB	S1106K	72MST	**6220** 1400	**0.476** 1.05
RRT	1 7/16															1107KRRB	S1107K			
RRT	**35**															E35KRRB	SE35K			

[1]Stampings must be ordered in pairs to assemble bearing.
[2]Thrust ratings for stamping are 50 percent of radial ratings.
NOTE: Shaft diameter with an S = smaller housing.

RATR, RRTR TRIANGLE FLANGETTE UNITS

- These units are similar to standard 47MS, 52MS, 62MS and 72MS, except the stamping is triangular instead of round.
- These units are used where space is limited or where it is necessary to cut off one or more sides of the standard flangette stamping.
- The RA-RRB and KRRB may be used with this stamping, as with other types of flangettes.
- All units are non-relubricatable.

Suggested shaft tolerances:

½ in. – 1 7/16 in., nominal to -0.013 mm, -0.0005 in.;

To order, specify UNIT and SHAFT DIAMETER.

Example: RATR 1 in. flangette or RRTR 1 in. flangette.

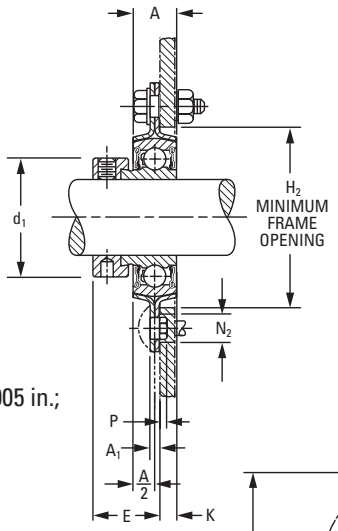

RATR Series

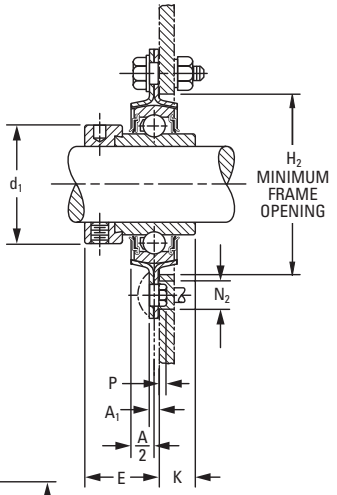

RRTR Series

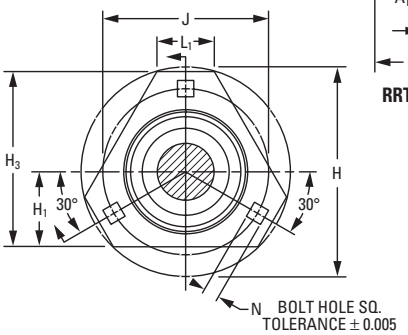

BEARING DATA

Unit	Bearing No.	Dimensions and Load Ratings
RATR	RA-RRB	Page A-48
RRTR	-KRRB	Page A-32

Unit	Shaft Dia.	H_3	H	A	J	N	H_2	A_1	E	K	d_1	H_1	L_1	Bolt Size	Short Shank P	Long Shank P	Flange Hole Diam. to Clear Sq. Shank N_2	Bearing No.	Collar No.	Stamping[1] Size	Stamping[1] Radial Load Rating[2]	Unit Wt.
	in. **mm**	**mm** in.	**mm** in.	**mm** in.	**mm** in.	**mm** in.	**mm** in.	**mm** in.	**mm** in.	**mm** in.	**mm** in.	**mm** in.	**mm** in.	**mm** in.	**mm** in.	**mm** in.	**mm** in.				**N** lbs.	**kg** lbs.
RATR	¾	**76.2**	**90.5**	**15.8**	**71.4**	**8.7**	**55.6**	**4.22**	**25.0**	**6.4**	**33.3**	**33.3**	**27.0**	**7.9**	**0.15**	**2.54**	**12.7**	RA012RRB	S1012K	47MSTR	**3100**	**0.313**
RATR	**20**	3	3 9/16	5/8	2 13/16	11/32	2 3/16	0.166	63/64	1/4	1 5/16	1 5/16	1 1/16	5/16	0.006	0.100	1/2	RAE20RRB	SE20K		700	0.69
RATR	7/8																	RA014RRB	S1014K			
RATR	15/16	**79.4**	**95.2**	**17.4**	**76.2**	**8.7**	**60.3**	**4.22**	**25.0**	**7.1**	**38.1**	**34.9**	**27.8**	**7.9**	**0.53**	**2.92**	**12.7**	RA015RRB	S1015K	52MSTR	**3550**	**0.354**
RATR	1	3 1/8	3 3/4	11/16	3	11/32	2 3/8	0.166	63/64	9/32	1 1/2	1 3/8	1 3/32	5/16	0.021	0.115	1/2	RA100RRB	S1100K		800	0.78
RATR	**25**																	RAE25RRB	SE25K			
RATR	1 1/16																	RA101RRB	S1103K			
RATR	1 1/8																	RA102RRB	S1102K			
RATR	1 3/16	**93.7**	**112.7**	**17.4**	**90.5**	**10.3**	**71.4**	**5.28**	**29.0**	**6.7**	**44.5**	**38.1**	**25.4**	**9.5**	**0.28**	**2.64**	**15.1**	RA103RRB	S1103K	62MSTR	**4900**	**0.526**
RATR	1 1/4 S	3 11/16	4 7/16	11/16	3 9/16	13/32	2 13/16	0.208	1 9/64	17/64	1 3/4	1 1/2	1	3/8	0.011	0.104	19/32	RA103RRB2	S1103K3		1100	1.16
RATR	**30**																	RAE30RRB	SE30K			
RATR	1 1/4																	RA104RRB	S1104K			
RATR	1 5/16																	RA105RRB	S1105K			
RATR	1 3/8	**105.6**	**127.0**	**19.0**	**100.0**	**10.3**	**81.0**	**5.28**	**32.1**	**6.7**	**54.0**	**44.4**	**32.1**	**9.5**	**0.028**	**2.64**	**15.1**	RA106RRB	S1106K	72MSTR	**6300**	**0.703**
RATR	1 7/16	4 5/32	5	3/4	3 15/16	13/32	3 3/16	0.208	1 17/64	17/64	2 1/8	1 3/4	1 17/64	3/8	0.011	0.104	19/32	RA107RRB	S1107K		1400	1.55
RATR	**35**																	RAE35RRB	SE35K			

[1]Stampings must be ordered in pairs to assemble bearing.
[2]Thrust ratings for stamping are 50 percent of radial ratings.
NOTE: Shaft diameter with an S = smaller housing.

Continued on next page.

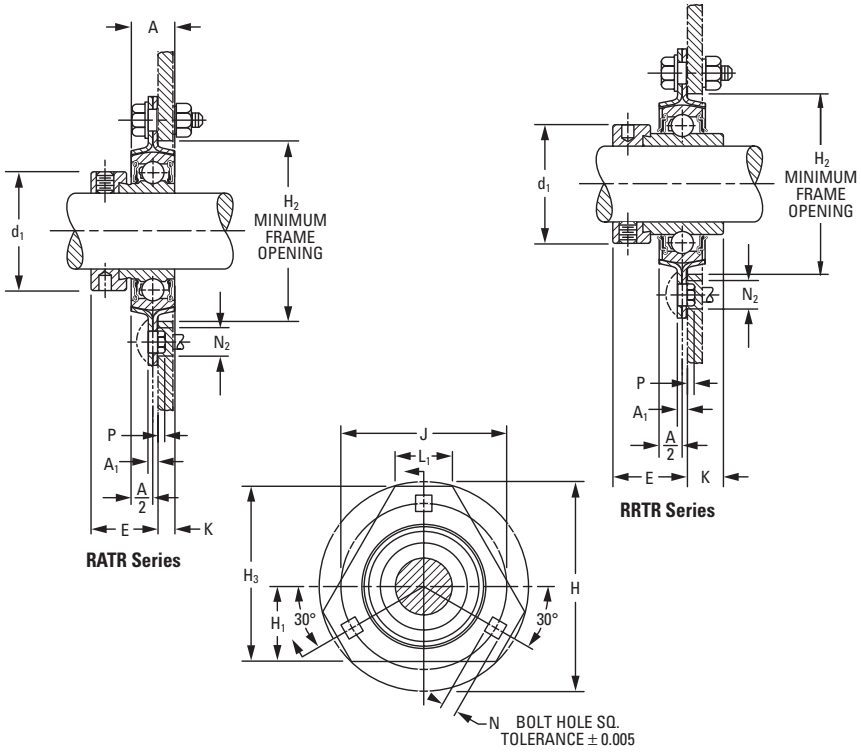

Continued from previous page.

Unit	Shaft Dia.	H_3	H	A	J	N	H_2	A_1	E	K	d_1	H_1	L_1	Bolt Size	Short Shank P	Long Shank P	Flange Hole Diam. to Clear Sq. Shank N_2	Bearing No.	Collar No.	Stamping[1] Size	Stamping[1] Radial Load Rating[2]	Unit Wt.
	in. **mm**	**mm** in.	**mm** in.	**mm** in.	**mm** in.	**mm** in.	**mm** in.	**mm** in.	**mm** in.	**mm** in.	**mm** in.	**mm** in.	**mm** in.	**mm** in.	**mm** in.	**mm** in.	**mm** in.				**N** lbs.	**kg** lbs.
RRTR	3/4	**76.2**	**90.5**	**15.8**	**71.4**	**8.7**	**55.6**	**4.22**	**28.6**	**15.1**	**33.3**	**33.3**	**2.07**	**7.9**	**0.15**	**2.54**	**12.7**	1012KRRB	S1012K	47MSTR	**3100**	**0.313**
RRTR	**20**	3	3 9/16	5/8	2 13/16	11/32	2 3/16	0.166	1 1/8	19/32	1 5/16	1 5/16	1 1/16	5/16	0.006	0.100	1/2	E20KRRB	SE20K		700	0.69
RRTR	7/8																	1014KRRB	S1014K			
RRTR	15/16	**79.4**	**95.2**	**17.4**	**76.2**	**8.7**	**60.3**	**4.22**	**28.6**	**15.1**	**38.1**	**34.9**	**27.8**	**7.9**	**0.53**	**2.92**	**12.7**	1015KRRB	S1015K	52MSTR	**3550**	**0.354**
RRTR	1	3 1/8	3 3/4	11/16	3	11/32	2 3/8	0.166	1 1/8	19/32	1 1/2	1 3/8	1 3/32	5/16	0.021	0.115	1/2	1100KRRB	S1100K		800	0.78
RRTR	**25**																	E25KRRB	SE25K			
RRTR	1 1/16																	1101KRRB	S1103K			
RRTR	1 1/8																	1102KRRB	S1102K			
RRTR	1 3/16	**93.7**	**112.7**	**17.4**	**90.5**	**10.3**	**71.4**	**5.28**	**32.5**	**15.9**	**44.5**	**38.1**	**25.4**	**9.5**	**0.28**	**2.64**	**15.1**	1103KRRB	S1103K	62MSTR	**4900**	**0.526**
RRTR	1 1/4 S	3 11/16	4 7/16	11/16	3 9/16	13/32	2 13/16	0.208	1 9/32	5/8	1 3/4	1 1/2	1	3/8	0.011	0.104	19/32	1103KRRB3	S1103K3		1100	1.16
RRTR	**30**																	E30KRRB	SE30K			
RRTR	1 1/4																	1104KRRB	S1104K			
RRTR	1 5/16																	1105KRRB	S1105K			
RRTR	1 3/8	**105.6**	**127.0**	**19.0**	**100.0**	**10.3**	**81.0**	**5.28**	**34.9**	**16.3**	**54.0**	**44.4**	**32.1**	**9.5**	**.028**	**2.64**	**15.1**	1106KRRB	S1106K	72MSTR	**6300**	**0.703**
RRTR	1 7/16	4 5/32	5	3/4	3 15/16	13/32	3 3/16	0.208	1 3/8	41/64	2 1/8	1 3/4	1 17/64	3/8	0.011	0.104	19/32	1107KRRB	S1107K		1400	1.55
RRTR	**35**																	E35KRRB	SE35K			

[1]Stampings must be ordered in pairs to assemble bearing.
[2]Thrust ratings for stamping are 50 percent of radial ratings.
NOTE: Shaft diameter with an S = smaller housing.

GRA, GRR RELUBRICATABLE FLANGETTE UNITS

- These units are supplements to the standard non-relubricatable type.
- These units are zinc-plated and designed for relubrication in applications where excessive moisture and severe contamination are present.
- The relubricatable flangettes are dimensionally interchangeable with the non-relubricated types. Load ratings also are the same.
- The relubricatable units incorporate G-KRRB bearings and GRA-RRB inner-ring bearings with positive-contact, land-riding seals and self-locking collars.
- The two stampings are needed to make a complete relubricatable flangette. Stamping A contains the boss for the grease fitting and a grease groove to allow grease to enter holes in the outer ring of the bearing. Stamping B contains a similar groove for the same purpose. With the grease groove in both stampings, the bearing can be reversed in the housing and still be relubricated.

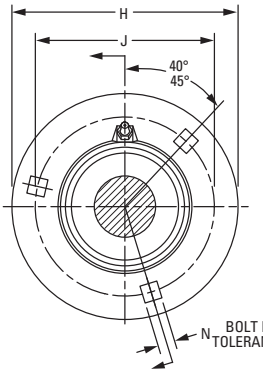

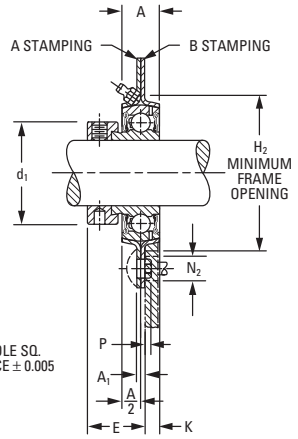

GRA Series

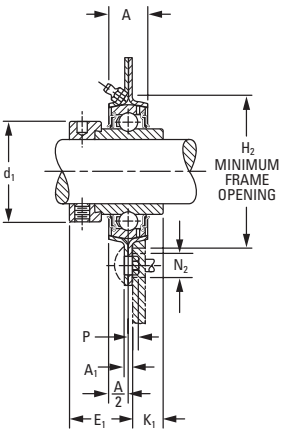

GRR Series

Suggested shaft tolerances:

1/2 in. – 1 15/16 in., nominal to -0.013 mm, -0.0005 in.;
2 in. – 2 3/16 in., nominal to -0.025 mm, -0.0010 in.

To order, specify UNIT and SHAFT DIAMETER.

Example: GRA 1 in. flangette.

BEARING DATA

Unit	Bearing No.	Dimensions and Load Ratings
GRA	GRA-RRB	Page A-50
GRR	G-KRRB	Page A-34

Unit	Shaft Dia.	H	A	J	N	H_2	A_1	E	E_1	K	K_1	d_1	Short Shank P	Long Shank P	Flange Hole Diam. to Clear Sq. Shank N_2	Bearing No. (GRA)	Bearing No. (GRR)	Collar No.	Stamping Radial Load Rating[1]
	in. **mm**	**mm** in.	**mm** in.	**mm** in.	**mm** in.	**mm** in.	**mm** in.	**mm** in.	**mm** in.	**mm** in.	**mm** in.	**mm** in.	**mm** in.	**mm** in.	**mm** in.	(GRA)	(GRR)		**N** lbs.
G52MSA & G52MSB	13/16	**95.2** 3 3/4	**17.40** 11/16	**76.2** 3	**8.7** 11/32	**60.3** 2 3/8	**4.22** 0.166	**25.4** 1	**29.0** 1 9/64	**6.7** 17/64	**13.5** 17/32	**38.1** 1 1/2	**0.53** 0.021	**2.92** 0.115	**12.7** 1/2	GRA013RRB	G1013KRRB	S1013K	**7700** 1730
	7/8															GRA014RRB	G1014KRRB	S1014K	
	15/16															GRA015RRB	G1015KRRB	S1015K	
	1															GRA100RRB	G1100KRRB	S1100K	
	25															GRAE25RRB	GE25KRRB	SE25K	
G62MSA & G62MSB	1 1/16	**112.7** 4 7/16	**19.05** 3/4	**90.5** 3 9/16	**10.3** 13/32	**71.4** 2 13/16	**5.28** 0.208	**29.4** 1 5/32	**32.9** 1 19/64	**6.7** 17/64	**15.5** 39/64	**44.1** 1 47/64	**0.28** 0.011	**2.64** 0.104	**15.1** 19/32	GRA101RRB	G1101KRRB	S1103K	**11100** 2500
	1 1/8															GRA102RRB	G1102KRRB	S1102K	
	1 3/16															GRA103RRB	G1103KRRB	S1103K	
	1 1/4 S															GRA103RRB2	G1103KRRB3	S1103K3	
	30															GRAE30RRB	GE30KRRB	SE30K	
G72MSA & G72MSB	1 1/4	**122.2** 4 13/16	**22.20** 7/8	**100.0** 3 15/16	**10.3** 13/32	**81.0** 3 3/16	**6.80** 0.268	**32.9** 1 19/64	**35.7** 1 13/32	**7.9** 5/16	**15.5** 39/64	**54.0** 2 1/8	**0.28** 0.011	**2.64** 0.104	**15.1** 19/32	GRA104RRB	G1104KRRB	S1104K	**15100** 3400
	1 5/16															GRA105RRB	G1105KRRB	S1105K	
	1 3/8															GRA106RRB	G1106KRRB	S1106K	
	1 7/16															GRA107RRB	G1107KRRB	S1107K	
	35															GRAE35RRB	GE35KRRB	SE35K	

[1]Thrust ratings for stampings are 50 percent of radial ratings.
[2]Four bolt holes.
NOTE: Shaft diameter with an S = smaller housing.

Continued on next page.

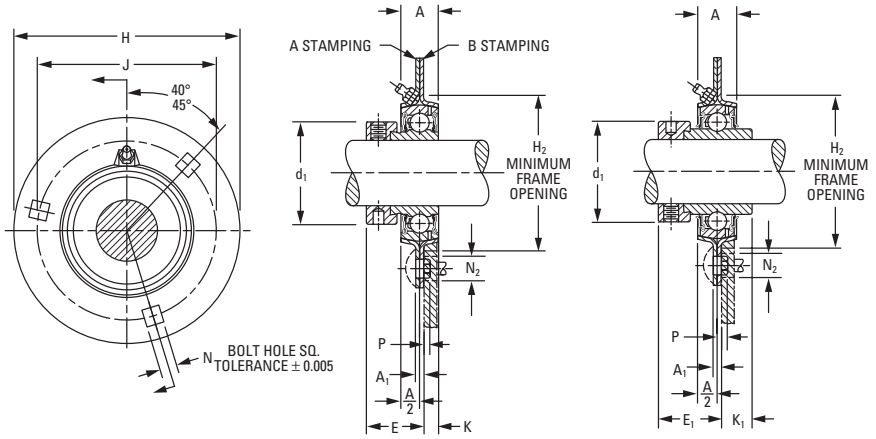

GRA Series **GRR Series**

Continued from previous page.

Unit	Shaft Dia.	H	A	J	N	H_2	A_1	E	E_1	K	K_1	d_1	Short Shank P	Long Shank P	Flange Hole Diam. to Clear Sq. Shank N_2	Bearing No. (GRA)	Bearing No. (GRR)	Collar No.	Stamping Radial Load Rating[1]
	in. **mm**	**mm** in.	**mm** in.	**mm** in.	**mm** in.	**mm** in.	**mm** in.	**mm** in.	**mm** in.	**mm** in.	**mm** in.	**mm** in.	**mm** in.	**mm** in.	**mm** in.	(GRA)	(GRR)		**N** lbs.
G80MSA[2] & G80MSB[2]	1 1/2 1 9/16 **40**	**147.6** 5 13/16	**31.80** 1 1/4	**119.1** 4 11/16	**13.5** 17/32	**90.4** 3 9/16	**7.56** 0.298	**36.5** 1 7/16	**38.9** 1 17/32	**12.3** 31/64	**17.9** 45/64	**60.3** 2 3/8	**0.33** 0.013	**2.72** 0.107	**19.4** 49/64	GRA108RRB GRA109RRB GRAE40RRB	G1108KRRB G1109KRRB GE40KRRB	S1108KT S1109KT SE40K	**19600** 4400
G85MSA[2] & G85MSB[2]	1 5/8 1 11/16 1 3/4 **45**	**149.2** 5 7/8	**31.8** 1 1/4	**120.6** 4 3/4	**13.5** 17/32	**96.8** 3 13/16	**7.56** 0.298	**36.5** 1 7/16	**38.9** 1 17/32	**11.9** 15/32	**17.9** 45/64	**63.5** 2 1/2	**0.33** 0.013	**2.72** 0.107	**19.4** 49/64	GRA110RRB GRA111RRB GRA112RRB GRAE45RRB	G1110KRRB G1111KRRB G1112KRRB GE45KRRB	S1110K S1111K S1112K SE45K	**20500** 4600
G90MSA[2] & G90MSB[2]	1 13/16 1 7/8 1 15/16 **50**	**155.6** 6 1/8	**25.4** 1	**127.0** 5	**13.5** 17/32	**101.6** 4	**8.34** 0.328	**36.9** 1 29/64	**42.5** 1 43/64	**8.3** 21/64	**20.6** 13/16	**69.8** 2 3/4	–	**1.96** 0.077	**19.4** 49/64	GRA113RRB GRA114RRB GRA115RRB GRAE50RRB	G1113KRRB G1114KRRB G1115KRRB GE50KRRB	S1113K S1114K S1115K SE50K	**22700** 5100
G100MSA & G100MSB	2 2 1/16 2 1/8 2 3/16 **55**	**166.7** 6 9/16	**31.8** 1 1/4	**138.1** 5 7/16	**13.5** 17/32	**112.7** 4 7/16	**8.34** 0.328	**40.5** 1 19/32	**47.6** 1 7/8	**11.9** 15/32	**23.8** 15/16	**76.2** 3	–	**1.96** 0.077	**19.4** 49/64	GRA200RRB GRA201RRB GRA202RRB GRA203RRB GRAE55RRB	G1200KRRB G1201KRRB G1202KRRB G1203KRRB GE55KRRB	S1200K S1201K S1202K S1203K SE55K	**28500** 6400

[1]Thrust ratings for stampings are 50 percent of radial ratings.
[2]Four bolt holes.
NOTE: Shaft diameter with an S = smaller housing.

RUBBER CARTRIDGES

RCSM, RCR, CR SERIES

- RCSM and RCR are quiet, synthetic, conductive-rubber cylindrical cartridges designed for domestic heating, air-conditioning, ventilating equipment and other applications that require noise-free operation.
- All units are available with the RA-RRB extended inner-ring bearings with positive-contact, land-riding seals and a self-locking collar.
- An initial supply of grease is provided in the one-piece, non-relubricatable cartridges.
- The Timken-patented CR unit was designed to accommodate the wide tolerances of hot or cold rolled #10-gage (0.134 in.), 3 ½ in. O.D., electric-resistance welded mechanical tubing, similar to what is found in post office conveyor systems.

To order, specify UNIT and SHAFT DIAMETER.

Example: RCSM ¾ in. or RCR ¾ in. or CR ¾ in.

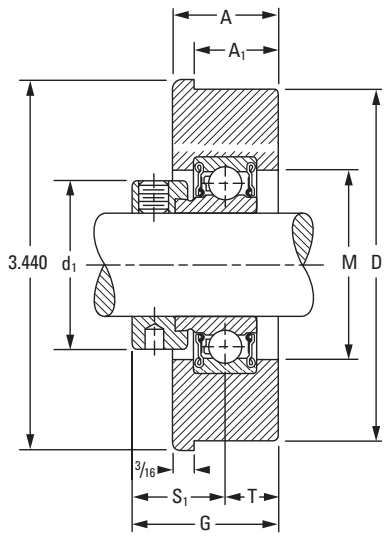

CR

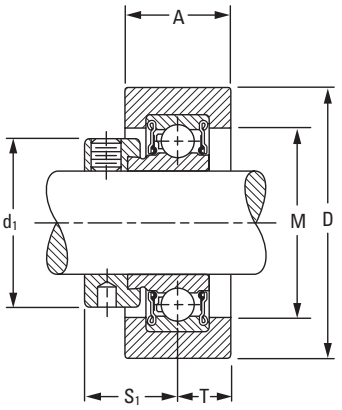

RCSM

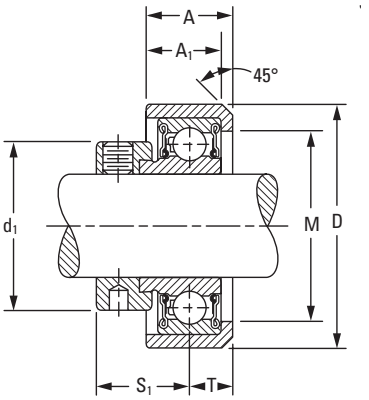

RCR

BEARING DATA

Unit	Bearing No.	Dimensions and Load Ratings
RCSM, RCR, CR	RA-RR	Page A-48

Unit	Shaft Dia.	D	A	A_1	G	M	d_1	S_1	T	Bearing No.[1]	Collar No.	Housing Radial Load Rating[2]	Unit Wt.
	in. **mm**	**mm** in.	**mm** in.	**mm** in.	**mm** in.	**mm** in.	**mm** in.	**mm** in.	**mm** in.			**N** lbs.	**kg** lbs.
RCSM SERIES – Suggested Housing Diameter = Nominal D ± 0.013 mm ± 0.005 in.													
RCSM RCSM RCSM	½ ⅝ **17**	**64.30** 2 17/32	**25.4** 1	–	–	**34.9** 1 3/8	**28.6** 1 1/8	**22.2** 7/8	**12.7** ½	RA008RR RA010RR RAE17RR	S1008K S1010K SE17K	**880** 200	**0.395** 0.87
RCSM RCSM	¾ **20**	**64.30** 2 17/32	**25.4** 1	–	–	**39.7** 1 9/16	**33.3** 1 5/16	**23.4** 59/64	**12.7** ½	RA012RR –	S1012K SE20K	**1120** 250	**0.472** 1.04
RCSM RCSM RCSM	15/16 1 **25**	**64.30** 2 17/32	**25.4** 1	–	–	**45.2** 1 25/32	**38.1** 1 ½	**23.4** 59/64	**12.7** ½	RA015RR RA100RR RAE25RR	S1015K S1100K SE25K	**1340** 300	**0.527** 1.16
LRCSM	1 3/16	**64.30** 2 17/32	**25.4** 1	–	–	**47.6** 1 7/8	**42.1** 1 21/32	**19.8** 25/32	**12.7** ½	RAL103NPP	LS103K	**1340** 300	**0.627** 1.38
RCSM SERIES – Suggested Housing Diameter = Nominal D -0.13 mm to -0.038 mm, -0.005 in. to -0.0015 in.													
LRCR	¾	**46.00** 1 13/16	**18.3** 23/32	**15.9** ⅝	–	**34.9** 1 3/8	**30.2** 1 3/16	**18.7** 47/64	**9.9** 25/64	RAL012NPP	LS012K	**880** 200	**0.272** 0.60
RCR RCR	1 **25**	**57.20** 2 ¼	**19.8** 25/32	**17.5** 11/16	–	**44.4** 1 ¾	**38.1** 1 ½	**23.4** 59/64	**9.9** 25/64	RA100RR RAE25RR	S1100K SE25K	**1340** 300	**0.409** 0.90
RCSM SERIES – Suggested Housing Diameter 82.73 mm to 81.76 mm, 3.257 in. to 3.219 in.													
CR CR	¾ **20**	**83.57** 3.29	**25.4** 1	**22.2** 7/8	**36.1** 1 27/64	**39.7** 1 9/16	**33.3** 1 5/16	**23.4** 59/64	**12.7** ½	RA012RR RAE20RR	S1012K SE20K	**670** 150	**0.318** 0.70
CR CR	1 **25**	**83.57** 3.29	**25.4** 1	**22.2** 7/8	**36.1** 1 27/64	**45.2** 1 25/32	**38.1** 1 ½	**23.4** 59/64	**12.7** ½	RA100RR RAE25RR	S1100K SE25K	**880** 200	**0.340** 0.75
LCR LCR	1 **25**	**83.57** 3.29	**25.4** 1	**20.6** 13/16	**33.3** 1 5/16	**39.7** 1 9/16	**36.1** 1 27/64	**19.8** 25/32	**14.3** 9/16	RAL100NPP RALE25NPP	S1100K SE25K	**880** 200	**0.309** 0.68

[1]Suffix for RA bearing is FS450 (RCSM and RCR series).
[2]Steady loads only. Thrust load is ⅓ radial load rating. Maximum suggested speed is 2400 RPM.

RABR HVAC SPECIAL SERIES

- This unit features a conductive rubber interliner to dissipate static charges.
- The quiet RA-RRB extended inner-ring bearings are prelubricated and have positive-contact, land-riding seals with self-locking collars.
- RABR units can be mounted in tri-arm brackets or pressed-steel stampings.
- Maximum suggested speed is 2400 RPM.

Suggested housing diameter =

Nominal (D) -0.130 mm – 0.380 mm; -0.005 in. – 0.015 in.

To order, specify UNIT and SHAFT DIAMETER.

Example: RABR 1 in.

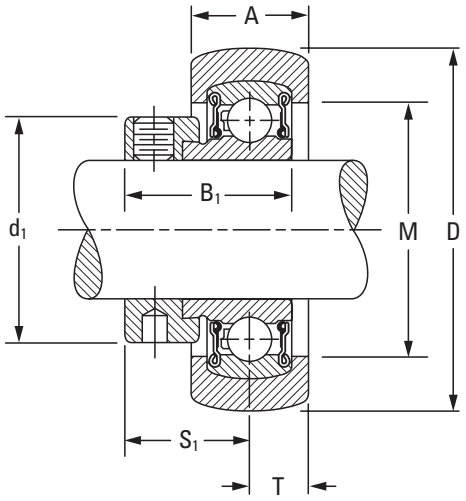

BEARING DATA

Unit	Bearing No.	Dimensions and Load Ratings
RABR	RA-RRB	Page A-48

Unit	Shaft Dia.	D	B_1	A	M	d_1	S_1	T	Bearing No.[1]	Collar No.	Housing Radial Load Rating[2]
	in. **mm**	**mm** in.	**mm** in.	**mm** in.	**mm** in.	**mm** in.	**mm** in.	**mm** in.			**N** lbs.
RABR	1/2								RA008RRB	S1008K	
RABR	5/8	**47.37** 1.865	**28.6** 1 1/8	**17.5** 11/16	**34.9** 1 3/8	**28.6** 1 1/8	**22.2** 7/8	**8.7** 11/32	RA010RRB	S1010K	**880** 200
RABR	**17**								RAE17RRB	SE17K	
RABR	3/4	**52.37** 2.062	**31.0** 1 7/32	**17.5** 11/16	**41.3** 1 5/8	**33.3** 1 5/16	**23.4** 59/64	**8.7** 11/32	RA012RRB	S1012K	**1120** 250
RABR	**20**								RAE20RRB	SE20K	
RABR	15/16								RA015RRB	S1015K	
RABR	1	**62.38** 2.456	**31.0** 1 7/32	**20.6** 13/16	**46.8** 1 27/32	**38.1** 1 1/2	**23.4** 59/64	**10.3** 13/32	RA100RRB	S1100K	**1340** 300
RABR	**25**								RAE25RRB	SE25K	
RABR	1 3/16	**62.38** 2.456	**35.7** 1 13/32	**20.6** 13/16	**46.8** 1 27/32	**44.4** 1 3/4	**28.6** 1 1/8	**10.3** 13/32	RAL103PP	LS103K	**1340** 300
RABR	**30**								RAE30PP3	SE30K	

[1]For replacement of bearings, specify suffix FS450.
[2]Thrust load is 1/3 radial load rating.
NOTE: Maximum suggested speed is 2400 RPM.

TAKE-UP UNITS

NLTU SERIES
SIDE-MOUNTED, PRESSED-STEEL

- The take-up frame incorporates RTU take-up units as shown on the following pages.
- The frame is designed for side mounting and made of welded steel.

To order a complete assembly, specify NLTU FRAME and RTU TAKE-UP UNIT.
Example: NLTU5 frame and RTU 1 11/16 in. If frame only is required, order by frame number. Example: NLTU3.

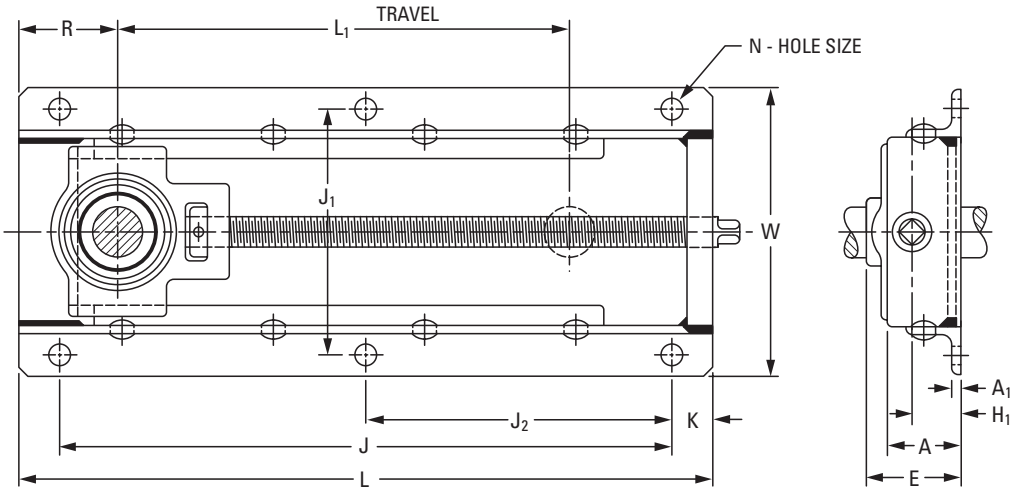

NLTU Frame No.	Shaft Dia.	L_1	R	J	L	A_1	H_1	E	J_1	W	A	J_2	K	N	Bolts 6 req'd.	Unit Wt.
	in.	**mm** in.	**mm** in.	**mm** in.	**mm** in.	**mm** in.	**mm** in.	**mm** in.	**mm** in.	**mm** in.	**mm** in.	**mm** in.	**mm** in.	**mm** in.	in.	**kg** lbs.
1	5/16, 3/4, 13/16, 7/8, 15/16, 1	**231.8** 9 1/8	**62.70** 2 15/32	**327.0** 12 7/8	**377.8** 14 7/8	**4.8** 3/16	**27.0** 1 1/16	**54.0** 2 1/8	**141.3** 5 9/16	**166.7** 6 9/16	**44.4** 1 3/4	**163.5** 6 7/16	**25.4** 1	**12.7** 1/2	7/16	**3.691** 8.13
3	1 1/16, 1 1/8, 1 3/16, 1 1/4, 1 5/16, 1 3/8, 1 7/16	**290.5** 11 7/16	**64.23** 2 17/32	**392.1** 15 7/16	**432.2** 17 7/16	**4.8** 3/16	**31.8** 1 1/4	**61.9** 2 7/16	**154.0** 6 1/16	**179.4** 7 1/16	**50.8** 2	**196.1** 7 23/32	**25.4** 1	**12.7** 1/2	7/16	**5.003** 11.02
		290.5 11 7/16	**61.90** 2 7/16	**392.1** 15 7/16	**432.2** 17 7/16	**4.8** 3/16	**31.8** 1 1/4	**64.3** 2 17/32	**154** 6 1/16	**179.4** 7 1/16	**50.8** 2	**196.1** 7 23/32	**25.4** 1	**12.7** 1/2	7/16	
5	1 1/2, 1 9/16, 1 5/8, 1 11/16, 1 3/4, 1 13/16, 1 7/8, 1 15/16	**298.4** 11 3/4	**92.90** 3 21/32	**444.5** 17 1/2	**501.6** 19 3/4	**4.8** 3/16	**36.5** 1 7/16	**71.4** 2 13/16	**185.7** 7 5/16	**223.8** 8 13/16	**57.2** 2 1/4	**222.5** 8 3/4	**28.6** 1 1/8	**14.3** 9/16	1/2	**8.217** 18.10
7	2, 2 1/16, 2 1/8, 2 3/16, 2 1/4, 2 5/16, 2 3/8, 2 7/16	**362.0** 14 1/4	**92.90** 3 21/32	**546.1** 21 1/2	**603.2** 23 3/4	**4.8** 3/16	**38.1** 1 1/2	**81.8** 3 7/32	**219.1** 8 5/8	**265.1** 10 7/16	**63.5** 2 1/2	**273.0** 10 3/4	**28.6** 1 1/8	**15.9** 5/8	9/16	**12.312** 27.12
		362.0 14 1/4	**92.90** 3 21/32	**546.1** 21 1/2	**603.2** 23 3/4	**4.8** 3/16	**38.1** 1 1/2	**84.9** 3 11/32	**219.1** 8 5/8	**265.1** 10 7/16	**63.5** 2 1/2	**273.0** 10 3/4	**28.6** 1 1/8	**15.9** 5/8	9/16	

TU SERIES
TOP-MOUNTED, CAST-IRON

- The take-up frame incorporates RTU take-up units as shown on the following pages.
- The frame is designed for top mounting and is made of cast-iron.

To order a complete assembly, specify TU FRAME and RTU or TU TAKE-UP UNIT.
Example: TU5 frame and RTU 1 11/16 in.

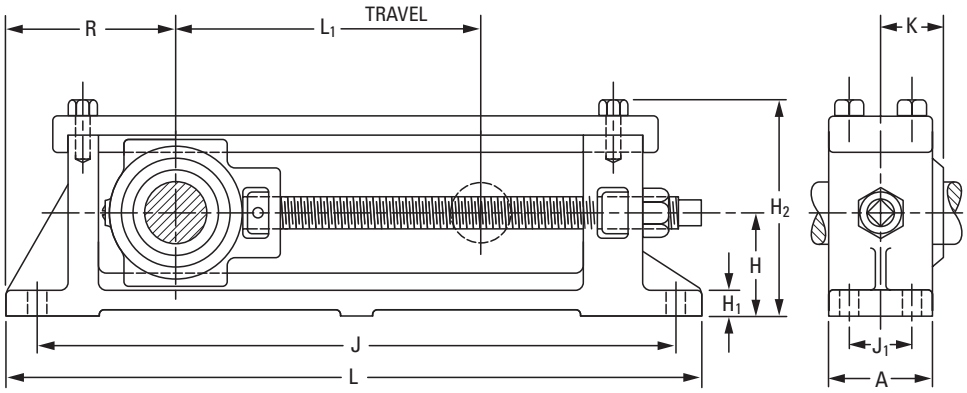

TU Frame No.	Shaft Dia.	L_1	R	J	L	H_1	H	H_2	J_1	A	K	Bolts 4 req'd.	Unit Wt.
	in.	**mm** in.	**mm** in.	**mm** in.	**mm** in.	**mm** in.	**mm** in.	**mm** in.	**mm** in.	**mm** in.	**mm** in.	in.	**kg** lbs.
1	3/4, 13/16, 7/8, 15/16, 1	**203.2** 8	**114.3** 4 1/2	**419.2** 16 1/2	**469.9** 18 1/2	**14.3** 9/16	**63.5** 2 1/2	**131.0** 5 5/32	**34.9** 1 3/8	**54.0** 2 1/8	–	3/8	**7.491** 16.50
3	1 1/16, 1 1/8, 1 3/16, 1 1/4, 1 5/16, 1 3/8, 1 7/16	**254.0** 10	**127.0** 5	**492.1** 19 3/8	**542.9** 21 3/8	**15.9** 5/8	**71.4** 2 13/16	**149.2** 5 7/8	**38.1** 1 1/2	**65.1** 2 9/16	–	7/16	**11.464** 25.25
5	1 1/2, 1 9/16, 1 5/8, 1 11/16, 1 3/4, 1 13/16, 1 7/8, 1 15/16	**254.0** 10	**139.7** 5 1/2	**530.2** 20 7/8	**581.0** 22 7/8	**19.0** 3/4	**82.6** 3 1/4	**171.4** 6 3/4	**50.8** 2	**88.9** 3 1/2	–	1/2	**20.203** 44.50
7	2, 2 1/16, 2 1/8, 2 3/16, 2 1/4, 2 5/16, 2 3/8, 2 7/16	**304.8** 12	**168.3** 6 5/8	**644.5** 25 3/8	**708.0** 27 7/8	**22.2** 7/8	**101.6** 4	**211.9** 8 11/32	**63.5** 2 1/2	**101.6** 4	–	5/8	**36.320** 80.00
9	2 11/16, 2 15/16 (1)	**304.8** 12	**193.7** 7 5/8	**695.3** 27 3/8	**771.5** 30 3/8	**25.4** 1	**117.5** 4 5/8	**243.7** 9 19/32	**82.6** 3 1/4	**120.6** 4 3/4	**65.1** 2 9/16	5/8	**52.778** 116.25

(1)Dimension K is 69.1 mm (2 23/32 in.) for 2 15/16 in. shaft diameters.

RTU INDUSTRIAL SERIES

- These ball bearing take-up units are used where shaft adjustment and belt-tightening devices are required, such as in conveyor applications.
- Both types of take-up units incorporate self-aligning, B-type wide-inner-ring ball bearings with self-locking collars.
- These units use a G-KRRB, R-seal type wide inner ring ball bearing.
- These units provide compact, efficient supports for adjustable shafts and conveyer take-up pulleys.
- The units are factory-prelubricated. A grease fitting is provided for relubrication if required.
- See the preceding page for take-up frames to fit these units.
- Contact your Timken engineer to discuss highly corrosive applications (e.g., food processing, chemical exposure) where Timken thin-dense chrome-coated bearings can be utilized.

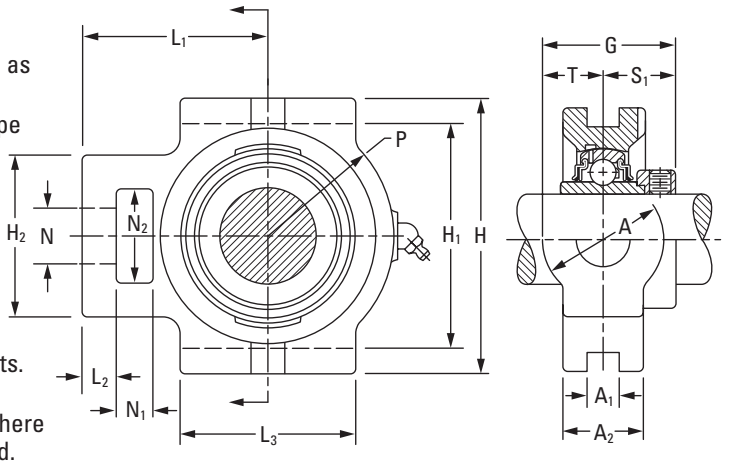

Suggested shaft tolerances:

3/4 in. – 1 15/16 in., nominal to -0.013 mm, -0.0005 in.;

2 in. – 2 7/16 in., nominal to -0.025 mm, -0.0010 in.

To order, specify UNIT and SHAFT DIAMETER.

Example: RTU 3/4 in. or RTU 2 11/16 in.

BEARING DATA

Unit	Bearing No.	Dimensions and Load Ratings
RTU	G-KRRB	Page A-34

Unit	Shaft Dia.	G	T	S_1	A_2	A_1	A	L_1	H_2	N	N_2	L_2	N_1	P	L_3	H_1	H	Bearing No.	Collar No.	Housing No.	Unit Wt.
	in. **mm**	**mm** in.	**mm** in.	**mm** in.	**mm** in.	**mm** in.	**mm** in.	**mm** in.	**mm** in.	**mm** in.	**mm** in.	**mm** in.	**mm** in.	**mm** in.	**mm** in.	**mm** in.	**mm** in.				**kg** lbs.
RTU RTU	3/4 **20**	**47.6** 1 7/8	**20.6** 13/16	**27.0** 1 1/16	**34.1** 1 11/32	**13.5** 17/32	**41.3** 1 5/8	**67.5** 2 21/32	**57.2** 2 1/4	**19.0** 3/4	**31.8** 1 1/4	**12.7** 1/2	**15.9** 5/8	**49.2** 1 15/16	**57.2** 2 1/4	**76.2** 3	**92.1** 3 5/8	G1012KRRB GE20KRRB	S1012K SE20K	T-18832	**1.444** 3.18
RTU RTU RTU RTU	7/8 15/16 1 **25**	**42.9** 1 15/16	**22.2** 7/8	**27.0** 1 1/16	**37.3** 1 15/32	**13.5** 17/32	**44.4** 1 3/4	**67.5** 2 21/32	**57.2** 2 1/4	**19.0** 3/4	**31.8** 1 1/4	**12.7** 1/2	**15.9** 5/8	**34.9** 1 3/8	**57.2** 2 1/4	**76.2** 3	**92.1** 3 5/8	G1014KRRB G1015KRRB G1100KRRB GE25KRRB	S1014K S1015K S1100K SE25K	T-18696	**1.498** 3.30
RTU RTU RTU RTU	1 1/16 1 1/8 1 3/16 **30**	**55.6** 2 3/16	**25.4** 1	**30.2** 1 3/16	**38.1** 1 1/2	**13.5** 17/32	**50.8** 2	**72.2** 2 27/32	**61.9** 2 7/16	**22.2** 7/8	**36.5** 1 7/16	**12.7** 1/2	**15.9** 5/8	**41.3** 1 5/8	**63.5** 2 1/2	**88.9** 3 1/2	**104.8** 4 1/8	G1101KRRB G1102KRRB G1103KRRB GE30KRRB	S1101K S1102K S1103K SE30K	T-18694	**1.920** 4.23
RTU RTU RTU RTU RTU	1 1/4 1 5/16 1 3/8 1 7/16 **35**	**54.8** 2 5/32	**22.2** 7/8	**32.5** 1 9/32	**36.5** 1 7/16	**13.5** 17/32	**44.5** 1 3/4	**74.6** 2 15/16	**63.5** 2 1/2	**22.2** 7/8	**36.5** 1 7/16	**12.7** 1/2	**15.9** 5/8	**49.2** 1 15/16	**69.8** 2 3/4	**88.9** 3 1/2	**104.8** 4 1/8	G1104KRRB G1105KRRB G1106KRRB G1107KRRB GE35KRRB	S1104K S1105K S1106K S1107K SE35K	T-18692	**2.025** 4.46
RTU RTU RTU	1 1/2 1 9/16 **40**	**67.5** 2 21/32	**32.5** 1 9/32	**34.9** 1 3/8	**44.4** 1 3/4	**17.5** 11/16	**65.1** 2 9/16	**88.1** 3 15/32	**82.6** 3 1/4	**28.6** 1 1/8	**49.2** 1 15/16	**15.9** 5/8	**19.0** 3/4	**53.3** 2 3/32	**82.6** 3 1/4	**100.8** 3 31/32	**120.6** 4 3/4	G1108KRRB G1109KRRB GE40KRRB	S1108KT S1109K SE40K	T-18834	**3.314** 7.30
RTU RTU RTU RTU	1 5/8 1 11/16 1 3/4 **45**	**67.5** 2 21/32	**32.5** 1 9/32	**34.9** 1 3/8	**44.4** 1 3/4	**17.5** 11/16	**65.1** 2 9/16	**88.1** 3 15/32	**82.6** 3 1/4	**28.6** 1 1/8	**49.2** 1 15/16	**15.9** 5/8	**19.0** 3/4	**53.3** 2 3/32	**82.6** 3 1/4	**100.8** 3 31/32	**120.6** 4 3/4	G1110KRRB G1111KRRB G1112KRRB GE45KRRB	S1110K S1111K S1112K SE45K	T-18762	**3.164** 6.97
RTU RTU RTU	1 7/8 1 15/16 **50**	**70.6** 2 25/32	**32.5** 1 9/32	**38.1** 1 1/2	**49.2** 1 15/16	**17.5** 11/16	**65.1** 2 9/16	**91.3** 3 19/32	**82.6** 3 1/4	**28.6** 1 1/8	**49.2** 1 15/16	**15.9** 5/8	**19.0** 3/4	**59.5** 2 11/32	**85.7** 3 3/8	**100.8** 3 31/32	**120.6** 4 3/4	G1114KRRB G1115KRRB GE50KRRB	S1114K S1115K SE50K	T-18690	**3.587** 7.90
RTU RTU RTU RTU	2 2 1/8 2 3/16 **55**	**77.0** 3 1/32	**34.9** 1 3/8	**43.7** 1 23/32	**55.6** 2 3/16	**27.0** 1 1/16	**69.8** 2 3/4	**119.9** 4 23/32	**101.6** 4	**34.9** 1 3/8	**63.5** 2 1/2	**19.0** 3/4	**31.8** 1 1/4	**69.1** 2 23/32	**101.6** 4	**129.4** 5 3/32	**149.2** 5 7/8	G1200KRRB G1202KRRB G1203KRRB GE55KRRB	S1201K S1202K S1203K SE55K	T-18828	**6.333** 13.95
RTU RTU RTU RTU	2 1/4 2 3/8 2 7/16 **60**	**81.8** 3 7/32	**34.9** 1 3/8	**46.8** 1 27/32	**52.4** 2 1/16	**27.0** 1 1/16	**69.8** 2 3/4	**119.9** 4 23/32	**101.6** 4	**34.9** 1 3/8	**63.5** 2 1/2	**19.0** 3/4	**31.8** 1 1/4	**69.1** 2 23/32	**101.6** 4	**129.4** 5 3/32	**149.2** 5 7/8	G1204KRRB G1206KRRB G1207KRRB GE60KRRB	S1204K S1206K S1207K SE60K	T-18830	**5.993** 13.20

YTU INDUSTRIAL SERIES

- Incorporates Shaft Guarding Technology, which reduces replacement time, provides shaft protection and prolongs the life of the shaft.
- Used where shaft adjustment and belt-tightening devices are required, such as conveyer applications.
- Incorporates self-aligning, B-type extra wide-inner-ring ball bearings with set screw lock.
- Provides compact, efficient supports for adjustable shafts and conveyor take-up pulleys.
- Factory-prelubricated. A grease fitting is provided for relubrication if required.
- See preceding pages for take-up frames to fit these units.
- Safety end caps are available for selected sizes.
- Contact your Timken engineer to discuss highly corrosive applications (e.g., food processing, chemical exposure) where Timken thin-dense chrome-coated bearings can be utilized.

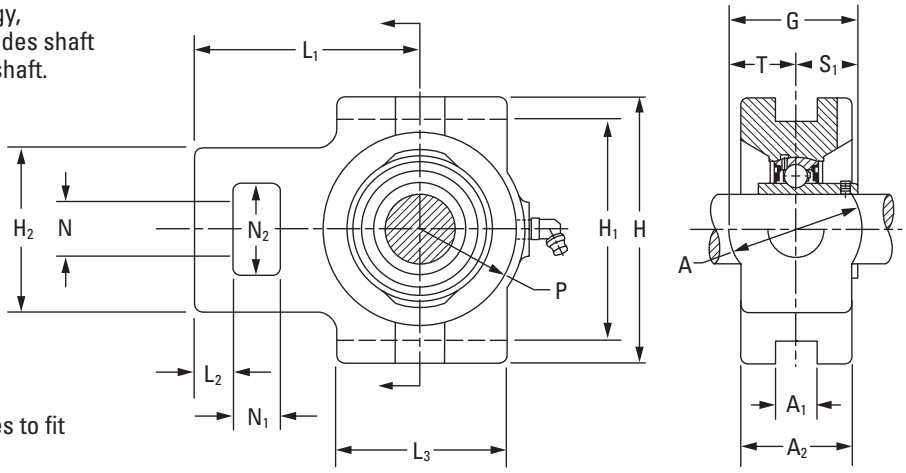

Suggested shaft tolerances:

1/2 in. – 1 15/16 in., nominal to -0.013 mm, -0.0005 in.;
2 in. – 2 7/16 in., nominal to -0.025 mm, -0.0010 in.

To order, specify UNIT and SHAFT DIAMETER.

Example: YTU 3/4 in.

BEARING DATA

Unit	Bearing No.	Dimensions and Load Ratings
YTU	GY-KRRB	Page A-44

Unit	Shaft Dia.	G	T	S_1	A_2	A_1	A	L_1	H_2	N	N_2	L_2	N_1	P	L_3	H_1	H	Bearing No.	Housing No.
	in. **mm**	**mm** in.	**mm** in.	**mm** in.	**mm** in.	**mm** in.	**mm** in.	**mm** in.	**mm** in.	**mm** in.	**mm** in.	**mm** in.	**mm** in.	**mm** in.	**mm** in.	**mm** in.	**mm** in.		
YTU SGT YTU SGT	3/4 **20**	**39.7** 1 9/16	**20.6** 13/16	**19.00** 0.748	**34.1** 1 11/32	**13.5** 17/32	**41.3** 1 5/8	**67.5** 2 21/32	**57.2** 2 1/4	**19.0** 3/4	**31.8** 1 1/4	**12.7** 1/2	**15.9** 5/8	**33.3** 1 5/16	**57.2** 2 1/4	**76.2** 3	**92.1** 3 5/8	GY1012KRRB SGT GYE20KRRB SGT	T-18832
YTU SGT YTU SGT YTU SGT YTU SGT	7/8 15/16 1 **25**	**42.9** 1 11/16	**22.2** 7/8	**20.60** 0.81	**37.3** 1 15/32	**13.5** 17/32	**44.4** 1 3/4	**67.5** 2 21/32	**57.2** 2 1/4	**19.0** 3/4	**31.8** 1 1/4	**12.7** 1/2	**15.9** 5/8	**34.9** 1 3/8	**57.2** 2 1/4	**76.2** 3	**92.1** 3 5/8	GY1014KRRB SGT GY1015KRRB SGT GY1100KRRB SGT GYE25KRRB SGT	T-18696
YTU SGT YTU SGT YTU SGT	1 1/8 1 3/16 **30**	**48.8** 1 59/64	**25.4** 1	**23.24** 0.915	**38.1** 1 1/2	**13.5** 17/32	**50.8** 2	**72.2** 2 27/32	**61.9** 2 7/16	**22.2** 7/8	**36.5** 1 7/16	**12.7** 1/2	**15.9** 5/8	**41.3** 1 5/8	**63.5** 2 1/2	**88.9** 3 1/2	**104.8** 4 1/8	GY1102KRRB SGT GY1103KRRB SGT GYE30KRRB SGT	T-18694
YTU SGT YTU SGT YTU SGT YTU SGT	1 1/4 1 3/8 1 7/16 **35**	**50.4** 1 63/64	**22.2** 7/8	**27.90** 1.1	**36.5** 1 7/16	**13.5** 17/32	**44.5** 1 3/4	**74.6** 2 15/16	**63.5** 2 1/2	**22.2** 7/8	**36.5** 1 7/16	**12.7** 1/2	**15.9** 5/8	**49.2** 1 15/16	**69.8** 2 3/4	**88.9** 3 1/2	**104.8** 4 1/8	GY1104KRRB SGT GY1106KRRB SGT GY1107KRRB SGT GYE35KRRB SGT	T-18692
YTU SGT YTU SGT	1 1/2 **40**	**62.7** 2 15/32	**32.5** 1 9/32	**30.20** 1.188	**44.4** 1 3/4	**17.5** 11/16	**65.1** 2 9/16	**88.1** 3 15/32	**82.6** 3 1/4	**28.6** 1 1/8	**49.2** 1 15/16	**15.9** 5/8	**19.0** 3/4	**53.3** 2 3/32	**82.6** 3 1/4	**100.8** 3 31/32	**120.6** 4 3/4	GY1108KRRB SGT GYE40KRRB SGT	T-18834
YTU SGT YTU SGT YTU SGT YTU SGT	1 5/8 1 11/16 1 3/4 **45**	**64.0** 2 33/64	**32.5** 1 9/32	**31.30** 1.233	**44.4** 1 3/4	**17.5** 11/16	**65.1** 2 9/16	**88.1** 3 15/32	**82.6** 3 1/4	**28.6** 1 1/8	**49.2** 1 15/16	**15.9** 5/8	**19.0** 3/4	**53.3** 2 3/32	**82.6** 3 1/4	**100.8** 3 31/32	**120.6** 4 3/4	GY1110KRRB SGT GY1111KRRB SGT GY1112KRRB SGT GYE45KRRB SGT	T-18762
YTU SGT YTU SGT	1 15/16 **50**	**65.0** 2 9/16	**32.5** 1 9/32	**32.50** 1.281	**49.2** 1 15/16	**17.5** 11/16	**65.1** 2 9/16	**91.3** 3 19/32	**82.6** 3 1/4	**28.6** 1 1/8	**49.2** 1 15/16	**15.9** 5/8	**19.0** 3/4	**59.5** 2 11/32	**85.7** 3 3/8	**100.8** 3 31/32	**120.6** 4 3/4	GY1115KRRB SGT GYE50KRRB SGT	T-18690
YTU SGT YTU SGT YTU SGT	2 2 3/16 **55**	**68.3** 2 11/16	**34.9** 1 3/8	**33.30** 1.312	**55.6** 2 3/16	**27.0** 1 1/16	**69.8** 2 3/4	**119.9** 4 23/32	**101.6** 4	**34.9** 1 3/8	**63.5** 2 1/2	**19.0** 3/4	**31.8** 1 1/4	**69.1** 2 23/32	**101.6** 4	**129.4** 5 3/32	**149.2** 5 7/8	GY1200KRRB SGT GY1203KRRB SGT GYE55KRRB SGT	T-18828
YTU SGT YTU SGT YTU SGT	2 1/4 2 7/16 **60**	**74.6** 2 15/16	**34.9** 1 3/8	**39.70** 1.562	**52.4** 2 1/16	**27.0** 1 1/16	**69.8** 2 3/4	**119.9** 4 23/32	**101.6** 4	**34.9** 1 3/8	**63.5** 2 1/2	**19.0** 3/4	**31.8** 1 1/4	**69.1** 2 23/32	**101.6** 4	**129.4** 5 3/32	**149.2** 5 7/8	GY1204KRRB SGT GY1207KRRB SGT GYE60KRRB SGT	T-18830

VTU STANDARD SERIES

- These units are used where shaft adjustment and belt-tightening devices are required (e.g., conveyor belt applications).
- This unit provides self-aligning, B-type wide-inner-ring ball bearings with self-locking collars.
- Provides compact, efficient supports for adjustable shafts and conveyor take-up pulleys.
- The units are factory-prelubricated. A grease fitting is provided for relubrication if required.
- See the preceding pages for take-up frames to fit these units.

Suggested shaft tolerances:

3/4 in. – 1 15/16 in., nominal to -0.013 mm, -0.0005 in.;
2 in. – 2 3/16 in., nominal to -0.025 mm, -0.0010 in.

To order, specify UNIT and SHAFT DIAMETER.

Example: VTU 3/4 in. or VTU 2 11/16 in.

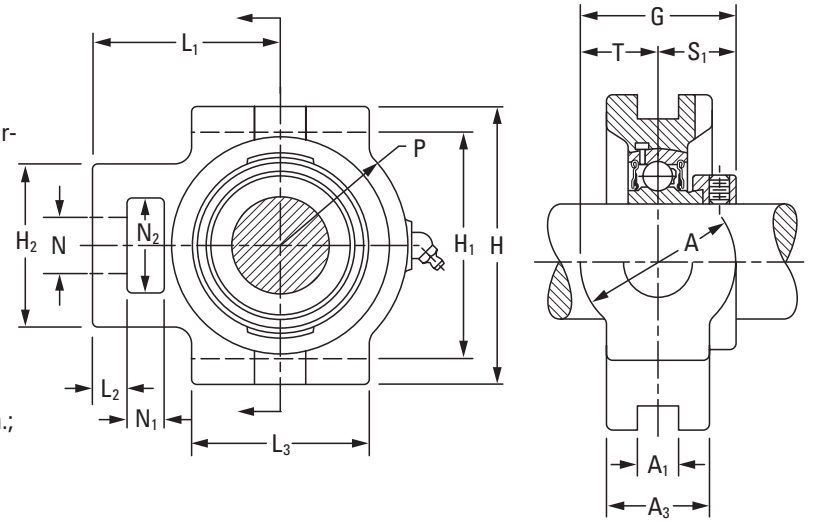

BEARING DATA

Unit	Bearing No.	Dimensions and Load Ratings
VTU	GRA-RRB	Page A-50

Unit	Shaft Dia.	G	T	S_1	A_3	A_1	A	L_1	H_2	N	N_2	L_2	N_1	P	L_3	H_1	H	Bearing No.	Collar No.	Housing No.	Unit Wt.
	in. **mm**	**mm** in.	**mm** in.	**mm** in.	**mm** in.	**mm** in.	**mm** in.	**mm** in.	**mm** in.	**mm** in.	**mm** in.	**mm** in.	**mm** in.	**mm** in.	**mm** in.	**mm** in.	**mm** in.				**kg** lbs.
VTU	3/4	**44.1**	**20.6**	**23.4**	**34.1**	**13.5**	**41.3**	**67.5**	**57.2**	**19.0**	**31.8**	**12.7**	**15.9**	**33.3**	**57.2** 2	**76.2**	**92.1**	GRA012RRB	S1012K	T-18832	**1.372**
VTU	**20**	1 47/64	13/16	59/64	1 11/32	17/32	1 5/8	2 21/32	2 1/4	3/4	1 1/4	1/2	5/8	1 5/16	1/4	3	3 5/8	GRAE20RRB	SE20K		3.02
VTU	7/8																	GRA014RRB	S1014K	T-18696	
VTU	15/16	**45.2**	**22.2**	**23.0**	**37.3**	**13.5**	**44.4**	**67.5**	**57.2**	**19.0**	**31.8**	**12.7**	**15.9**	**34.9** 1	**57.2**	**76.2**	**92.1**	GRA015RRB	S1015K		**1.458**
VTU	1	1 25/32	7/8	29/32	1 15/32	17/32	1 3/4	2 21/32	2 1/4	3/4	1 1/4	1/2	5/8	3/8	2 1/4	3	3 5/8	GRA100RRB	S1100K		3.21
VTU	**25**																	GRAE25RRB	SE25K		
VTU	1 1/8																	GRA102RRB	S1102K	T-18694	
VTU	1 3/16	**52.0**	**25.4**	**27.0**	**38.1**	**13.5**	**50.8**	**72.2**	**61.9**	**22.2**	**36.5**	**12.7**	**15.9**	**41.3**	**63.5**	**88.9**	**104.8**	GRA103RRB	S1103K3		**1.862**
VTU	**30**	2 1/16	1	1 1/16	1 1/2	17/32	2	2 27/32	2 7/16	7/8	1 7/16	1/2	5/8	1 5/8	2 1/2	3 1/2	4 1/8	GRAE30RRB	SE30K		4.10
VTU	1 1/4																	GRA104RRB	S1104K	T-18692	
VTU	1 3/8	**51.6**	**22.2**	**29.4**	**36.5**	**13.5**	**44.5**	**74.6**	**63.5**	**22.2**	**36.5**	**12.7**	**15.9**	**49.2**	**69.8** 2	**88.9**	**104.8**	GRA106RRB	S1106K		**1.953**
VTU	1 7/16	2 1/32	7/8	1 5/32	1 7/16	17/32	1 3/4	2 15/16	2 1/2	7/8	1 7/16	1/2	5/8	1 15/16	3/4	3 1/2	4 1/8	GRA107RRB	S1107K		4.30
VTU	**35**																	GRAE35RRB	SE35K		
VTU	1 1/2	**65.0**	**32.5**	**32.5**	**44.4**	**17.5**	**65.1**	**88.1**	**82.6**	**28.6**	**49.2**	**15.9**	**19.0**	**53.3**	**82.6**	**100.8**	**120.6**	GRA108RRB	S1108KT	T-18834	**3.192**
VTU	**40**	2 9/16	1 9/32	1 9/32	1 3/4	11/16	2 9/16	3 15/32	3 1/4	1 1/8	1 15/16	5/8	3/4	2 3/32	3 1/4	3 31/32	4 3/4	GRAE40RRB	SE40K		7.03
VTU	1 5/8																	GRA110RRB	S1110K	T-18762	
VTU	1 11/16	**65.0**	**32.5**	**32.5**	**44.4**	**17.5**	**65.1**	**88.1**	**82.6**	**28.6**	**49.2**	**15.9**	**19.0**	**53.3**	**82.6**	**100.8**	**120.6**	GRA111RRB	S1111K		**3.009**
VTU	1 3/4	2 9/16	1 9/32	1 9/32	1 3/4	11/16	2 9/16	3 15/32	3 1/4	1 1/8	1 15/16	5/8	3/4	2 3/32	3 1/4	3 31/32	4 3/4	GRA112RRB	S1112K		6.63
VTU	**45**																	GRAE45RRB	SE45K		
VTU	1 7/8																	GRA114RRB	S1114K	T-18690	
VTU	1 15/16	**65.0**	**32.5**	**32.5**	**49.2**	**17.5**	**65.1**	**91.3**	**82.6**	**28.6**	**49.2**	**15.9**	**19.0**	**59.5**	**85.7**	**100.8**	**120.6**	GRA115RRB	S1115K		**3.342**
VTU	**50**	2 9/16	1 9/32	1 9/32	1 15/16	11/16	2 9/16	3 19/32	3 1/4	1 1/8	1 15/16	5/8	3/4	2 11/32	3 3/8	3 31/32	4 3/4	GRAE50RRB	SE50K		7.36
VTU	2																	GRA200RRB	S1200K	T-18828	
VTU	2 3/16	**71.4**	**34.9**	**36.5**	**55.6**	**27.0**	**69.8**	**119.9**	**101.6**	**34.9**	**63.5** 2	**19.0**	**31.8**	**69.1**	**101.6**	**129.4**	**149.2**	GRA203RRB	S1203K		**5.784**
VTU	**55**	2 13/16	1 3/8	1 7/16	2 3/16	1 1/16	2 3/4	4 23/32	4	1 3/8	1/2	3/4	1 1/4	2 23/32	4	5 3/32	5 7/8	GRAE55RRB	SE55K		12.73

TTU INDUSTRIAL SERIES

- These units are used where shaft adjustment and belt-tightening devices are required (e.g., in conveyor belt applications).
- The unit incorporates self-aligning, B-type, extra wide-inner-ring ball bearings with self-locking collars.
- The unit uses a G-KPPB (tri-ply) type wide inner ring ball bearing.
- The unit provides compact, efficient supports for adjustable shafts and conveyor take-up pulleys.
- The units are factory-prelubricated. A grease fitting is provided for relubrication if required.
- Contact your Timken engineer to discuss highly corrosive applications (e.g., food processing, chemical exposure) where Timken thin-dense chrome-coated bearings can be utilized.

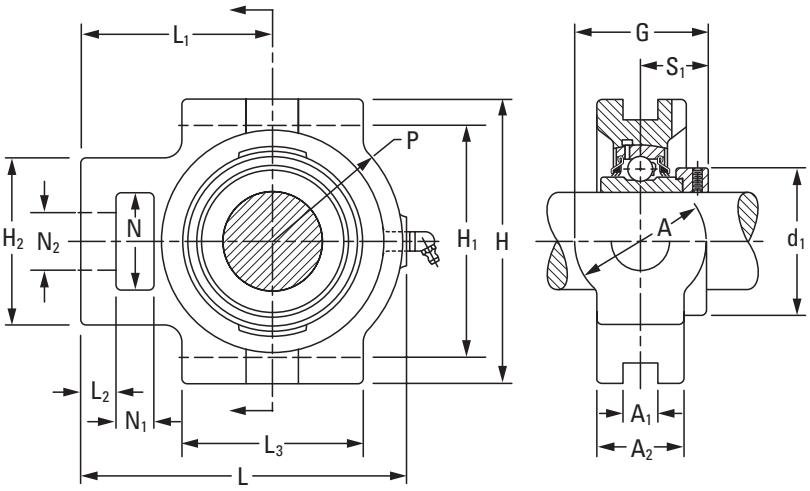

Suggested shaft tolerances:

2 in. – 2 3/16 in., nominal to -0.025 mm, -0.0010 in.

To order, specify UNIT and SHAFT DIAMETER.

Example: TTU 3/4 in.

BEARING DATA

Unit	Bearing No.	Dimensions and Load Ratings
TTU	G-KPPB	Page A-39

Unit	Shaft Dia.	G	L	S_1	d_1	A_2	A_1	A	L_1	H_2	N	N_2	L_2	N_1	P	L_3	H_1	H	Bearing No.	Housing No.
	in. **mm**	**mm** in.	**mm** in.	**mm** in.	**mm** in.	**mm** in.	**mm** in.	**mm** in.	**mm** in.	**mm** in.	**mm** in.	**mm** in.	**mm** in.	**mm** in.	**mm** in.	**mm** in.	**mm** in.	**mm** in.		
TTU	1 1/4 1 5/16 1 3/8 1 7/16	**54.38** 2.141	**125.41** 4 15/16	**32.31** 1.272	**53.98** 2.125	**36.51** 1 7/16	**13.49** 17/32	**44.45** 1 3/4	**74.61** 2 15/16	**63.50** 2 1/2	**36.51** 1 7/16	**22.23** 0.875	**12.70** 1/2	**15.88** 5/8	**49.21** 1 15/16	**69.85** 2 3/4	**88.90** 3 1/2	**104.78** 4 1/8	G1104KPPB2 G1105KPPB2 G1106KPPB2 G1107KPPB2	T18692
TTU	1 15/16	**70.64** 2.781	**152.80** 6 1/64	**38.07** 1.499	**69.34** 2.73	**49.21** 1 15/16	**17.46** 11/16	**65.09** 2 9/16	**91.28** 3 19/32	**82.55** 3 1/4	**49.21** 1 15/16	**28.58** 1.125	**15.88** 5/8	**19.05** 3/4	**59.53** 2 11/32	**85.73** 3 3/8	**100.81** 3 31/32	**120.65** 4 3/4	G1115KPPB3	T18690
TTU	2 2 1/16 2 1/8 2 3/16 **55**	**79** 3.109	**190.5** 7 1/2	**43.6** 1.716	**75.7** 2.980	**55.6** 2 3/16	**27** 1 1/16	**69.8** 2 3/4	**119.9** 4 23/32	**101.6** 4	**63.5** 2 1/2	**34.7** 1.365	**19** 3/4	**31.8** 1 1/4	**69.1** 2 23/32	**101.6** 4	**129.4** 5 3/32	**149.2** 5 7/8	G1200KPPB4 G1201KPPB4 G1202KPPB4 G1203KPPB4 GE55KPPB4	T-18828

TIMKEN® SURVIVOR® PS SERIES

Timken® Survivor® PS series housed units have polymer housings and a 300-series stainless-steel insert to provide the highest possible corrosion resistance in the industry (fig. A-24). The engineered polymer housing unit is FDA/USDA compliant. It is specifically designed for light loads and low speeds with stainless-steel set screws.

The durable corrosion-proof polymer housing features stainless-steel crush bushings in mounting holes with stainless-steel grease fittings with a nylon cap (table A-23). It resists a broad range of acids and alkalis, as well as steam and continuous temperature up to 121° C (250° F) and brief exposure up to 160° C (320° F). Additionally, the polymer strength exceeds the static capacity of the bearing, and the housing retains proper bearing fit and resists shock loads. The flush base has no voids where bacteria could collect. Optional end covers further protect the insert bearing from direct contact with wash-down solutions and cover rotating components.

Survivor PS series units are available as:

- High-base and low-base pillow blocks.
- Two-bolt and four-bolt flanged cartridges for popular shaft sizes.

Fig. A-24. PS series.

TABLE A-23.

PS SERIES	
Component	Material
Balls	Stainless steel
Ball retainer	Nylon
Set screws	Stainless steel
Crush bushing	Stainless steel
Grease	FDA approved
Housing	**Polymer**
Grease fitting	Stainless steel
Grease-fitting cover	Nylon
Rings	**Stainless steel**
Seals	Synthetic rubber

ORDERING INFORMATION

To order complete Survivor polymer assemblies, simply replace the (current cast-iron housed-unit designations) prefix with K and add the PS suffix.

Example: **KCJT 1 PS or KAK ¾ PS**

PS Survivor inserts can be ordered using the part numbers shown in the following tables.

Example: **KCJT1PS100RRB or KAK3/4PS012RRB**

PS

KAK/S SERIES

- The 300-series stainless-steel insert provides the highest resistance to corrosion in the industry.
- This unit is used for the ready-to-eat portion of the process. Loads are lighter and corrosion protection is the primary concern.
- Specifically designed for light loads and low speeds, and has stainless-steel set screws.
- The durable, corrosion-proof polymer housing has stainless-steel crush bushings in the mounting holes and a stainless-steel grease fitting with nylon cap.
- Polymer resists a broad range of acids and alkalis, as well as steam and continuous temperature up to 121° C (250° F) and brief exposure up to 160° C (320° F).
- The polymer strength exceeds static capacity of bearing; housing retains proper bearing fit and resists shock loads.
- The flush base contains no voids where bacteria can collect.
- The optional end covers further protect insert bearing from direct contact with washdown solutions and cover rotating components.

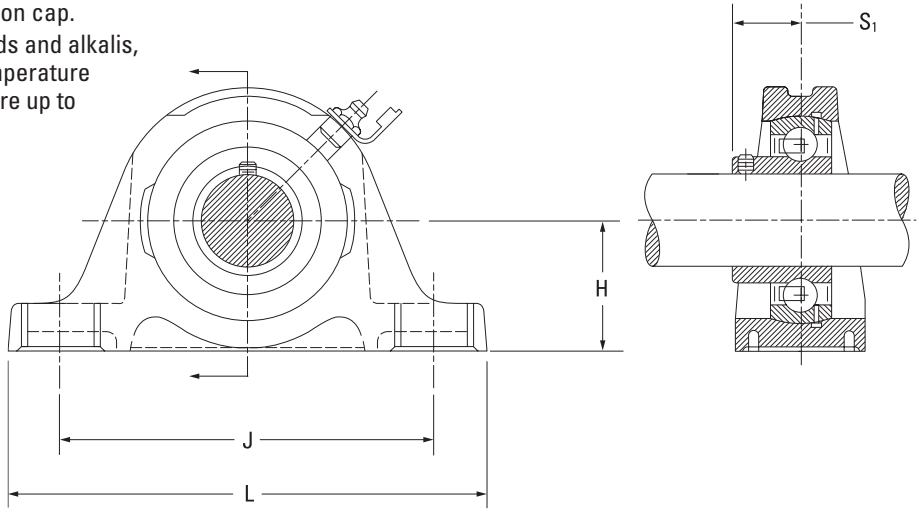

Unit[1]	Shaft Dia.	Type	KAK H	KAS H	J	L	S_1	Static Load Rating	Limiting Speed	Bearing No.
	in. **mm**		**mm** in.	**mm** in.	**mm** in.	**mm** in.	**mm** in.	**N** lbs.	RPM	
KAK/S	3/4 **20**	PS	**31.75** 1 1/4	**33.34** 1 15/16	**96.04** 3 25/32	**127.00** 5	**18.26** 23/32	**900** 200	500	GKY012RRB GKYE20RRB
KAK/S	1 **25**	PS	**33.34** 1 5/16	**36.51** 1 7/16	**104.78** 4 1/8	**139.70** 5 1/2	**20.64** 13/16	**1100** 240	425	GKY100RRB GKYE25RRB
KAK/S	1 3/16 1 1/4 S **30**	PS	**39.69** 1 9/16	**42.86** 1 11/16	**117.48** 4 5/8	**157.16** 6 3/16	**22.23** 7/8	**1600** 350	375	GKY103RRB GKY103RRB2 GKYE30RRB
KAK/S	1 1/4 1 7/16 **35**	PS	**46.04** 1 13/16	**47.63** 1 7/8	**130.18** 5 1/8	**166.69** 6 9/16	**27.38** 1 5/64	**2100** 475	300	GKY104RRB GKY107RRB GKYE35RRB

[1]Option of low-base KAK or high-base KAS.

KCJ SERIES

- The 300-series stainless-steel insert provides the highest resistance to corrosion in the industry.
- This unit is used for the ready-to-eat portion of the process. Loads are lighter and corrosion protection is the primary concern.
- Specifically designed for light loads and low speeds, and has stainless-steel set screws.
- The durable, corrosion-proof polymer housing has stainless-steel crush bushings in the mounting holes and a stainless-steel grease fitting with nylon cap.
- Polymer resists a broad range of acids and alkalis, as well as steam and continuous temperature up to 121° C (250° F) and brief exposure up to 160° C (320° F).
- The polymer strength exceeds static capacity of bearing; housing retains proper bearing fit and resists shock loads.
- The flush base contains no voids where bacteria can collect.
- The optional end covers further protect insert bearing from direct contact with washdown solutions and cover rotating components.

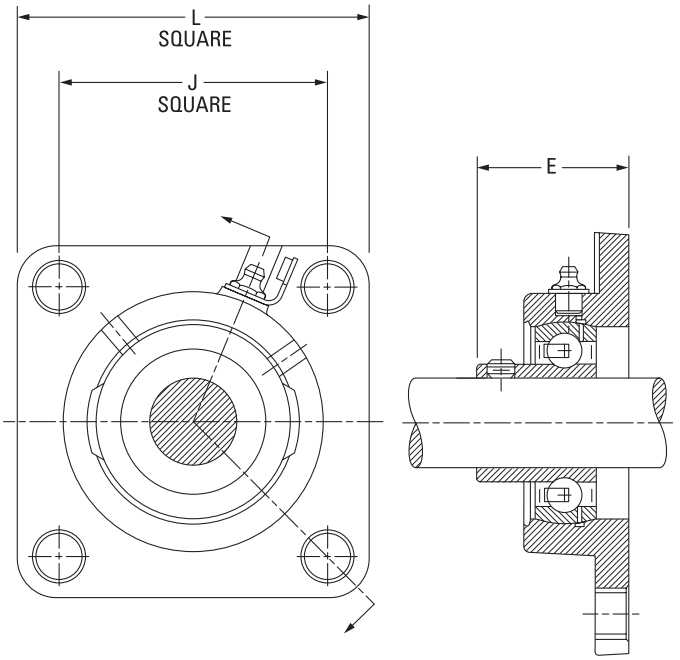

Unit	Shaft Dia.	Type	L	J	E	Static Load Rating	Limiting Speed	Bearing No.
	in. **mm**		**mm** in.	**mm** in.	**mm** in.	**N** lbs.	RPM	
KCJ	3/4 **20**	PS	**85.33** 3 23/64	**63.50** 2 1/2	**37.31** 1 15/32	**900** 200	500	GKY012RRB GKYE20RRB
KCJ	1 **25**	PS	**94.85** 3 47/64	**69.85** 2 3/4	**39.69** 1 9/16	**1100** 240	425	GKY100RRB GKYE25RRB
KCJ	1 3/16 1 1/4 S **30**	PS	**107.95** 4 1/4	**82.55** 3 1/4	**41.28** 1 5/8	**1600** 350	375	GKY103RRB GKY103RRB2 GKYE30RRB
KCJ	1 1/4 1 7/16 **35**	PS	**117.48** 4 5/8	**92.08** 3 5/8	**46.04** 1 13/16	**2100** 475	300	GKY104RRB GKY107RRB GKYE35RRB

KCJT AND KTB SERIES

- The 300-series stainless-steel insert provides the highest resistance to corrosion in the industry.
- This unit is used for the ready-to-eat portion of the process. Loads are lighter and corrosion protection is the primary concern.
- Specifically designed for light loads and low speeds, and has stainless-steel set screws.
- The durable, corrosion-proof polymer housing has stainless-steel crush bushings in the mounting holes and a stainless-steel grease fitting with nylon cap.
- Polymer resists a broad range of acids and alkalis, as well as steam and continuous temperature up to 121° C (250° F) and brief exposure up to 160° C (320° F).
- The polymer strength exceeds static capacity of bearing; housing retains proper bearing fit and resists shock loads.
- The flush base contains no voids where bacteria can collect.
- The optional end covers further protect insert bearing from direct contact with washdown solutions and cover rotating components.

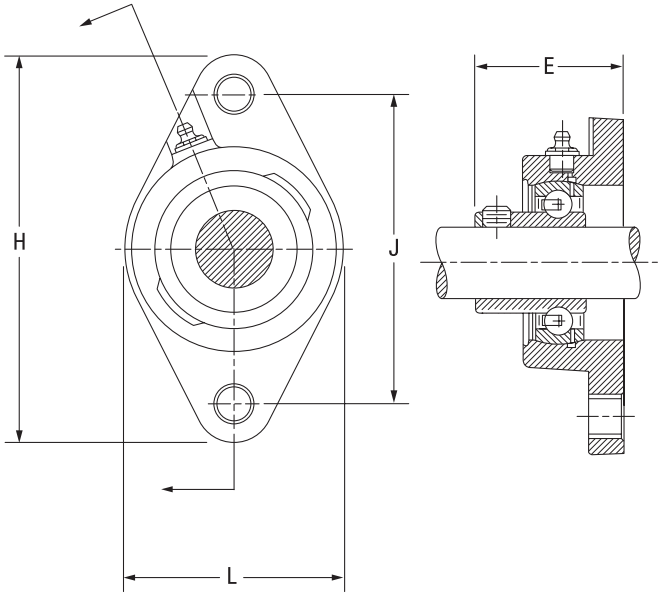

Unit	Shaft Dia.	Type	H	J	L	E	Static Load Rating	Limiting Speed	Bearing No.
	in. **mm**		**mm** in.	**mm** in.	**mm** in.	**mm** in.	**N** lbs.	RPM	
KCJT	3/4 **20**	PS	**111.92** 4 13/32	**89.69** 3 17/32	**60.33** 2 3/8	**37.31** 1 15/32	**900** 200	500	GKY012RRB GKYE20RRB
KCJT	1 **25**	PS	**124.22** 4 57/64	**98.82** 3 57/64	**65.48** 2 37/64	**39.69** 1 9/16	**1100** 240	425	GKY100RRB GKYE25RRB
KCJT	1 3/16 1 1/4 S **30**	PS	**140.89** 5 35/64	**116.68** 4 19/32	**76.20** 3	**41.28** 1 5/8	**1600** 350	375	GKY103RRB GKY103RRB2 GKYE30RRB
KCJT	1 1/4 1 7/16 **35**	PS	**155.58** 6 1/8	**130.18** 5 1/8	**92.08** 3 5/8	**49.21** 1 15/16	**2100** 475	300	GKY104RRB GKY107RRB GKYE35RRB

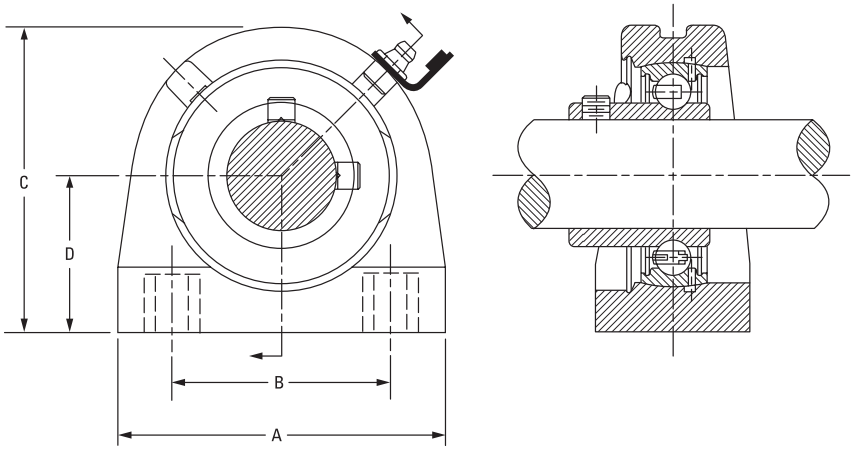

Unit	Shaft Dia.	Type	A	B	C	D	Static Load Rating	Limiting Speed	Bearing No.
	in. **mm**		**mm** in.	**mm** in.	**mm** in.	**mm** in.	**N** lbs.	RPM	
KTB	1	PS	**76.20** 3	**50.80** 2	**71.44** 2 13/16	**36.51** 1 7/16	**1100** 240	425	GKY100RRB

TIMKEN® SURVIVOR® PT SERIES

Timken® Survivor® PT series housed units are designed to meet stringent food-handling requirements while standing up to highly corrosive environments (fig. A-25). All materials used in Survivor assemblies, including grease, are approved for USDA- and FDA-compliant industries (table A-24).

The Survivor series also provides extraordinary corrosion resistance for materials handling operations, dairy and refrigeration applications, as well as heating, ventilation and air conditioning (HVAC), chemical, maritime and other highly corrosive environments.

Patented Survivor PT polymer housed units withstand a wide range of chemicals. These units are dimensionally stable under load and able to operate in continuous temperatures up to 120° C (250° F) and brief exposures up to 177° C (350° F).

Our bearing inserts are coated in proprietary Timken thin-dense chrome that will not crack or peel. Inserts are available with a self-locking collar or a set screw locking device. Also available is Timken Shaft Guarding Technology (page A-31), which uses a stainless-steel, hardened band to transfer gripping pressure on the shaft. Unlike traditional set screws, which can dig into the shaft, there are no nicks, raised metal or permanent shaft damage. The stainless band won't corrode on the shaft. Housed units with Shaft Guarding Technology also reduce change-out time.

Survivor PT series units are available as:

- High-base and low-base pillow blocks.
- Two-bolt and four-bolt flanged cartridges for popular shaft sizes of ½ in. through 2 15⁄16 in. (and selected metric diameters).
- Take-up unit in the Survivor PT series in limited shaft sizes (RTU-NT). The bearing inserts are available with self-locking collars.

Timken also produces a take-up unit in the Survivor NT series in limited shaft sizes (RTU-NT). The bearing inserts are available with self-locking collars.

Survivor PT assemblies are dimensionally interchangeable with the current line of Timken cast-iron housed units.

The polymer housing and TDC coating resist premature failure under corrosive conditions. These properties extend the life of the housed unit and bearing. Longer periods between replacements save costs and reduce downtime.

Fig. A-25. Popular styles.

TABLE A-24.

PT SERIES	
Component	Material
Balls	Stainless steel
Ball retainer	Nylon
Collar	Stainless steel
Crush bushing	Stainless steel
Grease	FDA approved
Housing	**Polymer**
Grease fitting	Stainless steel
Grease fitting cover	Nylon
Rings	**TDC plated**
Seals	Synthetic rubber
Seal caps	Stainless steel
Set screw	Stainless steel

ORDERING INFORMATION

To order complete Survivor polymer assemblies, simply add the PT suffix to the current cast-iron housed-unit designations.

Example: **YCJT 1 PT SGT or RAK ¾ PT SGT**

Survivor inserts can be ordered using Timken's standard part number for wide-inner-ring ball bearings with a TDCF suffix.

Example: **GY1100KRRB TDCF SGT or G1100KRRB + COL TDCF SGT**

PT
YAK/S SERIES

- This unit is used for the main portion of the process where loads are lighter and corrosion protection is important.
- Durable corrosion-proof polymer housing with stainless-steel crush bushings in mounting holes and a stainless-steel grease fitting with a nylon cap.
- Polymer resists a broad range of acids and alkalis, as well as steam and continuous temperature up to 121° C (250° F), and brief exposure up to 160° C (320° F).
- The polymer strength exceeds static capacity of bearing; housing retains proper bearing fit and resists shock loads.
- The flush base contains no voids where bacteria can collect.
- Corrosion-resistant insert bearing with stainless-steel balls and a nylon retainer. The PT series also features industrial-duty contact seals with stainless-steel shroud caps.
- This unit has stainless-steel set screws with Shaft Guarding Technology.
- This unit is factory lubricated with FDA/USDA-approved grease (class H1 lubricant) for incidental food contact.

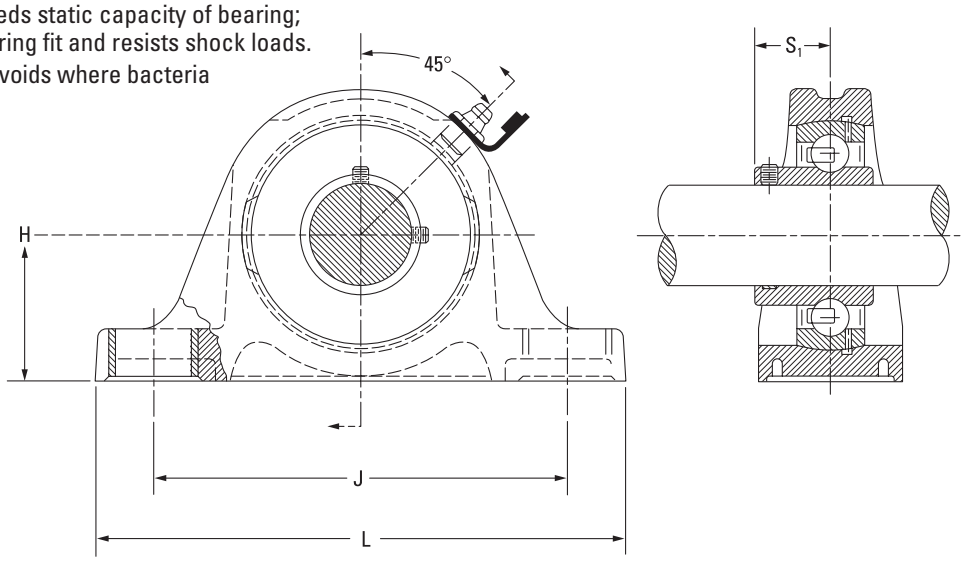

Unit[1]	Shaft Dia.	Type	YAK H	YAS H	J	L	S_1	Static Load Rating	Dynamic Load Rating	Speed Rating	Bearing No.	
	in. **mm**		**mm** in.	**mm** in.	**mm** in.	**mm** in.	**mm** in.	**N** lbs.	**N** lbs.	RPM		
YAK/S	3/4 **20**	PT SGT	**31.75** 1 1/4	**33.34** 1 5/16	**96.04** 3 25/32	**127.00** 5	**19.05** 3/4	**6500** 1460	**14500** 3250	9200 8800	GY1012KRRB GYE20KRRB	TDCF SGT TDCF SGT
YAK/S	1 **25**	PT SGT	**33.34** 1 5/16	**36.51** 1 7/16	**104.78** 4 1/8	**139.70** 5 1/2	**20.64** 13/16	**7700** 1730	**15800** 3550	6900 7000	GY1100KRRB GYE25KRRB	TDCF SGT TDCF SGT
YAK/S	1 1/4S **30**	PT PT SGT	**39.69** 1 9/16	**42.86** 1 11/16	**117.48** 4 5/8	**157.16** 6 3/16	**23.4** 59/64	**11100** 2500	**21800** 4900	5500 5800	GY1103KRRB3 GYE30KRRB	TDCF TDCF SGT
YAK/S	1 3/8 1 7/16 **35**	PT SGT	**46.04** 1 13/16	**47.63** 1 7/8	**130.18** 5 1/8	**166.69** 6 9/16	**28.18** 1 7/64	**15100** 3400	**28500** 6400	5000 4800 5000	GY1106KRRB GY1107KRRB GYE35KRRB	TDCF SGT TDCF SGT TDCF SGT
YAK/S	1 1/2 **40**	PT SGT	**49.21** 1 15/16	**49.21** 1 15/16	**136.53** 5 3/8	**179.39** 7 1/16	**30.16** 1 3/16	**19600** 4400	**36300** 8150	4600 4400	GY1108KRRB GYE40KRRB	TDCF SGT TDCF SGT

[1]Option of low-base RAK or high-base RAS.

YCJ SERIES

- This unit is used for the main portion of the process where loads are lighter and corrosion protection is important.
- Durable corrosion-proof polymer housing with stainless-steel crush bushings in mounting holes and a stainless-steel grease fitting with a nylon cap.
- Polymer resists a broad range of acids and alkalis, as well as steam and continuous temperature up to 121° C (250° F), and brief exposure up to 160° C (320° F).
- The polymer strength exceeds static capacity of bearing; housing retains proper bearing fit and resists shock loads.
- The flush base contains no voids where bacteria can collect.
- Corrosion-resistant insert bearing with stainless-steel balls and a nylon retainer. The PT series also features industrial-duty contact seals with stainless-steel shroud caps.
- This unit has stainless-steel set screws with Shaft Guarding Technology.
- This unit is factory lubricated with FDA/USDA-approved grease (class H1 lubricant) for incidental food contact.

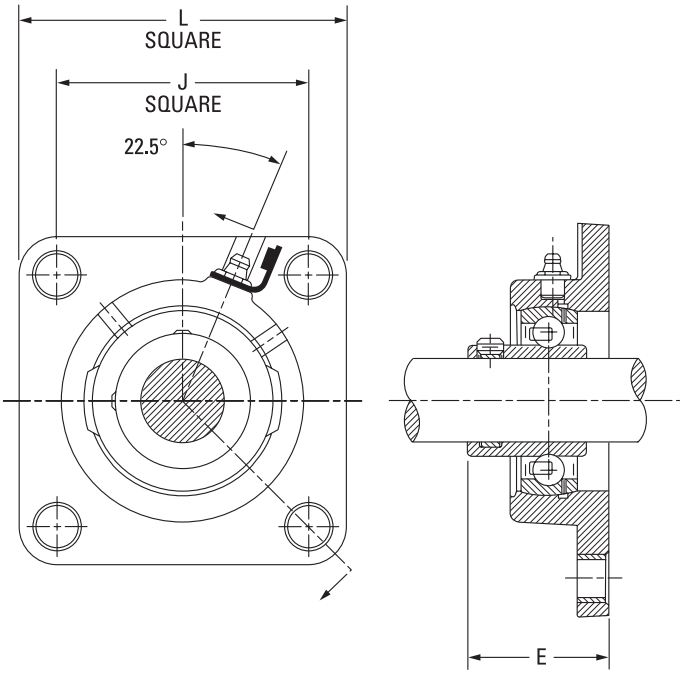

Unit	Shaft Dia.	Type	L	J	E	Static Load Rating	Dynamic Load Rating	Speed Rating	Bearing No.	
	in. **mm**		**mm** in.	**mm** in.	**mm** in.	**N** lbs.	**N** lbs.	RPM		
YCJ	3/4 **20**	PT SGT	**85.73** 3 3/8	**63.50** 2 1/2	**38.10** 1 1/2	**6500** 1460	**14500** 3250	9200 8800	GY1012KRRB GYE20KRRB	TDCF SGT TDCF SGT
YCJ	1 **25**	PT SGT	**95.25** 3 3/4	**69.85** 2 49/64	**39.69** 1 9/16	**7700** 1730	**15800** 3550	6900 7000	GY1100KRRB GYE25KRRB	TDCF SGT TDCF SGT
YCJ	1 3/16 1 1/4S **30**	PT SGT PT PT SGT	**107.95** 4 1/4	**82.55** 3 1/4	**42.07** 1 21/32	**11100** 2500	**21800** 4900	5800 5500 5800	GY1103KRRB GY1103KRRB3 GYE30KRRB	TDCF SGT TDCF TDCF SGT
YCJ	1 1/4 1 3/8 1 7/16 **35**	PT SGT	**117.48** 4 5/8	**92.08** 3 5/8	**48.42** 1 29/32	**15100** 3400	**28500** 6400	5500 5000 4800 5000	GY1104KRRB GY1106KRRB GY1107KRRB GYE35KRRB	TDCF SGT TDCF SGT TDCF SGT TDCF SGT
YCJ	1 1/2 **40**	PT SGT	**130.18** 5 1/8	**101.60** 4	**53.98** 2 1/8	**19600** 4400	**36300** 8150	4600 4400	GY1108KRRB GYE40KRRB	TDCF SGT TDCF SGT

YCJT SERIES

- This unit is used for the main portion of the process where loads are lighter and corrosion protection is important.
- Durable corrosion-proof polymer housing with stainless-steel crush bushings in mounting holes and a stainless-steel grease fitting with a nylon cap.
- Polymer resists a broad range of acids and alkalis, as well as steam and continuous temperature up to 121° C (250° F), and brief exposure up to 160° C (320° F).
- The polymer strength exceeds static capacity of bearing; housing retains proper bearing fit and resists shock loads.
- The flush base contains no voids where bacteria can collect.
- Corrosion-resistant insert bearing with stainless-steel balls and a nylon retainer. The PT series also features industrial-duty contact seals with stainless-steel shroud caps.
- This unit has stainless-steel set screws with Shaft Guarding Technology.
- This unit is factory lubricated with FDA/USDA-approved grease (class H1 lubricant) for incidental food contact.

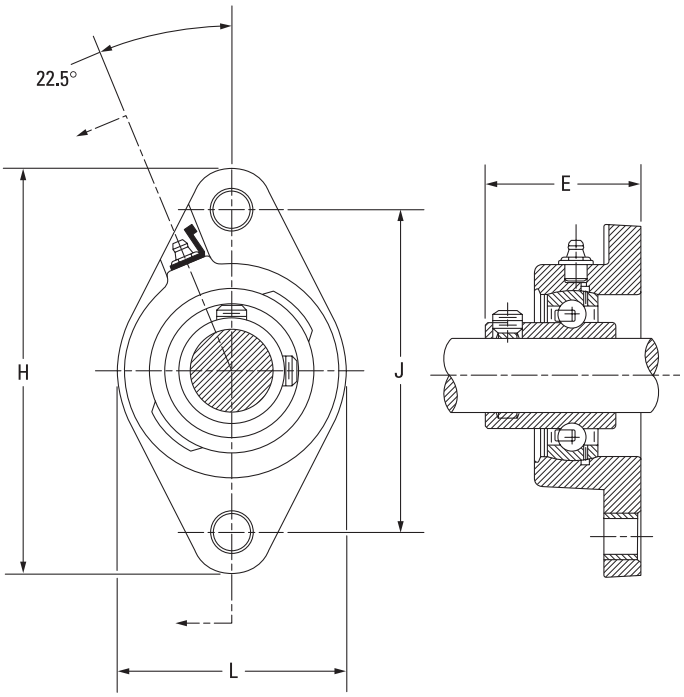

Unit	Shaft Dia.	Type	H	J	L	E	Static Load Rating	Dynamic Load Rating	Speed Rating	Bearing No.	
	in. **mm**		**mm** in.	**mm** in.	**mm** in.	**mm** in.	**N** lbs.	**N** lbs.	RPM		
YCJT	3/4 **20**	PT SGT	**111.92** 4 13/32	**89.69** 3 17/32	**60.33** 2 3/8	**38.10** 1 1/2	**6500** 1460	**14500** 3250	9200 8800	GY1012KRRB GYE20KRRB	TDCF SGT TDCF SGT
YCJT	1 **25**	PT SGT	**123.83** 4 7/8	**99.22** 3 29/32	**69.85** 2 3/4	**39.69** 1 9/16	**7700** 1730	**15800** 3550	6900 7000	GY1100KRRB GYE25KRRB	TDCF SGT TDCF SGT
YCJT	1 3/16 1 1/4S **30**	PT SGT PT PT SGT	**141.29** 5 9/16	**116.68** 4 19/32	**79.38** 3 1/8	**42.07** 1 21/32	**11100** 2500	**21800** 4900	5800 5500 5800	GY1103KRRB GY1103KRRB3 GYE30KRRB	TDCF SGT TDCF TDCF SGT
YCJT	1 1/4 1 3/8 1 7/16 **35**	PT SGT	**155.58** 6 1/8	**130.18** 5 1/8	**92.08** 3 5/8	**48.42** 1 29/32	**15100** 3400	**28500** 6400	5500 5000 4800 5000	GY1104KRRB GY1106KRRB GY1107KRRB GYE35KRRB	TDCF SGT TDCF SGT TDCF SGT TDCF SGT
YCJT	1 1/2 **40**	PT SGT	**171.45** 6 3/4	**143.67** 5 21/32	**104.78** 4 1/8	**53.98** 2 1/8	**19600** 4400	**36300** 8150	4600 4400	GY1108KRRB GYE40KRRB	TDCF SGT TDCF SGT

YTB AND YFB SERIES

- This unit is used for the main portion of the process where loads are lighter and corrosion protection is important.
- Durable corrosion-proof polymer housing with stainless-steel crush bushings in mounting holes and a stainless-steel grease fitting with a nylon cap.
- Polymer resists a broad range of acids and alkalis, as well as steam and continuous temperature up to 121° C (250° F), and brief exposure up to 160° C (320° F).
- The polymer strength exceeds static capacity of bearing; housing retains proper bearing fit and resists shock loads.
- The flush base contains no voids where bacteria can collect.
- Corrosion-resistant insert bearing with stainless-steel balls and a nylon retainer. The PT series also features industrial-duty contact seals with stainless-steel shroud caps.
- This unit has stainless-steel set screws with Shaft Guarding Technology.
- This unit is factory lubricated with FDA/USDA-approved grease (class H1 lubricant) for incidental food contact.

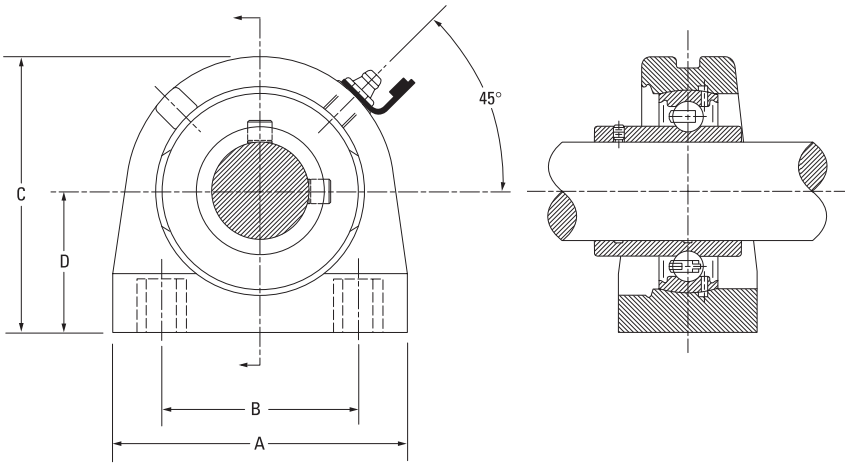

Unit	Shaft Dia.	Type	A	B	C	D	Static Load Rating	Dynamic Load Rating	Speed Rating	Bearing No.	
	in. **mm**		**mm** in.	**mm** in.	**mm** in.	**mm** in.	**N** lbs.	**N** lbs.	RPM		
YTB	1 **25**	PT SGT	**76.20** 3	**50.80** 2	**71.44** 2 13/16	**36.51** 1 7/16	**7700** 1730	**15800** 3550	6900 7000	GY1100KRRB GYE25KRRB	TDCF SGT TDCF SGT

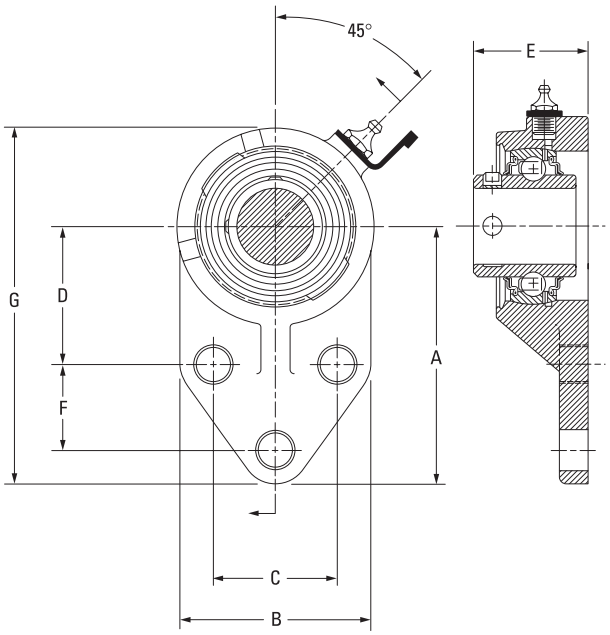

Unit	Shaft Dia.	Type	A	B	C	D	E	F	G	Static Load Rating	Dynamic Load Rating	Speed Rating	Bearing No.	
	in. **mm**		**mm** in.	**mm** in.	**mm** in.	**mm** in.	**mm** in.	**mm** in.	**mm** in.	**N** lbs.	**N** lbs.	RPM		
YFB	1 **25**	PT SGT	**85.73** 3 3/8	**63.50** 2 1/2	**41.28** 1 5/8	**46.04** 1 13/16	**38.10** 1 1/2	**28.58** 1 1/8	**118.66** 4 43/64	**6900** 1560	**15300** 3450	6900 7000	GY1100KRRB GYE25KRRB	TDCF SGT TDCF SGT

RAK/S SERIES

- This unit is used for the main portion of the process where loads are lighter and corrosion protection is important.
- Durable corrosion-proof polymer housing with stainless-steel crush bushings in mounting holes and a stainless-steel grease fitting with a nylon cap.
- Polymer resists a broad range of acids and alkalis, as well as steam and continuous temperature up to 121° C (250° F), and brief exposure up to 160° C (320° F).
- The polymer strength exceeds static capacity of bearing; housing retains proper bearing fit and resists shock loads.
- The flush base contains no voids where bacteria can collect.
- Corrosion-resistant insert bearing with stainless-steel balls and a nylon retainer. The PT series also features industrial-duty contact seals with stainless-steel shroud caps.
- This unit has a stainless-steel lock collar.
- This unit is factory lubricated with FDA/USDA-approved grease (class H1 lubricant) for incidental food contact.

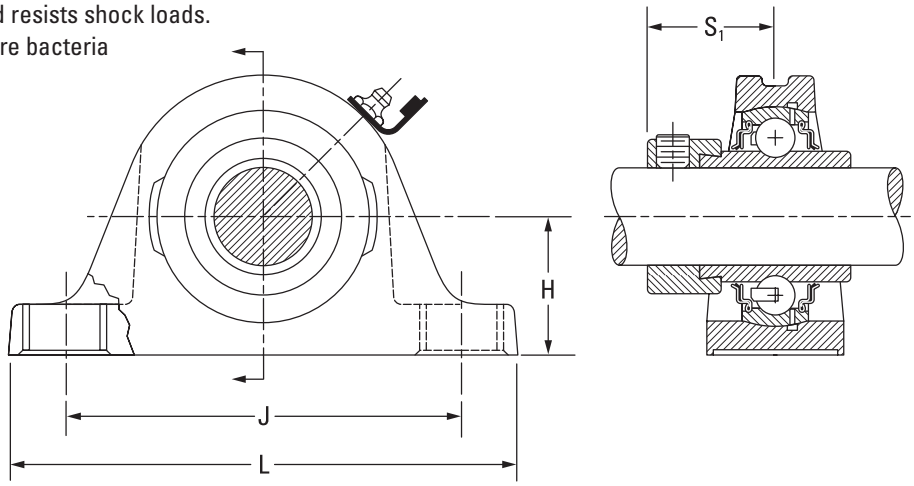

Unit[1]	Shaft Dia.	Type	RAK H	RAS H	J	L	S_1	Static Load Rating	Dynamic Load Rating	Speed Rating	Bearing No.		Collar No.
	in. **mm**		**mm** in.	**mm** in.	**mm** in.	**mm** in.	**mm** in.	**N** lbs.	**N** lbs.	RPM			
RAK/S	¾	PT	**31.75** 1 1/4	**33.34** 1 5/16	**96.04** 3 25/32	**127.00** 5	**26.59** 1 3/64	**6500** 1460	**14500** 3250	9200	G1012KRRB	TDCF	S1012K SS
RAK/S	1 **25**	PT	**33.34** 1 5/16	**36.51** 1 7/16	**104.78** 4 1/8	**139.70** 5 1/2	**26.99** 1 1/16	**7700** 1730	**15800** 3550	6900 7000	G1100KRRB GE25KRRB	TDCF TDCF	S1100K SS SE25K SS
RAK/S	1 3/16 1 1/4S **30**	PT	**39.69** 1 9/16	**42.86** 1 11/16	**117.48** 4 5/8	**157.16** 6 3/16	**30.16** 1 3/16	**11100** 2500	**21800** 4900	5800 5500 5800	G1103KRRB G1103KRRB3 GE30KRRB	TDCF TDCF TDCF	S1103K SS S1103K3 SS SE30K SS
RAK/S	1 1/4 1 3/8 1 7/16	PT	**46.04** 1 13/16	**47.63** 1 7/8	**130.18** 5 1/8	**166.69** 6 9/16	**32.54** 1 9/32	**15100** 3400	**28500** 6400	5500 5000 4800	G1104KRRB G1106KRRB G1107KRRB	TDCF TDCF TDCF	S1104K SS S1106K SS S1107K SS
RAK/S	1 1/2 **40**	PT	**49.21** 1 15/16	**49.21** 1 15/16	**136.53** 5 3/8	**179.39** 7 1/16	**34.93** 1 3/8	**19600** 4400	**36300** 8150	4600 4400	G1108KRRB GE40KRRB	TDCF TDCF	S1108KT SS SE40K SS

[1]Option of low-base RAK or high-base RAS.

RCJ SERIES

- This unit is used for the main portion of the process where loads are lighter and corrosion protection is important.
- Durable corrosion-proof polymer housing with stainless-steel crush bushings in mounting holes and a stainless-steel grease fitting with a nylon cap.
- Polymer resists a broad range of acids and alkalis, as well as steam and continuous temperature up to 121° C (250° F), and brief exposure up to 160° C (320° F).
- The polymer strength exceeds static capacity of bearing; housing retains proper bearing fit and resists shock loads.
- The flush base contains no voids where bacteria can collect.
- Corrosion-resistant insert bearing with stainless-steel balls and a nylon retainer. The PT series also features industrial-duty contact seals with stainless-steel shroud caps.
- This unit has a stainless-steel lock collar.
- This unit is factory lubricated with FDA/USDA-approved grease (class H1 lubricant) for incidental food contact.

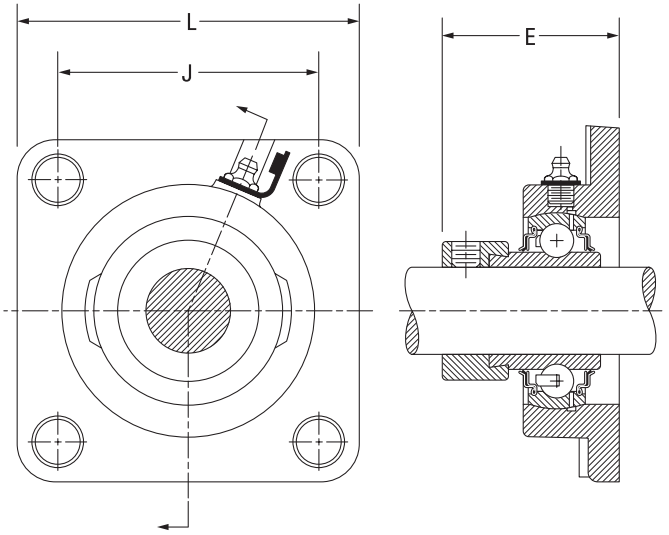

Unit	Shaft Dia.	Type	L	J	E	Static Load Rating	Dynamic Load Rating	Speed Rating	Bearing No.		Collar No.
	in. **mm**		**mm** in.	**mm** in.	**mm** in.	**N** lbs.	**N** lbs.	RPM			
RCJ	¾	PT	**85.73** 3 3/8	**63.50** 2 1/2	**43.26** 1 45/64	**6500** 1460	**14500** 3250	9200	G1012KRRB	TDCF	S1012K SS
RCJ	1 **25**	PT	**95.25** 3 3/4	**69.85** 2 3/4	**46.04** 1 13/16	**7700** 1730	**15800** 3550	6900 7000	G1100KRRB GE25KRRB	TDCF TDCF	S1100K SS SE25K SS
RCJ	1 3/16 1 1/4S **30**	PT	**107.95** 4 1/4	**82.55** 3 1/4	**49.21** 1 15/16	**11100** 2500	**21800** 4900	5800 5500 5800	G1103KRRB G1103KRRB3 GE30KRRB	TDCF TDCF TDCF	S1103K SS S1103K3 SS SE30K SS
RCJ	1 1/4 1 3/8 1 7/16	PT	**117.48** 4 5/8	**92.08** 3 5/8	**52.78** 2 5/64	**15100** 3400	**28500** 6400	5500 5000 4800	G1104KRRB G1106KRRB G1107KRRB	TDCF TDCF TDCF	S1104K SS S1106K SS S1107K SS
RCJ	1 1/2 **40**	PT	**130.18** 5 1/8	**101.60** 4	**58.74** 2 5/16	**19600** 4400	**36300** 8150	4600 4400	G1108KRRB GE40KRRB	TDCF TDCF	S1108KT SS SE40K SS

RCJT AND RTB SERIES

- This unit is used for the main portion of the process where loads are lighter and corrosion protection is important.
- Durable corrosion-proof polymer housing with stainless steel crush bushings in mounting holes and a stainless-steel grease fitting with a nylon cap.
- Polymer resists a broad range of acids and alkalis, as well as steam and continuous temperature up to 121° C (250° F), and brief exposure up to 160° C (320° F).
- The polymer strength exceeds static capacity of bearing; housing retains proper bearing fit and resists shock loads.
- The flush base contains no voids where bacteria can collect.
- Corrosion-resistant insert bearing with stainless-steel balls and a nylon retainer. The PT series also features industrial-duty contact seals with stainless-steel shroud caps.
- This unit has a stainless-steel lock collar.
- This unit is factory lubricated with FDA/USDA-approved grease (class H1 lubricant) for incidental food contact.

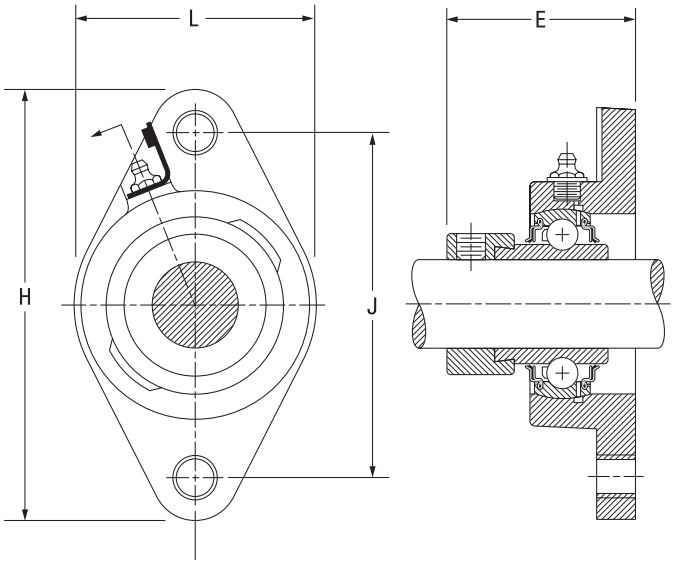

Unit	Shaft Dia.	Type	H	J	L	E	Static Load Rating	Dynamic Load Rating	Speed Rating	Bearing No.		Collar No.
	in. **mm**		**mm** in.	**mm** in.	**mm** in.	**mm** in.	**N** lbs.	**N** lbs.	RPM			
RCJT	3/4	PT	**111.92** 4 13/32	**89.69** 3 17/32	**60.5** 2 3/8	**45.24** 1 25/32	**6500** 1460	**14500** 3250	9200	G1012KRRB	TDCF	S1012K SS
RCJT	1 **25**	PT	**123.83** 4 7/8	**99.22** 3 29/32	**69.85** 2 3/4	**46.04** 1 13/16	**7700** 1730	**15800** 3550	6900 7000	G1100KRRB GE25KRRB	TDCF TDCF	S1100K SS SE25K SS
RCJT	1 3/16 1 1/4S **30**	PT	**141.29** 5 9/16	**116.68** 4 19/32	**79.38** 3 1/8	**49.21** 1 15/16	**11100** 2500	**21800** 4900	5800 5500 5800	G1103KRRB G1103KRRB3 GE30KRRB	TDCF TDCF TDCF	S1103K SS S1103K3 SS SE30K SS
RCJT	1 1/4 1 3/8 1 7/16	PT	**155.58** 6 1/8	**130.18** 5 1/8	**92.08** 3 5/8	**52.78** 2 5/64	**15100** 3400	**28500** 6400	5000 4800 5500	G1104KRRB G1106KRRB G1107KRRB	TDCF TDCF TDCF	S1104K SS S1106K SS S1107K SS
RCJT	1 1/2 **40**	PT	**171.45** 6 3/4	**143.67** 5 21/32	**104.78** 4 1/8	**58.74** 2 5/16	**19600** 4400	**36300** 8150	4600 4400	G1108KRRB GE40KRRB	TDCF TDCF	S1108KT SS SE40K SS

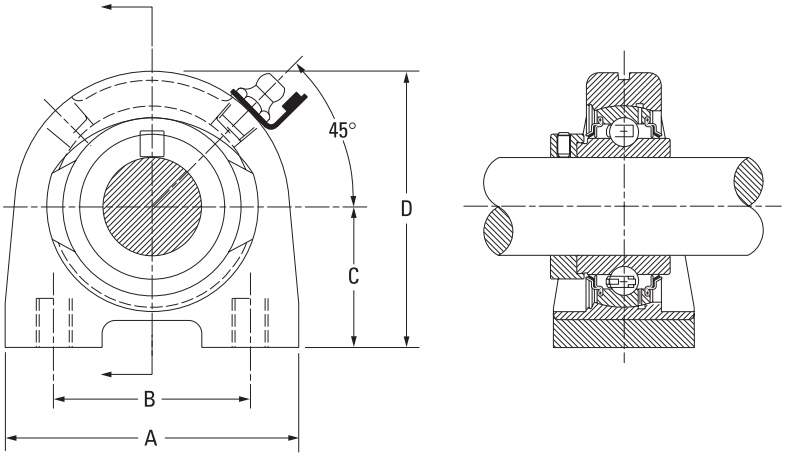

Unit	Shaft Dia.	Type	A	B	C	D	Static Load Rating	Dynamic Load Rating	Limiting Speed	Bearing No.		Collar No.
	in.		**mm** in.	**mm** in.	**mm** in.	**mm** in.	**N** lbs.	**N** lbs.	RPM			
RTB	1	PT	**76.20** 3	**50.80** 2	**36.51** 1 7/16	**71.44** 2 13/16	**7700** 1730	**15300** 3450	6900	G1100KRRB	TDCF	S1100K SS

TIMKEN® SURVIVOR® NT SERIES

Timken® Survivor® NT series housed units offer superior corrosion resistance and durability for food and beverage industries, materials-handling operations, dairy and refrigeration applications, as well as HVAC, chemical, maritime and other highly corrosive environments (fig. A-26). All materials used in the Survivor assemblies, including the grease, are approved for USDA- and FDA-compliant industries (table A-25). The solid base is designed so food particles easily wash out.

Bearing inserts are coated in proprietary Timken thin-dense chrome that will not crack or peel. Combined with stainless-steel locking collars, these offer superior corrosion protection. The robust block option features an electroless nickel-plated housing.

Survivor NT series units are available as:

- High-base and low-base pillow blocks.
- Two-bolt and four-bolt flanged cartridges for popular shaft sizes of ½ in. through 2 15⁄16 in. (and select metric diameters).
- Take-up unit in the Survivor NT series in limited shaft sizes (RTU-NT). The bearing inserts are available with self-locking collars.

The Survivor NT series is dimensionally interchangeable with the current line of Timken cast-iron housed units.

Our bearing inserts are coated in proprietary Timken thin-dense chrome that will not crack or peel. Inserts are available with a self-locking collar or a set screw locking device. Also available is Timken Shaft Guarding Technology (page A-31), which uses a stainless-steel hardened band to transfer gripping pressure on the shaft. Unlike traditional set screws, which can dig into the shaft, there are no nicks, raised metal or permanent shaft damage. The stainless band won't corrode on the shaft. Housed units with Shaft Guarding Technology also reduce change-out time.

Fig. A-26. Popular styles.

TABLE A-25.

NT SERIES	
Component	Material
Balls	Stainless steel
Ball retainer	Nylon
Collar	Stainless steel
Rings	TDC plated
Grease	FDA approved
Housing finish	**Nickel plating**
Grease fitting	Stainless steel
Grease-fitting cover	Nylon
Seals	Synthetic rubber
Seal caps	Stainless steel
Set screw[1]	Stainless steel

[1]Standard Survivor® NT units are only available in the R-series self-locking collar types. Set screw lock series (Y) units are available for minimum quantity orders.

ORDERING INFORMATION

To order complete Survivor nickel-plated assemblies, simply add the NT suffix to the cast-iron housed-unit designations.

Example: **RCJT 1 NT or RAK ¾ NT**

Survivor inserts can be ordered using Timken's standard part number for wide-inner-ring ball bearings with a TDCF suffix.

Example: **G1100KRRB + COL TDCF**

NT

YCJ AND YCJT SERIES

- This unit has the largest variety of configurations and shaft sizes and is used for the heaviest loads at the beginning of processing.
- Corrosion-resistant housing that is electroless nickel-plated and has a stainless-steel grease fitting. The protective cap withstands corrosion and prevents contamination.
- The corrosion-resistant insert bearing has stainless-steel balls with a nylon retainer. It also has industrial-duty contact seals with stainless-steel shroud caps.
- This unit has stainless-steel set screws with Shaft Guarding Technology.
- The unit is factory lubricated with FDA/USDA-approved grease (class H1 lubricant) for incidental food contact.

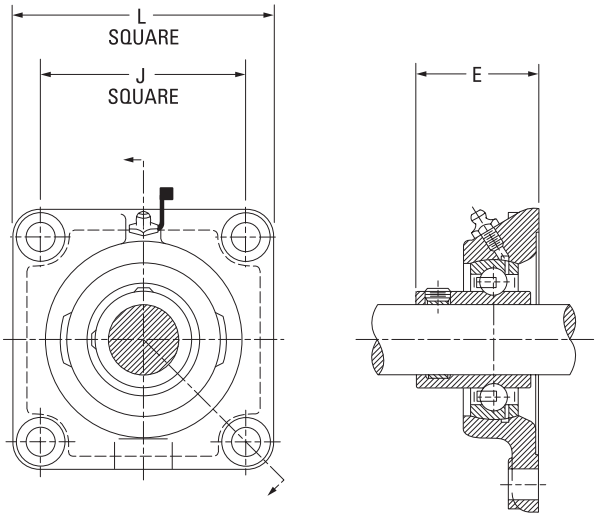

Unit	Shaft Dia.	Type	L	J	E	Static Load Rating	Dynamic Load Rating	Speed Rating	Bearing No.
	in. **mm**		**mm** in.	**mm** in.	**mm** in.	**N** lbs.	**N** lbs.	RPM	
YCJ	1 **25**	NT SGT	**95.25** 3 3/4	**70.25** 2 49/64	**40.08** 1 37/64	**7700** 1730	**15800** 3550	6900 7000	GY1100KRRB TDCF SGT GYE25KRRB TDCF SGT
YCJ	1 1/4S **30**	NT SGT	**107.95** 4 1/4	**82.55** 3 1/4	**42.46** 1 43/64	**11100** 2500	**21800** 4900	5500 5800	GY1103KRRB3 TDCF GYE30KRRB TDCF SGT
YCJ	1 1/4 1 3/8 1 7/16 **35**	NT SGT	**117.48** 4 5/8	**92.08** 3 5/8	**49.21** 1 15/16	**15100** 3400	**28500** 6400	5500 5000 4800 4800	GY1104KRRB TDCF SGT GY1106KRRB TDCF SGT GY1107KRRB TDCF SGT GYE35KRRB TDCF SGT
YCJ	1 15/16	NT SGT	**142.88** 5 5/8	**111.13** 4 3/8	**60.72** 2 25/64	**22700** 5100	**39100** 8800	3600	GY1115KRRB TDCF SGT
YCJ	2	NT SGT	**161.93** 6 3/8	**130.18** 5 1/8	**64.69** 2 35/64	**28500** 6400	**48000** 10800	3400	GY1200KRRB TDCF SGT
YCJ	2 7/16	NT SGT	**174.63** 6 7/8	**142.88** 5 5/8	**74.22** 2 59/64	**35600** 8000	**58700** 13200	2800	GY1207KRRB TDCF SGT

Unit	Shaft Dia.	Type	H	J	L	E	Static Load Rating	Dynamic Load Rating	Speed Rating	Bearing No.
	in. **mm**		**mm** in.	**mm** in.	**mm** in.	**mm** in.	**N** lbs.	**N** lbs.	RPM	
YCJT	3/4	NT SGT	**111.92** 4 13/32	**89.69** 3 17/32	**60.33** 2 3/8	**38.50** 1 33/64	**6500** 1460	**14500** 3250	9200	G1012KRRB TDCF SGT
YCJT	1 **25**	NT SGT	**123.83** 4 7/8	**99.22** 3 29/32	**69.85** 2 3/4	**40.08** 1 37/64	**7700** 1730	**15800** 3550	6900 7000	G1100KRRB TDCF SGT GE25KRRB TDCF SGT
YCJT	1 3/16 1 1/4S **30**	NT SGT NT NT SGT	**141.29** 5 9/16	**116.68** 4 19/32	**79.38** 3 1/8	**43.66** 1 23/32	**11100** 2500	**21800** 4900	5800 5500 5800	G1103KRRB TDCF SGT G1103KRRB3 TDCF GE30KRRB TDCF SGT
YCJT	1 1/4 1 3/8 1 7/16 **35**	NT SGT	**155.58** 6 1/8	**130.18** 5 1/8	**92.08** 3 5/8	**49.21** 1 15/16	**15100** 3400	**28500** 6400	5500 5000 4800 4800	G1104KRRB TDCF SGT G1106KRRB TDCF SGT G1107KRRB TDCF SGT GE35KRRB TDCF SGT
YCJT	1 1/2 **40**	NT SGT	**171.45** 6 3/4	**143.67** 5 21/32	**104.78** 4 1/8	**54.37** 2 9/64	**19600** 4400	**36300** 8150	4600 4400	G1108KRRB TDCF SGT GE40KRRB TDCF SGT
YCJT	1 11/16 1 3/4	NT SGT	**179.39** 7 1/16	**148.03** 5 53/64	**111.13** 4 3/8	**55.56** 2 3/16	**20000** 4500	**36300** 8150	4100 3900	G1111KRRB TDCF SGT G1112KRRB TDCF SGT
YCJT	1 15/16	NT SGT	**188.91** 7 7/16	**157.16** 6 3/16	**115.89** 4 9/16	**60.72** 2 25/64	**22700** 5100	**39100** 8800	3600	G1115KRRB TDCF SGT
YCJT	2 3/16	NT SGT	**215.90** 8 1/2	**184.15** 7 1/4	**127.00** 5	**64.69** 2 35/64	**28500** 6400	**48000** 10800	3100	G1203KRRB TDCF SGT

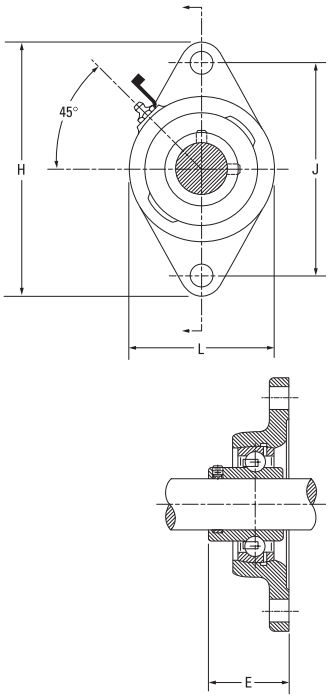

RAK/S SERIES

- This unit has the largest variety of configurations and shaft sizes and is used for the heaviest loads at the beginning of processing.
- Corrosion-resistant housing that is electroless nickel-plated and has a stainless-steel grease fitting. The protective cap withstands corrosion and prevents contamination.
- The corrosion-resistant insert bearing has stainless-steel balls with a nylon retainer. It also has industrial-duty contact seals with stainless-steel shroud caps.
- This unit has a stainless-steel lock collar.
- The unit is factory lubricated with FDA/USDA-approved grease (class H1 lubricant) for incidental food contact.

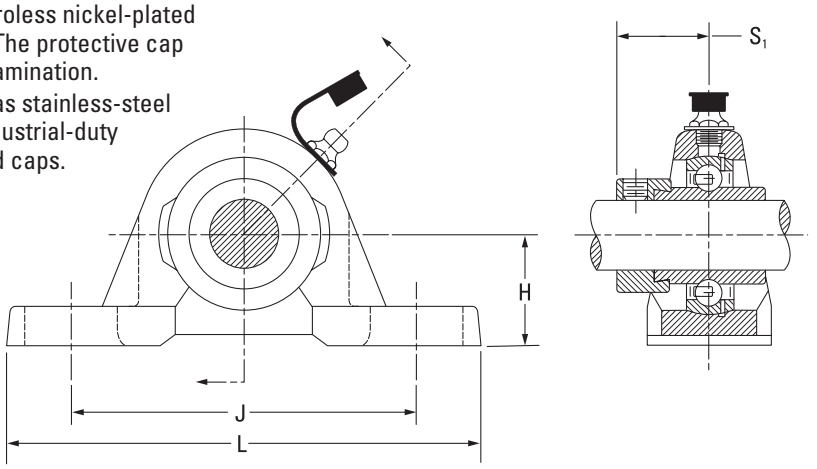

Unit[1]	Shaft Dia.	Type	RAK H	RAS H	J	L	S_1	Static Load Rating	Dynamic Load Rating	Speed Rating	Bearing No.		Collar No.
	in. **mm**		**mm** in.	**mm** in.	**mm** in.	**mm** in.	**mm** in.	**N** lbs.	**N** lbs.	RPM			
RAK/S	1/2 5/8	NT	**26.99** 1 1/6	**30.16** 1 3/16	**92.08** 3 5/8	**123.83** 4 7/8	**23.42** 59/64	**4700** 1060	**10700** 2400	13800 11000	G1008KRRB G1010KRRB	TDCF TDCF	S1008K SS S1010K SS
RAK/S	3/4	NT	**31.75** 1 1/4	**33.34** 1 5/16	**96.04** 3 25/32	**127.00** 5	**26.59** 1 3/64	**6500** 1460	**14500** 3250	9200	G1012KRRB	TDCF	S1012K SS
RAK/S	1 **25**	NT	**33.34** 1 5/16	**36.51** 1 7/16	**104.78** 4 1/8	**139.70** 5 1/2	**26.99** 1 1/6	**7700** 1730	**15800** 3550	6900 7000	G1100KRRB GE25KRRB	TDCF TDCF	S1100K SS SE25K SS
RAK/S	1 3/16 1 1/4S **30**	NT	**39.69** 1 9/16	**42.86** 1 11/16	**117.48** 4 5/8	**157.16** 6 3/16	**30.16** 1 3/16	**11100** 2500	**21800** 4900	5800 5500 5800	G1103KRRB G1103KRRB3 GE30KRRB	TDCF TDCF TDCF	S1103K SS S1103K3 SS SE30K SS
RAK/S	1 1/4 1 3/8 1 7/16	NT	**46.04** 1 13/16	**47.63** 1 7/8	**130.18** 5 1/8	**166.69** 6 9/16	**32.54** 1 9/32	**15100** 3400	**28500** 6400	5500 5000 4800	G1104KRRB G1106KRRB G1107KRRB	TDCF TDCF TDCF	S1104K SS S1106K SS S1107K SS
RAK/S	1 1/2 **40**	NT	**49.21** 1 15/16	**49.21** 1 15/16	**136.53** 5 3/8	**179.39** 7 1/16	**34.93** 1 3/8	**19600** 4400	**36300** 8150	4600 4400	G1108KRRB GE40KRRB	TDCF TDCF	S1108KT SS SE40K SS
RAK/S	1 11/16 1 3/4	NT	**52.39** 2 1/16	**53.98** 2 1/8	**149.23** 5 7/8	**191.29** 7 17/32	**34.93** 1 3/8	**20000** 4500	**36300** 8150	4100 3900	G1111KRRB G1112KRRB	TDCF TDCF	S1111K SS S1112K SS
RAK/S	1 15/16	NT	**55.56** 2 3/16	**57.15** 2 1/4	**157.96** 6 7/32	**200.03** 7 7/8	**38.10** 1 1/2	**22700** 5100	**39100** 8800	3600	G1115KRRB	TDCF	S1115K SS
RAK/S	2 2 3/16	NT	**61.91** 2 7/16	**63.50** 2 1/2	**176.21** 6 15/16	**222.25** 8 3/4	**43.66** 1 23/32	**28500** 6400	**48000** 10800	3400 3100	G1200KRRB G1203KRRB	TDCF TDCF	S1200K SS S1203K SS
RAK/S	2 7/16	NT	**68.26** 2 11/16	**69.85** 2 3/4	**188.12** 7 13/32	**239.71** 9 7/16	**46.83** 1 27/32	**35600** 8000	**58700** 13200	2800	G1207KRRB	TDCF	S1207K SS
RAK/S	2 11/16	NT	**76.20** 3	–	**203.20** 8	**266.70** 10 1/2	**51.59** 2 1/32	**42900** 9650	**69400** 15600	2600	G1211KRRB	TDCF	S1211K SS
RAK/S	2 15/16	NT	**84.14** 3 5/16	**82.55** 3 1/4	**241.30** 9 1/2	**304.80** 12	**54.77** 2 5/32	**43600** 9800	**69400** 15600	2300	G1215KRRB	TDCF	S1215K SS

[1]Option of low-base RAK or high-base RAS.

RCJ SERIES

- This unit has the largest variety of configurations and shaft sizes and is used for the heaviest loads at the beginning of processing.
- Corrosion-resistant housing that is electroless nickel-plated and has a stainless-steel grease fitting. The protective cap withstands corrosion and prevents contamination.
- The corrosion-resistant insert bearing has stainless-steel balls with a nylon retainer. It also has industrial-duty contact seals with stainless-steel shroud caps.
- This unit has a stainless-steel lock collar.
- The unit is factory lubricated with FDA/USDA-approved grease (class H1 lubricant) for incidental food contact.

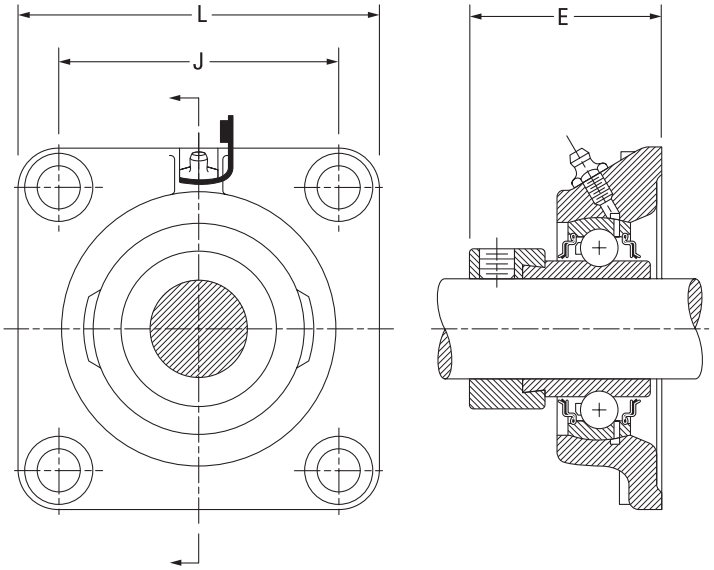

Unit	Shaft Dia.	Type	L	J	E	Static Load Rating	Dynamic Load Rating	Speed Rating	Bearing No.	Collar No.
	in. **mm**		**mm** in.	**mm** in.	**mm** in.	**N** lbs.	**N** lbs.	RPM		
RCJ	1/2 5/8	NT	**76.20** 3	**53.98** 2 1/8	**40.10** 1 19/32	**4700** 1060	**10700** 2400	13800 11000	G1008KRRB TDCF G1010KRRB TDCF	S1008K SS S1010K SS
RCJ	3/4	NT	**85.73** 3 3/8	**63.50** 2 1/2	**46.43** 1 53/64	**6500** 1460	**14500** 3250	9200	G1012KRRB TDCF	S1012K SS
RCJ	1 **25**	NT	**95.25** 3 3/4	**69.85** 2 3/4	**46.80** 1 27/32	**7700** 1730	**15800** 3550	6900 7000	G1100KRRB TDCF GE25KRRB TDCF	S1100K SS SE25K SS
RCJ	1 3/16 1 1/4S **30**	NT	**107.95** 4 1/4	**82.55** 3 1/4	**50.80** 2	**11100** 2500	**21800** 4900	5800 5500 5800	G1103KRRB TDCF G1103KRRB3 TDCF GE30KRRB TDCF	S1103K SS S1103K3 SS SE30K SS
RCJ	1 1/4 1 3/8 1 7/16	NT	**117.48** 4 5/8	**92.08** 3 5/8	**53.58** 2 7/64	**15100** 3400	**28500** 6400	5500 5000 4800	G1104KRRB TDCF G1106KRRB TDCF G1107KRRB TDCF	S1104K SS S1106K SS S1107K SS
RCJ	1 1/2 **40**	NT	**130.18** 5 1/8	**101.60** 4	**59.13** 2 21/64	**19600** 4400	**36300** 8150	4600 4400	G1108KRRB TDCF GE40KRRB TDCF	S1108KT SS SE40K SS
RCJ	1 11/16 1 3/4	NT	**136.53** 5 3/8	**104.78** 4 1/8	**59.13** 2 21/64	**20000** 4500	**36300** 8150	4100 3900	G1111KRRB TDCF G1112KRRB TDCF	S1111K SS S1112K SS
RCJ	1 15/16	NT	**142.88** 5 5/8	**111.13** 4 3/8	**66.68** 2 5/8	**22700** 5100	**39100** 8800	3600	G1115KRRB TDCF	S1115K SS
RCJ	2 2 3/16	NT	**161.93** 6 3/8	**130.18** 5 1/8	**75.41** 2 31/32	**28500** 6400	**48000** 10800	3400 3100	G1200KRRB TDCF G1203KRRB TDCF	S1200K SS S1203K SS
RCJ	2 7/16	NT	**174.63** 6 7/8	**142.88** 5 5/8	**81.76** 3 7/32	**35600** 8000	**58700** 13200	2800	G1207KRRB TDCF	S1207K SS
RCJ	2 11/16	NT	**187.33** 7 3/8	**149.23** 5 7/8	**90.49** 3 9/16	**42900** 9650	**69400** 15600	2600	G1211KRRB TDCF	S1211K SS
RCJ	2 15/16	NT	**196.85** 7 3/4	**152.40** 6	**96.84** 3 13/16	**43600** 9800	**69400** 15600	2300	G1215KRRB TDCF	S1215K SS

RCJT SERIES

- This unit has the largest variety of configurations and shaft sizes and is used for the heaviest loads at the beginning of processing.
- Corrosion-resistant housing that is electroless nickel-plated and has a stainless-steel grease fitting. The protective cap withstands corrosion and prevents contamination.
- The corrosion-resistant insert bearing has stainless-steel balls with a nylon retainer. It also has industrial-duty contact seals with stainless-steel shroud caps.
- This unit has a stainless-steel lock collar.
- The unit is factory lubricated with FDA/USDA-approved grease (class H1 lubricant) for incidental food contact.

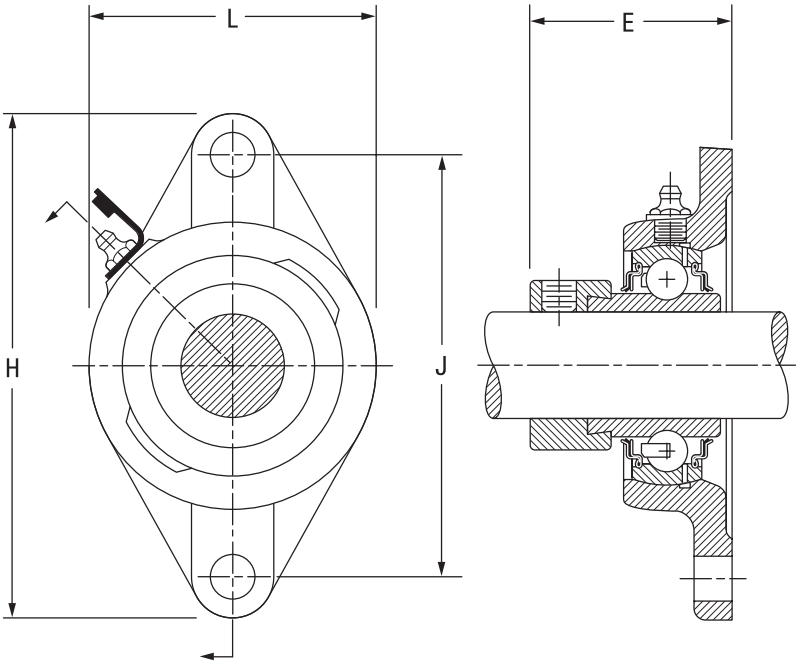

Unit	Shaft Dia.	Type	H	J	L	E	Static Load Rating	Dynamic Load Rating	Speed Rating	Bearing No.		Collar No.
	in. **mm**		**mm** in.	**mm** in.	**mm** in.	**mm** in.	**N** lbs.	**N** lbs.	RPM			
RCJT	1/2 5/8	NT	**98.43** 3 7/8	**76.20** 3	**54.0** 2 1/8	**40.61** 1 39/64	**4700** 1060	**10700** 2400	13800 11000	G1008KRRB G1010KRRB	TDCF TDCF	S1008K SS S1010K SS
RCJT	3/4	NT	**111.92** 4 13/32	**89.69** 3 17/32	**60.5** 2 3/8	**46.43** 1 53/64	**6500** 1460	**14500** 3250	9200	G1012KRRB	TDCF	S1012K SS
RCJT	1 **25**	NT	**123.83** 4 7/8	**99.22** 3 29/32	**69.85** 2 3/4	**46.83** 1 27/32	**7700** 1730	**15800** 3550	6900 7000	G1100KRRB GE25KRRB	TDCF TDCF	S1100K SS SE25K SS
RCJT	1 3/16 1 1/4S **30**	NT	**141.29** 5 9/16	**116.68** 4 19/32	**79.38** 3 1/8	**50.80** 2	**11100** 2500	**21800** 4900	5800 5500 5800	G1103KRRB G1103KRRB3 GE30KRRB	TDCF TDCF TDCF	S1103K SS S1103K3 SS SE30K SS
RCJT	1 1/4 1 3/8 1 7/16	NT	**155.58** 6 1/8	**130.18** 5 1/8	**92.08** 3 5/8	**53.58** 2 7/64	**15100** 3400	**28500** 6400	5500 5000 4800	G1104KRRB G1106KRRB G1107KRRB	TDCF TDCF TDCF	S1104K SS S1106K SS S1107K SS
RCJT	1 1/2 **40**	NT	**171.45** 6 3/4	**143.67** 5 21/32	**104.78** 4 1/8	**59.13** 2 21/64	**19600** 4400	**36300** 8150	4600 4400	G1108KRRB GE40KRRB	TDCF TDCF	S1108KT SS SE40K SS
RCJT	1 11/16 1 3/4	NT	**179.39** 7 1/16	**148.03** 5 27/32	**111.13** 4 3/8	**59.13** 2 21/64	**20000** 4500	**36300** 8150	4100 3900	G1111KRRB G1112KRRB	TDCF TDCF	S1111K SS S1112K SS
RCJT	1 15/16	NT	**188.91** 7 7/16	**157.16** 6 3/16	**115.89** 4 9/16	**66.68** 2 5/8	**22700** 5100	**39100** 8800	3600	G1115KRRB	TDCF	S1115K SS
RCJT	2 2 3/16	NT	**215.90** 8 1/2	**184.15** 7 1/4	**127.00** 5	**75.41** 2 31/32	**28500** 6400	**48000** 10800	3400 3100	G1200KRRB G1203KRRB	TDCF TDCF	S1200K SS S1203K SS

RTU SERIES

- This unit has the largest variety of configurations and shaft sizes and is used for the heaviest loads at the beginning of processing.
- Corrosion-resistant housing that is electroless nickel-plated and has a stainless-steel grease fitting. The protective cap withstands corrosion and prevents contamination.
- The corrosion-resistant insert bearing has stainless-steel balls with a nylon retainer. It also has industrial-duty contact seals with stainless-steel shroud caps.
- This unit has a stainless-steel lock collar.
- The unit is factory lubricated with FDA/USDA-approved grease (class H1 lubricant) for incidental food contact.

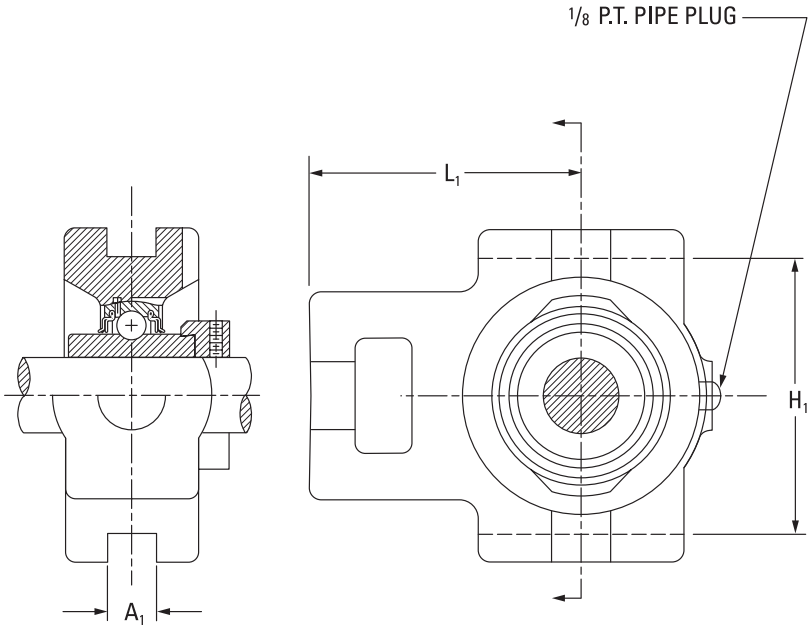

Unit	Shaft Dia.	Type	A_1	H_1	L_1	Static Load Rating	Dynamic Load Rating	Speed Rating	Bearing No.	Collar No.
	in. **mm**		**mm** in.	**mm** in.	**mm** in.	**N** lbs.	**N** lbs.	RPM		
RTU	1 **25**	NT	**13.49** 17/32	**76.20** 3	**67.47** 2 21/32	**7700** 1730	**15300** 3450	6900 7000	G1100KRRB TDCF GE25KRRB TDCF	S1100K SS SE25K SS
RTU	1 3/16 **30**	NT	**13.49** 17/32	**88.90** 3 1/2	**72.23** 2 27/32	**11100** 2500	**21800** 4900	5800 5800	G1103KRRB TDCF GE30KRRB TDCF	S1103K SS SE30K SS
RTU	1 1/4 1 7/16	NT	**13.49** 17/32	**88.90** 3 1/2	**74.61** 2 15/16	**15100** 3400	**28500** 6400	5500 4800	G1104KRRB TDCF G1107KRRB TDCF	S1104K SS S1107K SS
RTU	1 1/2 **40**	NT	**17.46** 11/16	**100.81** 3 31/32	**88.11** 3 15/32	**19600** 4400	**36300** 8150	4600 4400	G1108KRRB TDCF GE40KRRB TDCF	S1108KT SS SE40K SS
RTU	1 11/16 1 3/4	NT	**17.46** 11/16	**100.81** 3 31/32	**88.11** 3 15/32	**20000** 4500	**36300** 8150	4100 3900	G1111KRRB TDCF G1112KRRB TDCF	S1111K SS S1112K SS
RTU	1 15/16	NT	**17.46** 11/16	**100.81** 3 31/32	**91.28** 3 19/32	**22700** 5100	**39100** 8800	3600	G1115KRRB TDCF	S1115K SS
RTU	2 2 3/16	NT	**26.99** 1 1/16	**129.38** 5 3/32	**119.86** 4 23/32	**28500** 6400	**48000** 10800	3400 3100	G1200KRRB TDCF G1203KRRB TDCF	S1200K SS S1203K SS
RTU	2 7/16	NT	**26.99** 1 1/16	**129.38** 5 3/32	**119.86** 4 23/32	**35600** 8000	**58700** 13200	2800	G1207KRRB TDCF	S1207K SS

MISCELLANEOUS HOUSED UNITS

IDLER PULLEY UNITS

- A pressed-steel pulley and a Timken® precision ball bearing with rubber seals are combined to make a self-contained unit.
- Two pulley designs are available. One for V-belts and another for the backs of V-belts. Both are made for A, B, C and D section belts.
- A chain idler, identical in construction to the flat idler, is available, with the addition of an assembled rubber tire (part number A-10927). The rubber tire cushions the chain, preventing undue wear on the pulley surface or chain.
- Idler pulley units feature a Timken® single-row radial ball bearing with an inner ring extended on both sides. This provides clearance for abutting parts and greater support on the shaft.
- Contact-type rubber seals help ensure positive retention for lubricant and full protection against dirt, dust and foreign matter.
- All units are non-relubricatable. Special features include smoothly rolled-over edges, eliminating belt chafing and scuffing. The weep holes on the rivet circle allow water drainage when the pulley is mounted in a horizontal position.

To order, specify PULLEY NUMBER.

Example: 008-10853 Idler Pulley.

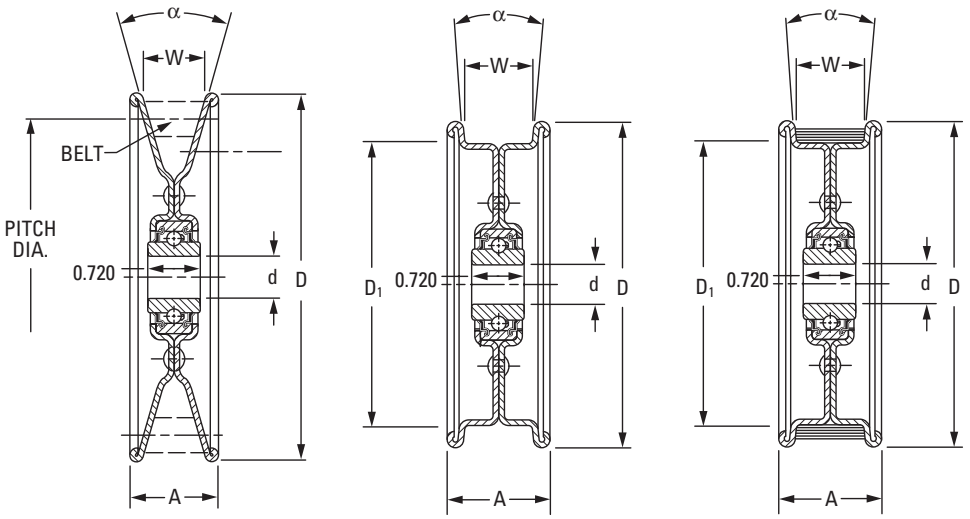

V - IDLER **FLAT - IDLER** **CHAIN - IDLER**

Pulley No.	α Included Angle Degrees	Bearing No.	Bore d	D	A	D_1	W	Wt.
			mm in.	**mm** in.	**mm** in.	**mm** in.	**mm** in.	**kg** lbs.
V IDLERS								
006-11520A[1]	32	WS3NPP3	**10.010/9.780** 0.3940/0.3850	**76.2** 3	**19.0** ¾	–	**12.45** 0.049	0.145 0.32
10874[2]	34	203NPP	**17.000/16.993** 0.6693/0.6690	**101.6** 4	**22.2** ⅞	–	**12.70** 0.500	0.417 0.92
010-10874	34	203KRR2	**16.130/16.260** 0.6350/0.6400	**101.6** 4	**22.2** 7.8	–	**12.70** 0.500	0.435 0.96
008-10482	32	203KRR5	**13.080/12.950** 0.5150/0.5100	**128.6** 5 1/16	**31.8** 1 1/4	–	**22.15** 0.872	**0.572** 1.26
010-10482	32	203KRR2	**16.130/16.260** 0.6350/0.6400	**128.6** 5 1/16	**31.8** 1 1/4	–	**22.15** 0.872	**0.558** 1.23
008-10853	32	203KRR5	**13.080/12.950** 0.5150/0.5100	**185.7** 7 5/16	**31.8** 1 1/4	–	**22.15** 0.872	**1.134** 2.50
010-10853	32	203KRR2	**16.13/16.260** 0.6350/0.6400	**185.7** 7 5/16	**31.8** 1 1/4	–	**22.15** 0.872	**1.120** 2.47

[1]Inner ring width 13.891 mm – 13.764 mm; (0.5469 in. – 0.5419 in.)
[2]12 mm (0.4724 in.) inner ring width 11.999 mm – 11.872 mm (0.4724 in. – 0.4674 in.).

Continued on next page.

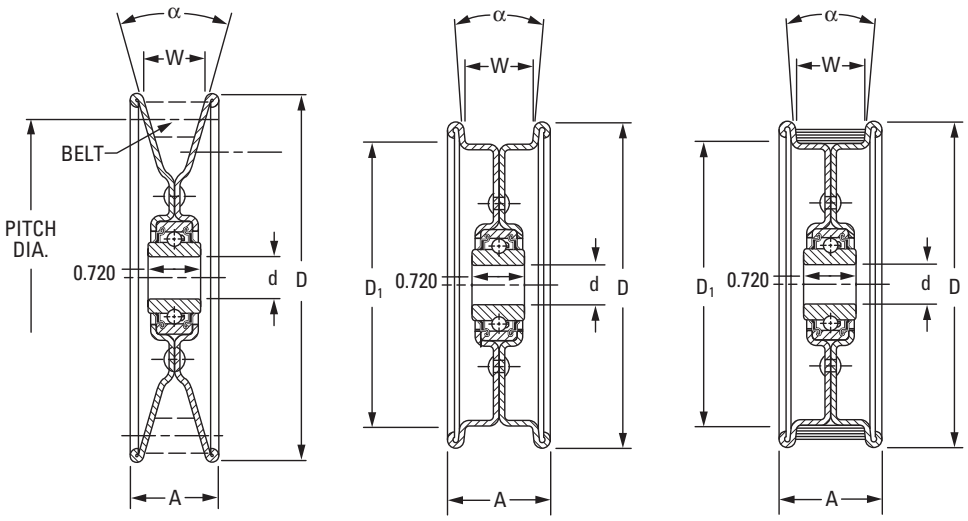

Continued from previous page.

Pulley No.	α Included Angle Degrees	Bearing No.	Bore d	D	A	D_1	W	Wt.
			mm in.	**mm** in.	**mm** in.	**mm** in.	**mm** in.	**kg** lbs.
FLAT IDLERS								
006-11581A[1]	10	WS3NPP3	**10.01/9.78** 0.394/0.385	**92.1** 3 5/8	**30.6** 1 7/32	**76.2** 3	**22.2** 7/8	**0.259** 0.57
008-10601	10	203KRR5	**13.08/12.95** 0.515/0.510	**117.5** 4 5/8	**36.5** 1 7/16	**101.6** 4	**25.4** 1	**0.503** 1.11
010-10601	10	203KRR2	**16.13/16.26** 0.635/0.640	**117.5** 4 5/8	**36.5** 1 7/16	**101.6** 4	**25.4** 1	**0.490** 1.08
FLAT IDLERS								
008-10483	10	203KRR5	**13.08/12.95** 0.515/0.510	**158.8** 6 1/4	**36.5** 1 7/16	**139.7** 5 1/2	**25.4** 1	**0.803** 1.77
010-10483	10	203KRR2	**16.13/16.26** 0.635/0.640	**158.8** 6 1/4	**36.5** 1 7/16	**139.7** 5 1/2	**25.4** 1	**0.789** 1.74
008-10650	50	203KRR5	**13.08/12.95** 0.515/0.510	**158.8** 6 1/4	**36.5** 1 7/16	**139.7** 5 1/2	**25.4** 1	**0.785** 1.73
010-10650	50	203KRR2	**16.13/16.26** 0.635/0.640	**158.8** 6 1/4	**41.3** 1 7/16	**139.7** 5 1/2	**25.4** 1	**0.771** 1.70
008-11515	10	203KRR5	**13.08/12.95** 0.515/0.510	**222.2** 8 3/4	**35.7** 1 13/32	**203.2** 8	**25.4** 1	**1.238** 2.73
010-11515	10	203KRR2	**16.13/16.26** 0.635/0.640	**222.2** 8 3/4	**35.7** 1 13/32	**203.2** 8	**25.4** 1	**1.225** 2.70
008-10731	10	203KRR5	**13.08/12.95** 0.515/0.510	**222.2** 8 3/4	**48.4** 1 29/32	**203.2** 8	**38.1** 1 1/2	**1.488** 3.38
010-10731	10	203KRR2	**16.13/16.26** 0.635/0.640	**222.2** 8 3/4	**48.4** 1 29/32	**203.2** 8	**38.1** 1 1/2	**1.474** 3.25
CHAIN IDLERS								
008-10927	10	203KRR5	**13.08/12.95** 0.515/0.510	**117.5** 4 5/8	**36.5** 1 7/16	**111.1** 4 3/8	**25.4** 1	**0.576** 1.27
010-10927	10	203KRR2	**16.13/16.26** 0.635/0.640	**117.5** 4 5/8	**36.5** 1 7/16	**111.1** 4 3/8	**25.4** 1	**0.562** 1.24

[1]Inner ring width 13.891 mm – 13.764 mm; (0.5469 in. – 0.5419 in.)
[2]12 mm (0.4724 in.) inner ring width 11.999 mm – 11.872 mm (0.4724 in. – 0.4674 in.).

ROLLER CHAIN IDLER SPROCKETS

- The sintered-steel sprockets are hardened and perform well at an economical cost.
- The roller chain idler sprocket replaces the hardened-plate steel sprockets on most applications.
- All units are non-relubricatable.

To order, specify SPROCKET NUMBER.

Example: 010-5017S Idler Sprocket.

Order all bearings with E8728 specification.

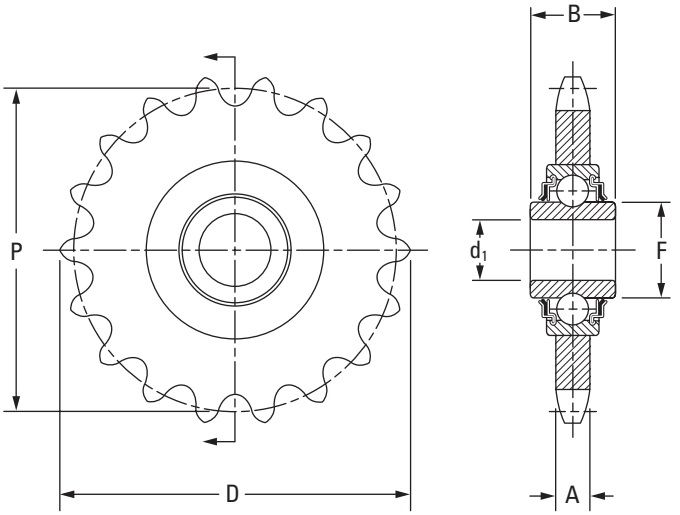

Sprocket No.	Bearing No.	Bore d_1	A.S.A. Chain No.	No. of Teeth	Pitch	P	D	A	F	B	Bearing Radial Load Rating @500 RPM	Wt.
		mm in.			**mm** in.	**mm** in.	**mm** in.	**mm** in.	**mm** in.	**mm** in.	**N** lbs.	**kg** lbs.
008-4018-S	203KRR5	**13.08/12.95** 0.5150/0.5000	40	18	**12.7** ½	**73.13** 2.879	**79.88** 3.145	**7.21** 0.284	**24.43** 0.962	**18.29** 0.72	**3550** 800	**0.200** 0.44
008-5017-S	203KRR5	**13.08/12.95** 0.5150/0.5000	50	17	**15.9** ⅝	**86.36** 3.400	**94.72** 3.729	**8.71** 0.343	**24.43** 0.962	**18.29** 0.72	**3550** 800	**0.299** 0.66
008-6015-S	203KRR5	**13.08/12.95** 0.5150/0.5000	60	15	**19.0** ¾	**91.62** 3.607	**101.32** 3.989	**11.66** 0.459	**24.43** 0.962	**18.29** 0.72	**3550** 800	**0.417** 0.92
010-4018-S	203KRR2	**16.26/16.13** 0.6400/0.6350	40	18	**12.7** ½	**73.13** 2.879	**79.88** 3.145	**7.21** 0.284	**24.43** 0.962	**18.29** 0.72	**3550** 800	**0.200** 0.44
010-5017-S	203KRR2	**16.26/16.13** 0.6400/0.6350	50	17	**15.9** ⅝	**86.36** 3.400	**94.72** 3.729	**8.71** 0.343	**24.43** 0.962	**18.29** 0.72	**3550** 800	**0.299** 0.66
010-6015-S	203KRR2	**16.26/16.13** 0.6400/0.6350	60	15	**19.0** ¾	**91.62** 3.607	**101.32** 3.989	**11.66** 0.459	**24.43** 0.962	**18.29** 0.72	**3550** 800	**0.417** 0.92
011H-5017-S	204KRR2	**17.65/17.52** HEX 0.6950/0.6900	50	17	**15.9** ⅝	**86.36** 3.400	**94.72** 3.729	**8.71** 0.343	**28.73** 1.131	**18.29** 0.72	**3550** 800	**0.299** 0.66
011H-6015-S	204RR2	**17.65/17.52** HEX 0.6950/0.6900	60	15	**19.0** ¾	**91.62** 3.607	**101.32** 3.989	**11.66** 0.459	**24.43** 0.962	**18.29** 0.72	**3550** 800	**0.417** 0.92
012-8012-S	204RR6	**19.18/19.05** 0.7500/0.7505	80	12	**25.4** 1	**98.15** 3.864	**110.41** 4.347	**14.60** 0.575	**26.62** 1.048	**15.49** 0.61	**4800** 1080	**0.676** 1.49

REPLACEMENT BEARINGS

TABLE A-26. HOUSED UNIT REPLACEMENT BEARINGS

Housed Units	Replacement Bearing Assembly	Features	Part No.
C	MUB replaced by 1000KRB & Col.	Standard series (SM) wide inner ring (B-type), collar, caps and wire	Example: 2 11/16 in. (uses MUB 2 11/16 in.)
DRNR	1000KR & Col. (Two)	Single R-seal (A-type), complete bearing number marked on seal	Example: DRNR 1 3/16 in. (uses two 1103KR & Col.)
FLCT	RA000RRB & Col.	Non-relubricatable; B-spherical outer ring; RR-double R-seal	Bearing identification marked on seal.
GRFD, GRFDR, GRFTD, GRFTDR	G1000KRRB & Col.	G-relubricatable; B-spherical outer ring; RR-double R-seal	Complete bearing number marked on seal. Example: GRFD 1 3/16 in. (uses G1103KRRB & Col.)
GRKD, GRSD	G1000KRRB & Col.	G-relubricatable; B-spherical outer ring; RR-double R-seal	Complete bearing number marked on seal. Example: GRKD 1 3/16 in. (uses G1103KRRB & Col.)
GVFD, GVFDR, GVFTD, GVFTDR	GRA000RRB & Col.	G-relubricatable; B-spherical outer ring; RR-double R-seal	Bearing identification marked on seal.
GVKD, GVSD	GRA000RRB & Col.	G-relubricatable; B-spherical outer ring; RR-double R-seal	Bearing identification marked on seal.
LAK, LAS	G1000KLLB & Col.	G-relubricatable; B-spherical outer ring; LL-double Mechani-seal	Complete bearing number marked on seal. Example: LAK 1 3/16 in. (uses G1103KLLB & Col.)
LAKHL	1000KLS & Col.	L-single Mechani-seal; S-external self-aligning	Complete bearing number marked on seal. Example: LAKHL 1 3/16 in. (uses 1103KLS & Col.)
LAO, LSAO	GN000KLLB & Col.	G-relubricatable; B-spherical outer ring; LL-double Mechani-seal	Complete bearing number marked on seal. Example: LAO 1 3/16 in. (uses GN103KLLB & Col.)
LCJ, LCJT	G1000KLLB & Col.	G-relubricatable; B-spherical outer ring; LL-double Mechani-seal	Complete bearing number marked on seal. Example: LCJ 1 3/16 in. (uses G1103KLLB & Col.)
LCJO	GN000KLLB	G-relubricatable; N-Heavy series; B-spherical outer ring; LL-double Mechani-seal	Complete bearing number marked on seal. Example: LCJO 1 3/16 in. (uses GN103KLLB & Col.)
PB, PBS, VKD, VSD	RA000RRB & Col.	Non-relubricatable; B-spherical outer ring; RR-double R-seal	Bearing identification marked on seal.
RA Flangette, RAT Flangette	RA000RRB & Col.	Non-relubricatable; B-spherical outer ring; RR-double R-seal	Bearing identification marked on seal.
RA Relubricatable Flangette	GRA000RRB & Col.	G-relubricatable; B-spherical outer ring; RR-double R-seal	To order, specify bearings and markings. Example: 1-GRA103RRB & Col., 1-G62MSA marking, 1-G62MSB marking
RAK, RAS, RAKH, RSA	G1000KRRB & Col.	G-relubricatable; B-spherical outer ring; RR-double R-seal	Complete bearing number marked on seal. Example: RAK 1 3/16 in. (uses G1103KRRB & Col.)
RAKHL	1000KRS & Col	R-Single R-seal; S-external self-aligning	Complete bearing number marked on seal. Example: RAKHL 1 3/16 in. (uses 1103KRS & Col.)
RAKN, RASN	1000KRRB & Col.	Non-relubricatable; B-spherical outer ring; RR-double R-seal	Complete bearing number marked on seal. Example: RAKN 1 3/16 in. (uses 1103KRRB & Col.)
RAO, RSAO	GN000KRRB & Col.	G-relubricatable; B-spherical outer ring; RR-double R-seal	Complete bearing number marked on seal. Example: RSAO 3 3/16 in. (uses GN303KRRB & Col.)
RASC	GC1000KRRB & Col.	G-relubricatable; C-concentric collar; B-spherical outer ring; RR-double R-seal	Complete bearing number marked on seal. Example: RASC 1 3/16 in. (uses GC1103KRRB & Col.)
RCJ, RCJT, RC	G1000KRRB & Col.	G-relubricatable; B-spherical outer ring; RR-double R-seal	Complete bearing number marked on seal. Example: RCJ 1 3/16 in. (uses G1103KRRB & Col.)
RCJN, RR Flangette, RRT Flangette	1000KRRB & Col.	Non-relubricatable; B-spherical outer ring; RR-double R-seal	Complete bearing number marked on seal. Example: RCJN 1 3/16 in. (uses 1103KRRB & Col.)
RFC, RCJC, RCJTC	GC1000KRRB & Col.	G-relubricatable; C-concentric collar; B-spherical outer ring; RR-double R-seal	Complete bearing number marked on seal. Example: 1 3/16 in. (uses GC1103KRRB & Col.)
RFD, RFDR, RFTD, RFTDR	1000KRRB & Col.	Non-relubricatable; B-spherical outer ring; RR-double R-seal	Complete bearing number marked on seal. Example: RFD: 1 3/16 in. (uses 1103KRRB & Col.)

Continued on next page.

Continued from previous page.

Housed Units	Replacement Bearing Assembly	Features	Part No.
RKD, RSD	1000KRRB & Col.	Non-relubricatable; B-spherical outer ring; RR-double R-seal	Complete bearing number marked on seal. Example: RKD 1 3/16 in. (uses 1103KRRB & Col.)
RPB	RABR (shaft size)	Non-relubricatable; B-spherical outer ring; RR-double R-seal	RA000RRB FS-450 Bearing and Col. mounted in rubber interliner. Example: RPB 1 3/16 in. (uses an RABR 1 3/16 in.)
RR Relubricatable Flangette	G1000KRRB & Col.	G-relubricatable; B-spherical outer ring; RR-double R-seal	To order, specify bearing and markings. Example: 1-G1100KRRB & Col., 1-G52MSA marking, 1-G52MSB marking
SA	MUB replaced by 1000KRB & Col.	Standard series (SM) wide-inner-ring ball bearing (B-type), collar, caps and wire	Example: SA 1 3/16 in. (uses MUB 1 3/16 in.)
SAD	MUBD replaced by 1000KRB & Col.	Standard series (SM) wide-inner-ring ball bearing (B-type), dust seal, collar, caps and wire	Example: SA 1 3/16 in. (uses MUB 1 3/16 in.)
SADD	MUBD replaced by N000KRB & Col.	Rear dust seal, otherwise same as SAD	
SAL	SM1000KS & Col.	S-external self-aligning ring	Example: SAL 1 3/16 in. (uses SM1103KS & Col.)
SAO	MUOB replaced by 100KRB & Col.	Heavy series (SMN) wide-inner-ring ball bearing (B-type), collar, caps and wire	Example: SAO 1 3/16 in. (uses MUOB 1 3/16 in.)
SAOD	MUOBD (shaft size}	Heavy series (SMN) wide-inner-ring ball bearing (B-type), dust seal, collar, caps and wire	Example: SAOD 1 3/16 in. (uses MUOBD 1 3/16 in.)
SAODD	MUOBD (shaft size}	Rear dust seal, otherwise same as SAOD	
SAOL	SMN000KS & Col.	S-external self-aligning ring heavy series	Example: SAOL 1 3/16 in. (uses SMN103KS & Col.)
SAS, SAK	GYA000RRB	G-relubricatable; B-spherical outer ring; RR-double R-seal	Bearing identification marked on seal.
SCJ, SCJT	GYA00RRB	G-relubricatable; B-spherical outer ring; RR-double R-seal	Bearing identification marked on seal.
TAK, TAS	G1000KPPB & Col.	G-relubricatable; B-spherical outer ring; PP-Double tri-ply seal	Complete bearing number marked on seal. Example: TAK 1 3/16 in. (uses G1103KPPB3 & Col.)
TCJ, TCJT	G1000KPPB & Col.	G-relubricatable; B-spherical outer ring; PP-Double tri-ply seal	Complete bearing number marked on seal. Example: TCJ 1 3/16 in. (uses G1103KPPB3 & Col.)
VAK, VAS	GRA000RRB & Col.	G-relubricatable; B-spherical outer ring; RR-double R-seal	Bearing identification marked on seal.
VCJ, VCJT	GRA000RRB & Col.	G-relubricatable; B-spherical outer ring; RR-double R-seal	Bearing identification marked on seal.
VFD, VFDR, VFTD, VFTDR	RA000RRB & Col.	Non-relubricatable; B-spherical outer ring; RR-double R-seal	Bearing identification marked on seal.
YAS, YAK, YASM, YCJ, YCJT, YTU	GY-KRRB	G-relubricatable; B-spherical outer ring; RR-double R-seal, Y-series wide inner ring	Bearing identification marked on seal.
OTHER TYPES			
LTU Take-Up	G1000KLLB & Col.	G-relubricatable; B-spherical outer ring; LL-double Mechani-seal	Complete bearing number marked on seal. Example: LTU 1 3/16 in. (uses G1103KLLB & Col.)
RHC, RHCM Hanger	GC1000KRRB & Col.	G-relubricatable; C-concentric collar; B-spherical outer ring; RR-double R-seal	Complete bearing number marked on seal. Example: RCH 1 1/2 in. (uses GC1108KRRB & Col.)
RTU Take-Up	G1000KRRB & Col.	G-relubricatable; B-spherical outer ring; RR-double R-seal	Complete bearing number marked on seal. Example: RTU 1 3/16 in. (uses G1103KRRB & Col.)
STU Take-Up	GYA-RRB	G-relubricatable; B-spherical outer ring; RR-double R-seal	Complete bearing number marked on seal. Example: STU 1 3/16 in. (uses GYA103RRB)
TU Take-Up	MUB replaced by 1000KRB & Col.	Standard series (SM) wide-inner-ring ball bearing (B-type), collar, caps and wire	Example: TU 2 11/16 in. (uses MUB 2 11/16 & Col.)
YTU Take-Up	GY-KRRB	G-relubricatable; B-spherical outer ring; RR-double R-seal; Y-series wide inner ring with set screw lock	Complete bearing number marked on seal. Example: YTU 1 3/16 in. (uses GY1103KRRB)

MACHINE UNITS

A complete machine unit consists of either a standard (SM) or heavy (SMN) series wide-inner-ring ball bearing, an inner and outer sealing cap, a retaining wire and self-locking collar, or an integrally sealed bearing and collar. These units are available as bearing replacements for Timken power transmission units such as the SA, SAO, DSA and DSAO pillow blocks, and C and Co cylindrical cartridges or special housings.

These are available in two types, A and B, as described below.

A-TYPE

Fig. A-27 shows a machine unit with an A-type bearing carrying the designation MUA (standard series) and MUOA (heavy series). It consists of a wide inner ring, open type or one-piece R-seal bearing, collar, caps and wire. The "caps" are two steel members which comprise a non-integral frictionless labyrinth seal. The inner member is pressed on the inner ring and rotates with it. The outer member is pressed in the housing against the face of the outer ring and is held in place by the round retaining wire.

B-TYPE

Fig. A-28 is the same as fig. A-27, except that the bearing is B-type and the seal on the collar side is either a labyrinth seal (as shown) or a one-piece R-seal. In the latter case no wire is supplied. The designation of the machine unit is MUB (standard series) or MUOB (heavy series). The B-type bearing is mounted in the spherical housing seat by means of two slots milled diametrically opposite each other in the housing. The bearing can be inserted at right angles and swiveled into position. No additional shoulders or snap rings are required to locate this type.

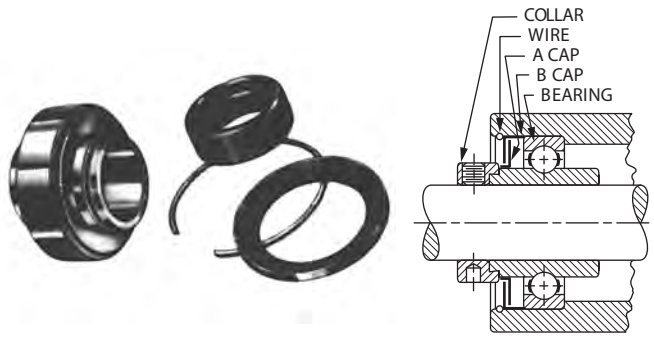

Fig. A-27. MUA, MUOA.

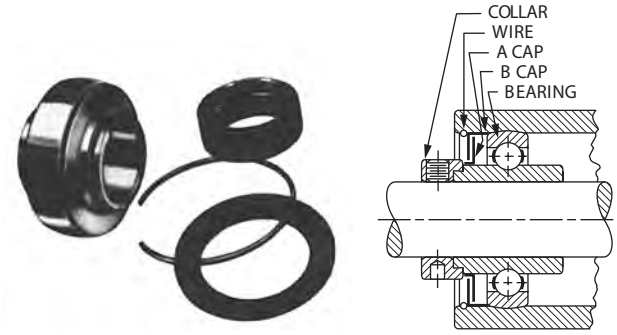

Fig. A-28. MUB, MUOB.

TIMKEN® BALL BEARING HOUSED UNIT SAFETY END CAPS MAKE WORKPLACE PROTECTION A SNAP

Easy-to-install Timken® safety end caps protect exposed rotating shafts, reducing hazards around many types of equipment.

The Timken safety product line consists of a mounting ring and snap-on cover, both molded in durable, bright-yellow polymer. The end cap snaps into the adhesive-backed ring that adheres to the outboard face of most flanged bearing housings. The secure 360-degree fit makes for a rugged unit that also provides basic protection and washdown.

Factory retrofits are a snap with everything provided in a handy kit. The cost-effective end covers are simple-to-install on Timken and most other flanged units. Current sizes range from 20 mm to 50 mm (3/4 in. to 1 15/16 in.) shaft sizes for two or four-bolt flanged cast-iron, malleable iron and other selected housing styles and sizes.

Fig. A-29. Safety end caps protect against rotating stub shafts.

KIT CONTENTS

Timken safety end caps come in a convenient kit that contains everything required for a safe and durable mounting:

- Polymer end cap.
- Adhesive-backed polymer mounting ring.
- Scuffing pad.
- Cleaning cloth.

INSTALLATION

Steps in the simple mounting procedure include:

1. Use the scuffing pad on housing's mating surface where the mounting ring will be placed.
2. Clean off the mounting area.
3. Attach the adhesive-backed mounting ring.
4. Hold the mounting ring in place with pressure for 60 seconds.
5. Allow the adhesive to set for a minimum of one hour.
6. Snap the end cap into place.

ORDERING INFORMATION

TABLE A-27. ORDERING INFORMATION

Kit[1]	Shaft Sizes
204 ECY Kit	**20 mm,** 3/4
205 ECY Kit	**25 mm,** 7/8, 15/16, 1
206 ECY Kit	**30 mm,** 1 1/16, 1 1/8,1 3/16, 1 1/4 S
207 ECY Kit	**35 mm,** 1 1/4, 1 5/16, 1 3/8, 1 7/16,
208 ECY Kit	**40 mm,** 1 1/2
209 ECY Kit	**45 mm,** 1 5/8, 1 11/16, 1 3/4
210 ECY Kit	**50 mm,** 1 15/16, 2 S

[1]Kits are designed to fit the following housed units –
Four-bolt: YCJ, RCJ, RCJC, TCJ, LCJ, SCJ, VCJ
Two-bolt: YCJT, RCJT, RCJTC, TCJT, LCJT, SCJT, VCJT

INDEX

BALL BEARING HOUSED UNITS

10M 12-14: 29 Order No. 10591 | Timken® is a registered trademark of The Timken Company. | © 2013 The Timken Company | Printed in U.S.A.

TIMKEN

The Timken team applies their know-how to improve the reliability and performance of machinery in diverse markets worldwide. The company designs, makes and markets high-performance mechanical components, including bearings, gears, chain and related mechanical power transmission products and services.

www.timken.com

Stronger. **Commitment.** Stronger. **Value.** Stronger. **Worldwide.** Stronger. **Together.** | Stronger. **By Design.**

Price: USD $75

TIMKEN

TIMKEN® SPLIT CYLINDRICAL ROLLER BEARING HOUSED UNIT CATALOG

ABOUT THE TIMKEN COMPANY

As a global leader in bearings and power transmission systems, Timken focuses on precise solution design, materials and craftsmanship to deliver reliable and efficient performance that improves productivity and uptime. Timken offers a full range of bearings, belts, chains, couplings, gears and lubricants, along with rebuild and repair services. Timken (NYSE; TKR; www.timken.com) applies its proven expertise in metallurgy, tribology and mechanical power transmission to create innovative approaches to customers' complex needs. Global availability of products and engineering talent, combined with exceptional service delivery across markets, makes Timken a preferred choice worldwide.

To view more Timken catalogs, go to www.timken.com/catalogs for interactive versions, or to download our catalog app to your smartphone or mobile device.

TIMKEN® SPLIT CYLINDRICAL ROLLER BEARING HOUSED UNIT CATALOG INDEX

TAKING THE INITIATIVE

In today's demanding industrial environment, specialist technology is, more than ever, key to improved efficiency, productivity and ultimately profitability. Timken is increasingly seen as a product brand, that routinely challenges technological boundaries.

Rapid response and flexibility result from a production facility manufacturing not only split cylindrical roller bearing assemblies but also cutting edge products for aerospace and railway. The unique relationship between manufacturer and distributors combined with innovative cellular manufacturing and modular stocking offer unparalleled availability.

From concept to design, design to production, and then throughout the life cycle of the unit, no other split bearing manufacturer works so hard to exceed your expectations.

PERFORMANCE

Timken products are designed and developed to maximize service life and minimize maintenance effort.

Timken bearings have machined brass cages with unique single-piece clips as standard; rolling elements are profiled to minimize damaging edge stresses and provide optimum rolling contact.

All supports and housings incorporate pry slots and doweled machined joints for easy separation. Supports are manufactured from high-strength cast iron and feature double webs and thick sections. Product life is thus enhanced due to high rigidity and inherent strength.

INNOVATION IN SERVICE

Producing products that push the boundaries of performance is only the beginning. Timken recognizes that users and specifiers of split cylindrical roller bearings demand logistical, technical and after-sales support.

Experienced application engineering support assists customers with concepts through consultation, commissioning, training, supply and post installation support.

Regional inventory provides excellent availability of product in the right place at the right time.

INNOVATION IN APPLICATION

The benefits of totally split-to-the-shaft bearing assemblies are long-established; subsequent savings in production and maintenance are well documented.

However, split cylindrical roller bearings are today being selected for an even wider range of applications. Additional sealing options allow our bearings to run at higher speeds and temperatures in increasingly more hostile environments.

Optimization of plant efficiency is the goal of today's maintenance engineer. The application of reliable products offering real savings is derived from increased mean time between failures. This widens periods between planned shutdowns and also eliminates unplanned downtime when utilizing advanced components accommodating split options.

ADVANTAGES OF SPLIT CYLINDRICAL ROLLER BEARING HOUSED UNITS

Split cylindrical roller bearings are essential in applications involving limited access and are highly cost effective by reducing down time and production losses during change-outs.

Split cylindrical roller bearings are completely split to the shaft. Installation and inspection times are therefore dramatically less than for solid bearings. Additionally, the time saved and costs eliminated by not having to remove ancillary equipment results in even higher potential savings.

INSPECTION SIMPLIFIED

No matter what the size or type of split cylindrical roller bearing, inspection is straightforward. Simply remove the support cap and the top half of the housing and all bearing parts become visible and accessible.

SHORT TERM PAYBACK, LONG TERM BENEFITS

Though it would be easy to cite examples where the use of split bearings results in spectacular savings, significant savings can be seen in almost any trapped application. Even modest savings can be enough to justify the use of split bearings. Depending on the application, down times for replacement of split bearings can be a small fraction of those required for solid bearings. This yields savings in both maintenance work-hours and lost production.

When such cost savings are taken into account at the bearing selection stage, it's easy to make the case for choosing Timken split cylindrical roller bearings.

FURTHER SAVINGS

Anywhere Timken bearings are used to replace other split bearing brands, the potential for savings exists. Through the use of machined brass cages as standard, inclusion of profiled rolling elements and the incorporation of high-grade materials for housings and supports, Timken bearings have the capability to extend service life leading to a reduction in bearing consumption.

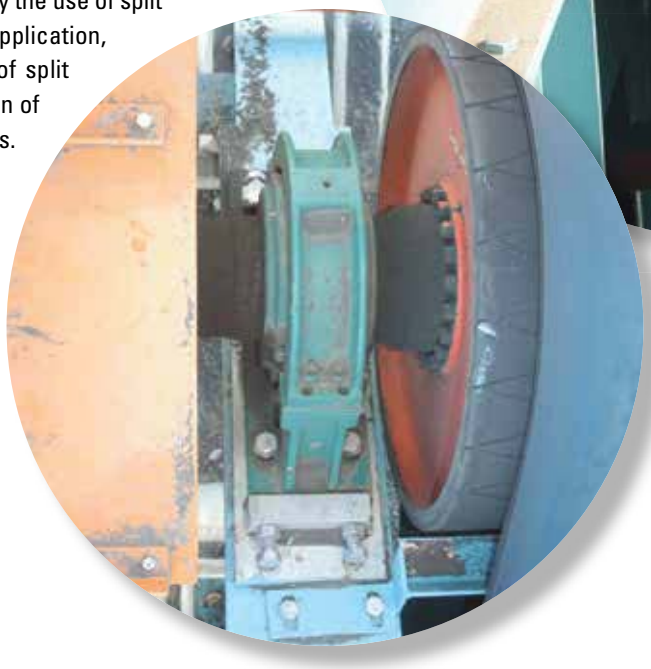

FEATURES AND BENEFITS

TABLE 1. SPLIT CYLINDRICAL ROLLER BEARING HOUSED UNIT FEATURES AND BENEFITS

Features	Benefits
All components are totally split to the shaft	Quick and easy installation. Substantial reduction in downtime compared to replacement of solid bearings
Support caps and housing halves are quickly removed	Easy visual inspection to assess the condition of the bearing (during planned maintenance)
Replacement bearing interchangeability with existing housing	Simple and economic bearing replacement
Unit accommodates initial misalignment	Simplifies installation of associated equipment
Machined brass cage as standard	Enhanced ability to accommodate higher speeds and temperatures
Innovative cage clip design	Clips retained on one cage half during assembly and disassembly
ASTM 48A – Grade 35 Cast Iron	Strength and durability
Profiled rolling elements	Minimizes damaging edge stresses

HOW TO USE THIS CATALOG

We designed this catalog to help you find the Timken bearings best suited to your equipment needs and specifications.

The product tables list split bearing housed units and components. For other bearing types, please refer to the respective Timken product catalog reference.

Timken offers an extensive range of bearings and accessories in both imperial and metric sizes. For your convenience, size ranges are indicated in millimeters and inches. Contact your Timken engineer to learn more about our complete line for the special needs of your application.

This publication contains dimensions, tolerances and load ratings, as well as engineering sections describing mounting and fitting practices for shafts and housings, internal clearances, materials and other bearing features. It provides valuable assistance in the initial consideration of the type and characteristics of the bearings that may best suit your particular needs.

ISO and ANSI/ABMA, as used in this publication, refer to the International Organization for Standardization and the American National Standards Institute/American Bearing Manufacturers Association.

Updates are made periodically to this catalog. Visit www.timken.com for the most recent version of the Timken Split Cylindrical Roller Bearing Housed Unit Catalog.

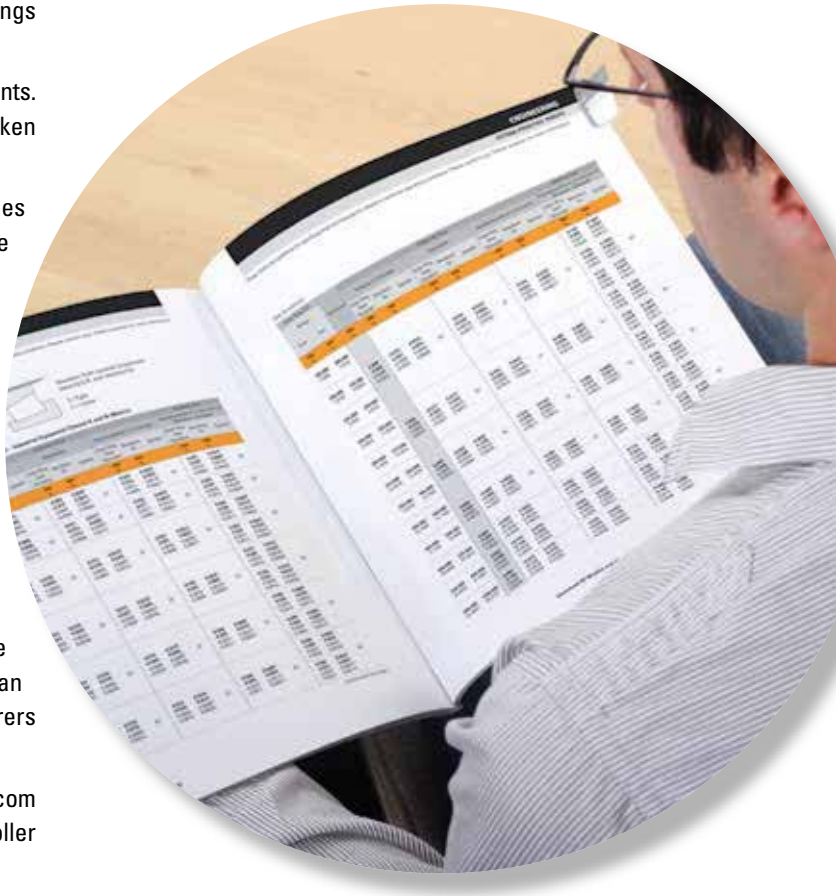

SHELF LIFE AND STORAGE OF GREASE-LUBRICATED BEARINGS AND COMPONENTS

To help you get the most value from our products, Timken provides guidelines for the shelf life of grease-lubricated ball and roller bearings, components and assemblies. Shelf life information is based on Timken and industry test data and experience.

SHELF LIFE

Shelf life should be distinguished from lubricated bearing/component design life as follows:

- Shelf life of the grease-lubricated bearing/component represents the period of time prior to use or installation.
- The shelf life is a portion of the anticipated aggregate design life. It is impossible to accurately predict design life due to variations in lubricant bleed rates, oil migration, operating conditions, installation conditions, temperature, humidity and extended storage.
- Shelf life values, available from Timken, represent a maximum limit and assume adherence to the storage and handling guidelines suggested in this catalog or by a Timken associate. Deviation from the Timken storage and handling guidelines may reduce shelf life. Any specification or operating practice that defines a shorter shelf life should be used.

Timken cannot anticipate the performance of the grease lubricant after the bearing or component is installed or placed in service.

TIMKEN IS NOT RESPONSIBLE FOR THE SHELF LIFE OF ANY BEARING/COMPONENT LUBRICATED BY ANOTHER PARTY.

SPLIT CYLINDRICAL ROLLER BEARING HOUSED UNITS ARE NOT SHIPPED PRE-GREASED.

EUROPEAN REACH COMPLIANCE

Timken lubricants, greases and similar products sold in stand alone containers or delivery systems are subject to the European REACH (Registration, Evaluation, Authorization and Restriction of Chemicals) directive. For import into the European Union, Timken can sell and provide only those lubricants and greases that are registered with ECHA (European Chemicals Agency). For further information, please contact your Timken engineer.

STORAGE

Timken suggests the following storage guidelines for our finished products (bearings, components and assemblies, referred to as "products"):

- Unless directed otherwise by Timken, products should be kept in their original packaging until they are ready to be placed into service.
- Do not remove or alter any labels or stencil markings on the packaging.
- Products should be stored in such a way that the packaging is not pierced, crushed or otherwise damaged.
- After a product is removed from its packaging, it should be placed into service as soon as possible.
- When removing a product that is not individually packaged from a bulk pack container, the container should be resealed immediately after the product is removed.
- Do not use product that has exceeded its shelf life as defined in the Timken shelf life guidelines statement.
- The storage area temperature should be maintained between 0º C (32º F) and 40º C (104º F); temperature fluctuations should be minimized.
- The relative humidity should be maintained below 60 percent and the surfaces should be dry.
- The storage area should be kept free from airborne contaminants such as, but not limited to, dust, dirt, harmful vapors, etc.
- The storage area should be isolated from undue vibration.
- Extreme conditions of any kind should be avoided.

Due to the fact that Timken is not familiar with your particular storage conditions, we strongly suggest following these guidelines. However, you may be required by circumstances or applicable government requirements to adhere to stricter storage requirements.

Most bearing components typically ship protected with a corrosion-preventive compound that is not a lubricant. These components may be used in oil-lubricated applications without removal of the corrosion-preventive compound. When using some specialized grease lubrications, we advise you to remove the corrosion-preventive compound before packing the bearing components with suitable grease.

When you receive a bearing or housed unit shipment, do not remove products from their packaging until they are ready for mounting so they do not become corroded or contaminated.

Store bearings and housed units in an appropriate atmosphere so they remain protected for the intended period.

WARNINGS

WARNING

Failure to observe the following warnings could create a risk of death or serious injury.

Proper maintenance and handling practices are critical. Always follow installation instructions and maintain proper lubrication.

Overheated bearings can ignite explosive atmospheres. Special care must be taken to properly select, install, maintain, and lubricate housed unit bearings that are used in or near atmospheres that may contain explosive levels of combustible gases or accumulations of dust such as grain, coal, or other combustible materials.

Never spin a bearing with compressed air. The components may be forcefully expelled.

CAUTION

Failure to follow these cautions may result in property damage.

Do not use damaged housed units.

When fitting the inner ring there should be an equal gap at each joint. If there are no gaps do not proceed.

Warnings for this product line are in this catalog and posted on http://www.timken.com/legal-notices/

NOTE

Do not use excessive force when mounting or dismounting the unit.

Follow all tolerance, fit, and torque recommendations.

Ensure proper alignment.

Never weld housed units.

Do not heat components with an open flame.

Do not operate at bearing temperatures above 121° C (250° F).

Never interchange components between completed bearing assemblies.

Never use a hammer and steel bar on a bearing for installation or removal. Use only a brass bar or a soft-headed mallet.

Consult your equipment designer or supplier for installation and maintenance instructions.

Never use steam or hot water when cleaning the bearings because these methods can create rust or corrosion.

Never expose any surface of a bearing to the flame of a torch.

Do not heat bearing beyond 149˚ C (300˚ F).

DISCLAIMER

This catalog is provided solely to give you analysis tools and data to assist you in your product selection. Product performance is affected by many factors beyond the control of Timken. Therefore, you must validate the suitability and feasibility of all product selections.

Timken products are sold subject to the Timken terms and Conditions of Sale, which include our limited warranty and remedy. You can find these at https://www.timken.com/legal notices/termsandconditionsofsale/.

Please consult with your Timken engineer for more information and assistance. Every reasonable effort has been made to ensure the accuracy of the information in this writing, but no liability is accepted for errors, omissions or for any other reason.

ENGINEERING

The following topics are covered within this section:

STANDARD UNIT ANATOMY

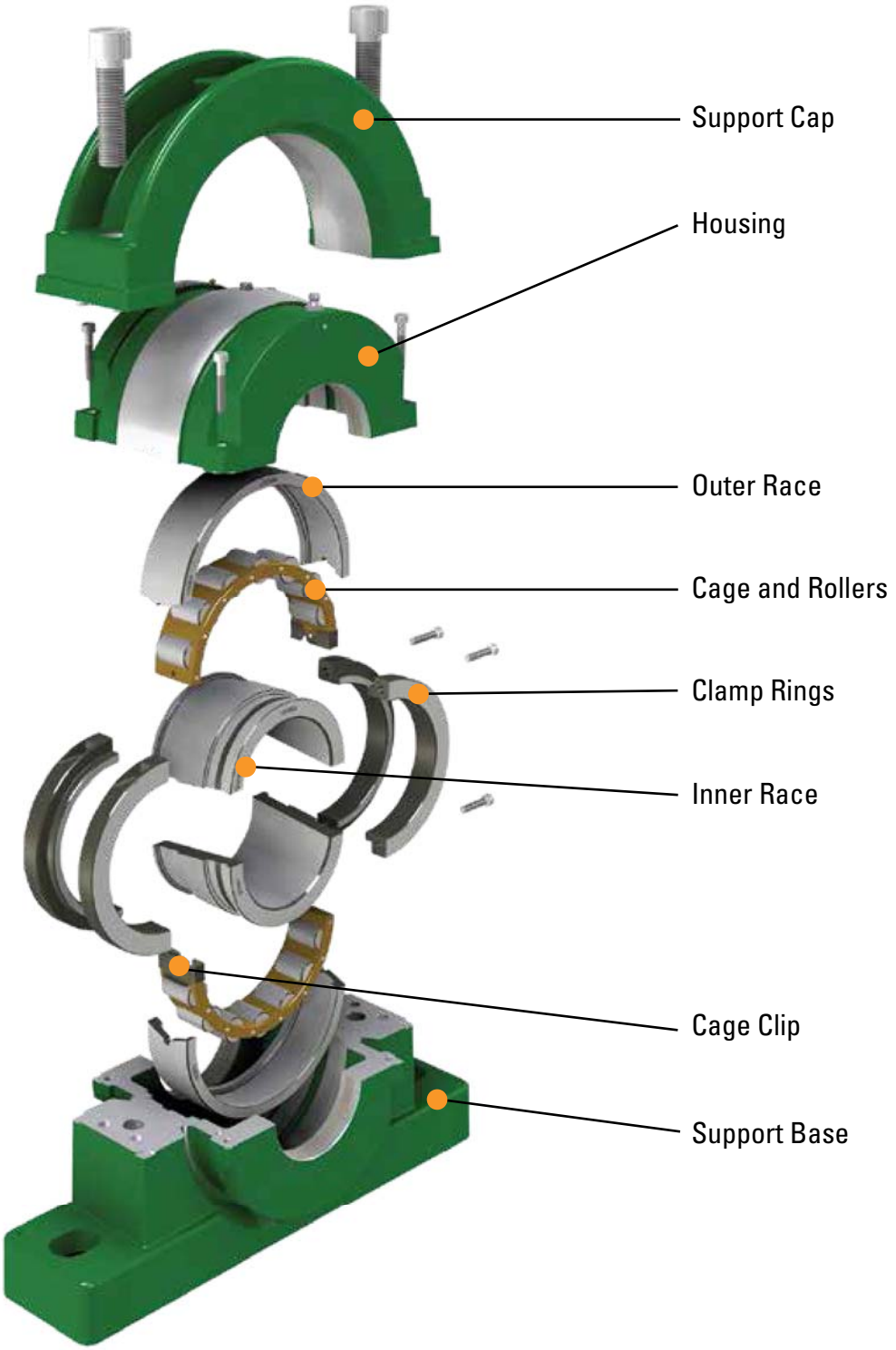

Fig. 1. Standard unit anatomy.

TECHNICAL FEATURES

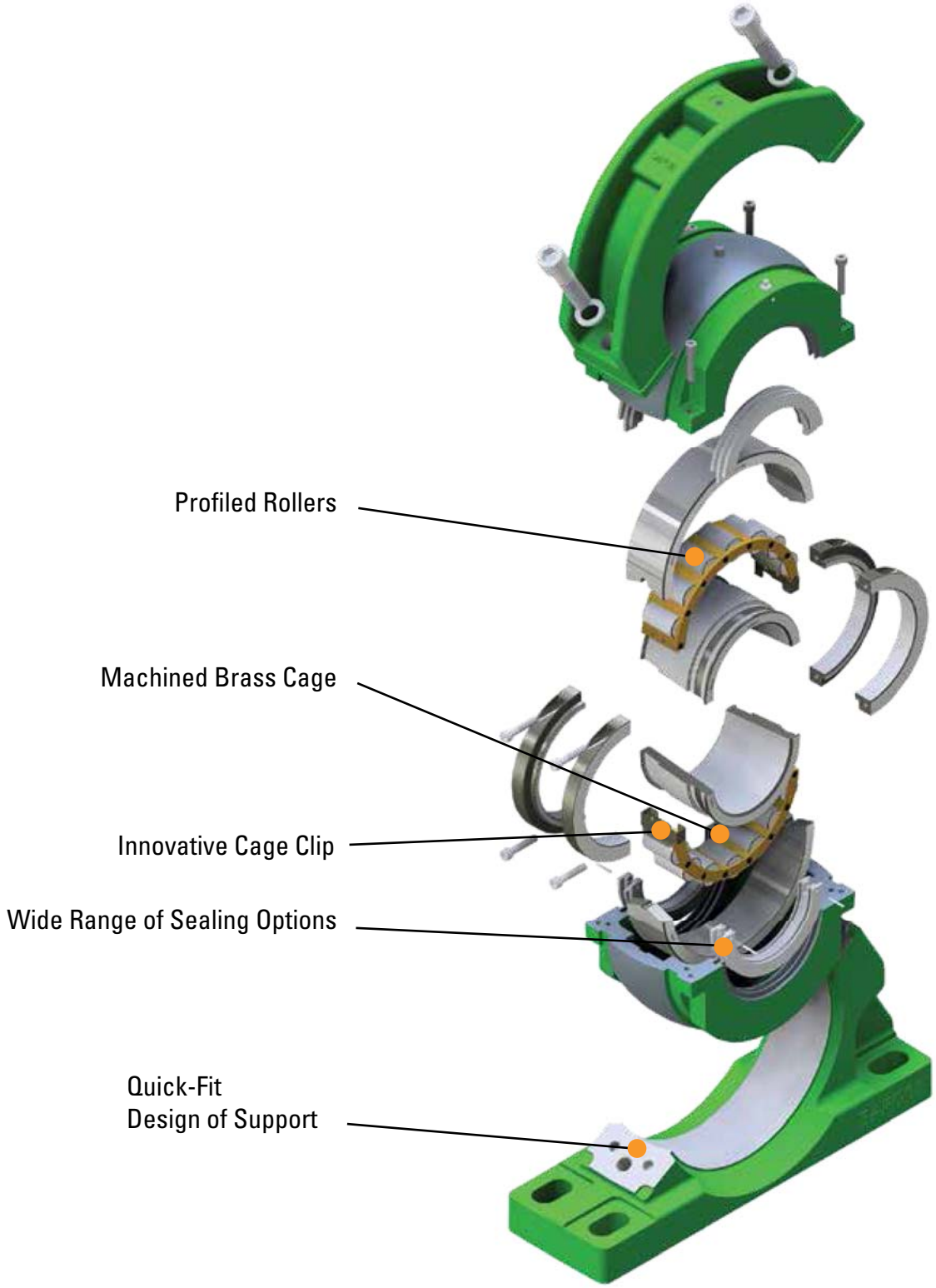

Fig. 2. Technical features.

INDUSTRY APPLICATIONS

TABLE 2. APPLICATIONS

Application	Target Markets													
	Bulk Terminals	Cement & Aggregate	Construction Materials	Food & Beverage	Forest Products & Timber	Grains & Malts	Metals	Marine	Mining & Quarrying	Power Generation	Pulp & Paper	Refining & Petrochem	Sugar	Water Treatment
Ancillary Equipment														
Crankshafts		X					X		X					
Fans & Blowers		X	X	X	X	X	X		X	X	X		X	
Gearboxes & Transmissions	X	X		X	X	X	X		X	X	X		X	
Heat Exchangers										X				
Motors		X					X		X	X	X			
Pumps & Pump Drives		X						X	X	X				X
Mechanical Handling														
Continuous Casters							X							
Conveyors	X	X	X	X	X	X	X		X	X	X		X	
Cooling Beds							X							
Elevators	X	X	X			X							X	
Line Shafting			X				X				X			
Lumber Tables & Stackers					X						X			
Overhead Cranes			X				X				X			
Screw Conveyors		X	X			X				X	X	X		X
Bucket Wheels	X						X		X	X				
Stacker Reclaimers	X						X		X	X				
Process Equipment														
Ball Mill Drives		X	X				X		X	X				
Ball Mill Trunnions		X	X				X		X	X				
Cane Knives & Slicers													X	
Crushers		X	X				X		X	X				
Drum Drier Trunnions		X										X	X	
Dryer Rolls											X			
Kiln & Mill Carrier Rollers		X							X				X	
Kiln & Mill Drives		X										X	X	
Mixer Drives		X	X	X		X					X	X		
Press Rolls			X								X			
Rotary Screens											X			X
Shredders										X	X		X	
Sugar Diffuser Drives													X	
Sugar Diffuser Under Rolls													X	
Washers		X		X					X		X		X	
Other Applications														
Hydro Electric Turbines										X				
Rotary Biological Contactors														X
Mine Winders										X				
Marine Propulsion Shafts								X						
Water Treatment Screens											X			X
Water Treatment Aerators														X

NOMENCLATURE

In order to provide our customers with clear and concise labeling, Timken has endeavored to keep things simple when creating references. The following should cover the majority of ordering situations however, as always, your local Timken engineer will be pleased to provide further assistance if required.

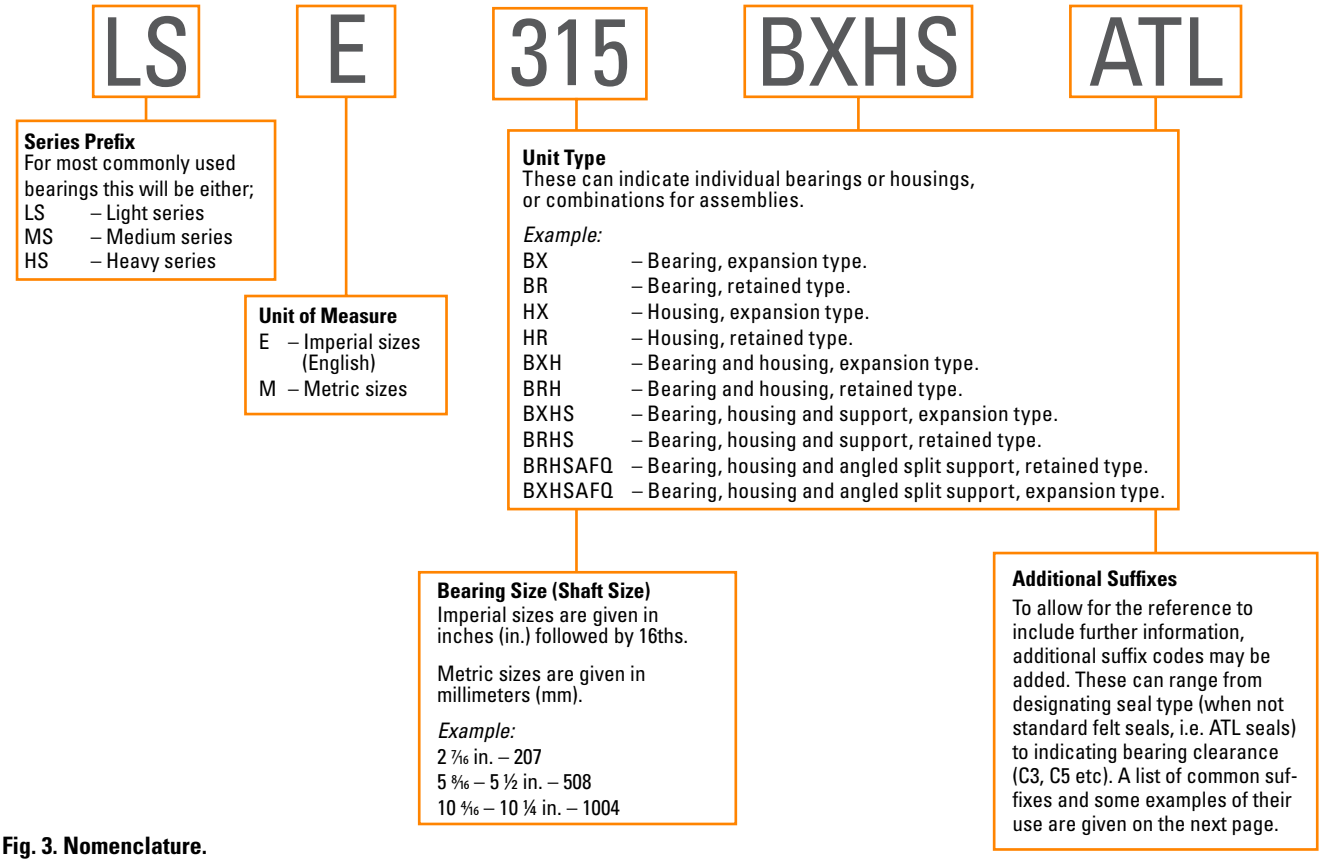

Fig. 3. Nomenclature.
For Triple Labyrinth (ATL) style housings and seals see pages 32-34.

Typical Examples

LSE108BXHATL

Light series 1½ in. bearing with housing and ATL seals.

LSE407BR

Light series 4 7/16 in. bearing retained.

MSE200BXHSATL

Medium series 2 in. expansion bearing with housing and with ATL seals.

LSE700BXHSAFQATL

Light series 7 in. bearing, housing and angled split support retained type with ATL seals .

MSE815BRHSKPS

Medium series 8 15/16 in. bearing, housing and support, retained type with Kevlar® seals.

LSE315BXHSATL

Light series 3 15/16 in. bearing, housing and support, expansion type with ATL seals.

QUICK REFERENCE TABLES

TABLE 3. SERIES PREFIXES

Series Prefixes	
LSE	Light series imperial
LSM	Light series metric
MSE	Medium series imperial
MSM	Medium series metric
HSE	Heavy series imperial
HSM	Heavy series metric
XSE	Tubular strander series imperial
XSM	Tubular strander series metric
CCE	Water cooled series imperial
CCM	Water cooled series metric

TABLE 4. UNIT TYPE REFERENCES

Unit Type References	
BX	Expansion bearing
BR	Retained bearing
HX	Expansion housing
HR	Retained housing
HG	Hanger support
BXH	Expansion bearing with housing
BRH	Retained bearing with housing
BXHG	Expansion bearing with hanger
BXHS	Expansion bearing with housing and support
BRHS	Retained bearing with housing and support
BXHF	Expansion bearing with housing and flange
BRHF	Retained bearing with housing and flange
BXHTT	Expansion bearing with housing and tension type take up
BRHTT	Retained bearing with housing and tension type take up
BXHTP	Expansion bearing with housing and pull type take up
BRHTP	Retained bearing with housing and pull type take up

TABLE 5. ADDITIONAL SUFFIXES

Examples of Additional Suffixes	
F	Axial float
AP	Air purge
ATL	Aluminium triple labyrinth
BEM	Base ends machined
BL	Brass label
BOEC	Bolt-on end cover
C2, C3, C5	Bearing clearance (ISO)
CH	Inner race bore chamfer with size e.g. CH6mm, CH11mm
E0302	Specifications for marine applications
EC	End cover
ECTL	End cover for triple labyrinth bore
ES	Electrical specification
FC	Full compliment of rollers
GE	Grease escape
HTPS	High temperature packing seal
LSR	Laminar seal rings
OB	Overbored with size e.g. OB160mm
OTL	Overbored triple labyrinth seal
RSS	Nitrile single lip seal
S1, S2, S3	Designation for tempered bearings (ISO)
SF0	Swivel fit, zero clearance
SLO	Single lipped outer
SLUB	Spherical lubrication
SNQ	SN angled split
TE	Temperature probe hole
WSRP	Single lip seal with garter spring and retaining plate
XAR	Extended antirotation pin

TABLE 6.

Light Series					
in.	mm	Support	Flange	Take Ups	
1 3/16 to 1 1/2	**35 to 40**	S01	F01	TT01	TP01
1 11/16 to 2	**45 to 50**	S02	F02	TT02	TP02
2 3/16 to 2 1/2	**60 to 65**	S03	F03	TT03	TP03
2 11/16 to 3	**70 to 75**	S04	F04	TT04	TP04
3 3/16 to 3 1/2	**80 to 90**	S05	F05	TT05	TP05
3 11/16 to 4	**100 to 105**	S06	F06	TT06	TP06
4 3/16 to 4 1/2	**110 to 115**	S07	F07	TT07	TP07
4 11/16 to 5	**120 to 130**	S08	F08	TT08	TP08
5 3/16 to 5 1/2	**135 to 140**	S09	F09	TT09	TP09
5 11/16 to 6	**150 to 155**	S10	F10	TT10	TP10
6 7/16 to 6 1/2	**160**	S11	F11	–	–
6 11/16 to 7	**170 to 180**	S12	F12	–	–
7 1/4 to 8	**190 to 200**	S13	F13	–	–
8 1/2 to 9	**220 to 230**	S14	F14	–	–
9 1/2 to 10	**240 to 250**	S15	F15	–	–
10 1/2 to 11	**260 to 280**	S16	F16	–	–
11 1/2 to 12	**300**	S17	–	–	–
12 1/2 to 13	**320 to 330**	S18	–	–	–
14	**340 to 350**	S19	–	–	–
15	**360 to 380**	S20	–	–	–
16	**400**	S21	–	–	–
17	**420**	S22	–	–	–
18	**440 to 460**	S23	–	–	–
19	**480**	S24	–	–	–
20	**500**	S25	–	–	–
21	**530**	S26	–	–	–
22	**560**	S27	–	–	–
23	**580**	S28	–	–	–
24	**600**	S29	–	–	–

TABLE 7.

Medium Series					
in.	mm	Support	Flange	Take Ups	
–	–	–	–	–	–
1 11/16 to 2	**45 to 50**	S03	F03	TT03	TP03
2 3/16 to 2 1/2	**60 to 65**	S04	F04	TT04	TP04
2 11/16 to 3	**70 to 75**	S05	F05	TT05	TP05
3 3/16 to 3 1/2	**80 to 90**	S06	F06	TT06	TP06
3 11/16 to 4	**100 to 105**	S07	F07	TT07	TP07
4 3/16 to 4 1/2	**110 to 115**	S08	F08	TT08	TP08
4 11/16 to 5	**120 to 130**	S10	F10	TT09	TP09
5 3/16 to 5 1/2	**135 to 140**	S30	F30	TT30	TP30
5 11/16 to 6	**150 to 155**	S31	F31	TT31	TP31
6 7/16 to 6 1/2	**160 to 170**	S32	F32	–	–
6 11/16 to 7	**180**	S33	F33	–	–
7 1/4 to 8	**190 to 200**	S34	F34	–	–
8 1/2 to 9	**220 to 230**	S35	F35	–	–
9 1/2 to 10	**240 to 260**	S36	F36	–	–
10 1/2 to 11	**280**	S37	F37	–	–
11 1/2 to 12	**300**	S38	F38	–	–
12 1/2 to 13	**320 to 330**	S39	–	–	–
14	**340 to 360**	S40	–	–	–
15	**380**	S41	–	–	–
16	**400**	S42	–	–	–
17	**420**	S43	–	–	–
18	**440 to 460**	S44	–	–	–
19	**480**	S45	–	–	–
20	**500**	S46	–	–	–
21	**530**	S47	–	–	–
22	**560**	S48	–	–	–
23	**580**	S49	–	–	–
24	**600**	S50	–	–	–

TABLE 8.

Heavy Series			
in.	mm	Support	Flange
–	–	–	–
–	–	–	–
–	–	–	–
–	–	–	–
–	–	–	–
3 11/16 to 4	**100 to 105**	S54	F54
4 3/16 to 4 1/2	**110 to 120**	S55	F55
4 11/16 to 5	**125 to 130**	S56	F56
5 3/16 to 5 1/2	**135 to 140**	S57	F57
5 11/16 to 6	**150 to 155**	S58	F58
6 7/16 to 6 1/2	**160 to 170**	S59	F59
6 11/16 to 7	**180**	S60	F60
7 1/4 to 8	**190 to 200**	S61	F61
8 1/2 to 9	**220 to 230**	S62	F62
9 1/2 to 10	**240 to 260**	S63	F63
11	**280**	S83	F64
12	**300**	S65	F65
13	**320 to 330**	S66	–
14	**340 to 360**	S86	–
15 to 16	**380 to 400**	S68	–
–	–	–	–
17	**420 to 440**	S89	–
18	**460**	S90	–
19	**480**	S94	–
20	**500**	S94	–
21	**530**	S94	–
22	**560**	S94	–
23	**580**	S95	–
24	**600**	S95	–

BEARING TYPES

RETAINED-TYPE BEARINGS (BR)

This bearing has integral flanges on the outer race to provide a surface for axial load. This axial load is accommodated on the inner race via the hardened clamp rings, which both align the inner race halves and provide roller guidance. In larger bearings the inner race is manufactured with integral ribs for roller guidance and axial load.

Fig. 4. Retained-type bearings (BR).

This type of bearing will locate the shaft axially as well as provide a means for taking axial load. The retained outer race must be fixed sideways against one of the housing groove shoulders using the pins and screws provided. Only one retained unit should be mounted on any particular shaft. Additional care should be taken when mounting split cylindrical roller bearing unit on shafts using other, non-split types of bearings (ball, cylindrical and spherical roller, etc.) to ensure there are no other locating bearings used.

EXPANSION-TYPE BEARINGS (BX)

This bearing is designed for radial loads only. As in the retained type bearing, the rollers are guided on the inner race by the hardened shoulders of the clamping rings.

Fig. 5. Expansion-type bearings (BX).

During expansion or contraction of the shaft, rollers are free to move across the outer race offering virtually no resistance to axial movement. Limits for the amount of axial movement are given in the assembly and maintenance section (pages 36-39).

SUPPORT TYPES

Timken bearings and housings may be mounted in a variety of support units according to the application and loading constraints. A number of variants are available as standard types with other unit types available on request. Timken offers a design and manufacturing facility to produce custom units to cover more specialized applications.

PILLOW BLOCK (SUPPORT) TYPE

This is by far the most popular method for mounting Timken units. These supports are manufactured from high strength, ASTM 48A grade 35 cast iron. This, combined with the robust design, provides a stable, rigid base, allowing the split bearing fitted to give optimum performance.

Fig. 6. Pillow block support type.

FLANGE UNITS

In applications where bearings need to be mounted against horizontal or vertical faces, Timken flange units provide a simple means of achieving this goal. Again, the use of ASTM 48A Grade 35 cast iron ensures a durable unit.

Fig. 7. Flange units.

HANGER UNITS

A compact unit commonly used for supporting screw conveyors or similar equipment.

Fig. 8. Hanger units.

TAKE-UP UNITS

These sliding units can be used to effectively tension conveyor and elevator systems. Both pull and push types are available.

Fig. 9. Take-up units.

SERIES COMPARISON

Timken offers a range of bearing series, providing solutions for a wide range of operating conditions. Light Series, Medium Series and Heavy Series offer an increasing ability to accommodate higher loads. As the series increases the speed capability reduces.

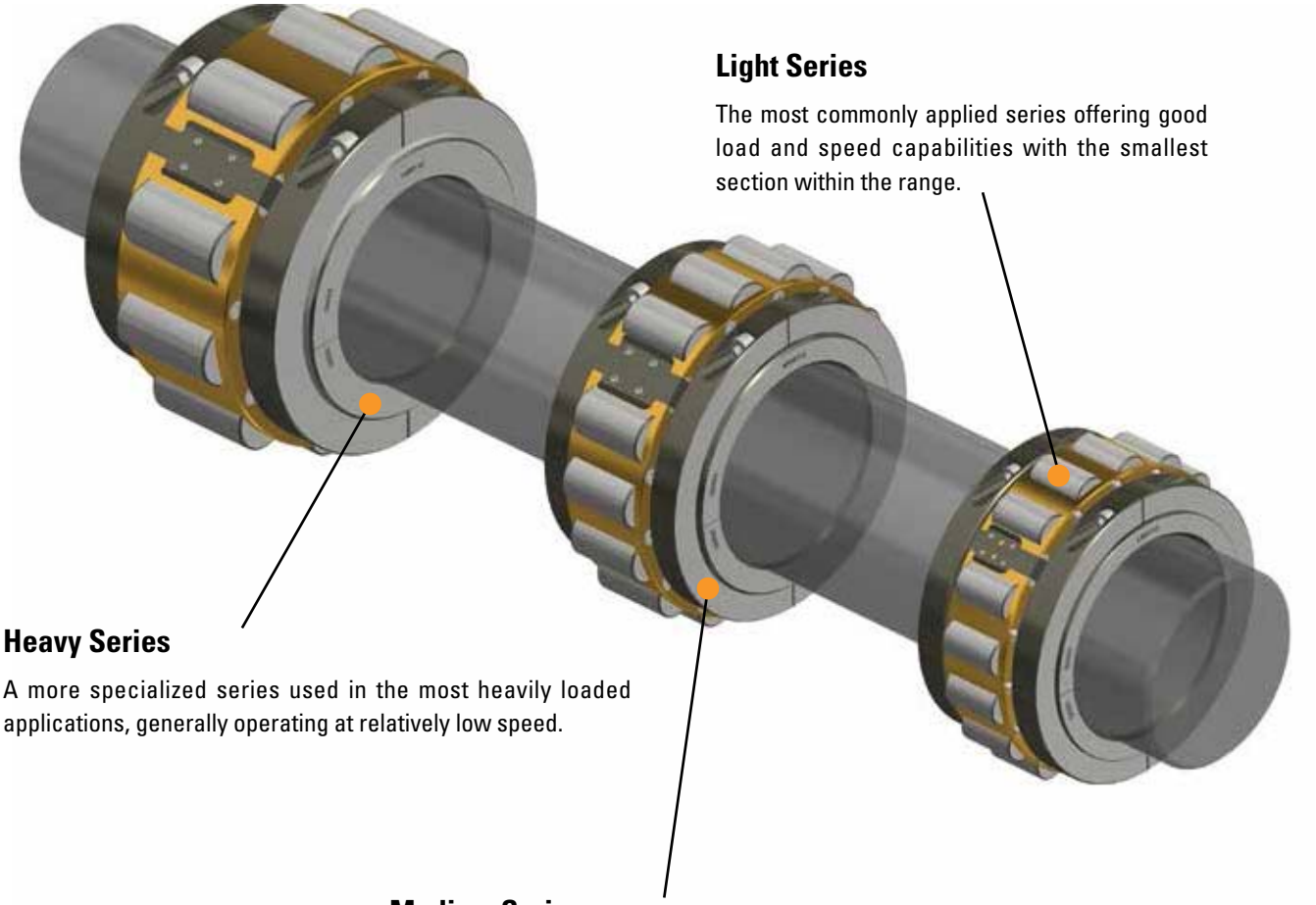

Light Series

The most commonly applied series offering good load and speed capabilities with the smallest section within the range.

Heavy Series

A more specialized series used in the most heavily loaded applications, generally operating at relatively low speed.

Medium Series

An increased section offers additional load carrying capacity. This series is typically used in difficult, heavily loaded applications where shock load and vibration may be present.

Fig. 10. Series comparison.

BEARING SELECTION

DYNAMIC LOADING

Selection of Timken split cylindrical roller bearings must take into account the effects of both radial and axial loads. These loads must be considered independently of each other.

RADIAL LOAD CONSIDERATIONS

The basic rating life of a bearing can be derived from the formula laid down in ISO 281:2007.

$$L_{10} = (C/P)^{10/3} \text{ (Millions of Revolutions)} \quad – (i)$$

In the majority of cases where the speed remains constant then the life can be expressed in hours from the formula.

$$L_{10}h = \frac{(10^6) \times L_{10}}{60 \times n} \quad – (ii)$$

Substituting – (i)

$$L_{10}h = \frac{(10^6) \times}{60 \times n} \left(\frac{C}{P}\right)^{10/3} \quad – (ii)$$

L_{10} = Basic rating life (90 percent reliability), 106 revolutions

$L_{10}h$ = Basic rating life (90 percent reliability), hours

C = Bearing dynamic capacity, kN

N = Speed, min^{-1}

P = Equivalent bearing load

This calculation assumes for the load components considered for an individual bearing, that the shaft system is a beam resting on rigid, movement free supports. Elastic deformations in the bearing, housing or machine structure are not taken into account.

EQUIVALENT LOAD "P"

As previously stated radial and axial loads must be considered separately for split cylindrical roller bearings. For the calculation of theoretical life only radial loads are considered.

F_r = RADIAL LOADS

The value of F_r is that calculated from standard mechanical formula, the impact of additional forces resulting from external influences must also be considered.

TABLE 9.

Load Condition	Factor F_z
Steady	1.0 to 1.3
Light shock or out of balance	1.3 to 2.0
Heavy shock or vibration	2.0 to 3.0

F_z = FACTOR

Under the influence of the above conditions.

$P = F_r \times F_z$

The required theoretical bearing life is based upon a number of factors, including reliability, accessibility and service considerations. Generally life values should be as follows:

TABLE 10.

Guide to Life Values	
Machine used intermittently	500 to 2,000 hours
Occasional use	5,000 to 10,000 hours
Normal operation	20,000 to 50,000 hours
Continuous operation	75,000 to 100,000 hours
High reliability	> 100,000

ADJUSTED LIFE CALCULATION

The L_{10} fatigue life calculation is based upon the rating life of a large number of identical bearings expressed as a number of revolutions operating at a constant speed. This rating life is reached or exceeded by 90 percent of these before the first evidence of fatigue appears.

The above definition applies to bearings operating under optimum conditions. Variations in operating conditions will lead to changes in the life of these bearings.

ISO 281 allows for an adjusted life calculation:

$$Lhna = a_1 \times a_2 \times a_3 \times L_{10}h$$

Where

Lhna = Adjusted life

$L_{10}h$ = Rating life in hours

a_1 = Life adjustment factor, failure probability other than 10 percent

a_2 = Life adjustment factor, material properties

a_3 = Life adjustment factor, operating conditions

a_1 FACTOR

In cases where a failure rate other than 10 percent is required, then an a_1 factor as in the table below should be applied.

TABLE 11.

Adjustment Factor						
Failure Probability %	10	5	4	3	2	1
Factor a_1	1.00	0.62	0.53	0.44	0.33	0.21

a_2 FACTOR

This factor takes into account the material properties.

a_3 FACTOR

The a_3 factor considers all operational parameters that influence fatigue life. The most obvious of these is lubrication. The highest life values are achieved where a state of hydrodynamic lubrication exists, in this state no metal-to-metal contact occurs.

Decreasing effectiveness of lubricant due to decreasing film thickness or effects of contamination will reduce the a_3 factor.

Due to the interrelationships between materials adjustment factor a_2 and operating adjustment factor a_3, a common factor a_{23} is frequently used.

a_{23} FACTOR

$$a_{23} = a_2 + a_3$$

The a_{23} factor can be taken from Fig. 11.

a_{23} Life Adjustment Factor

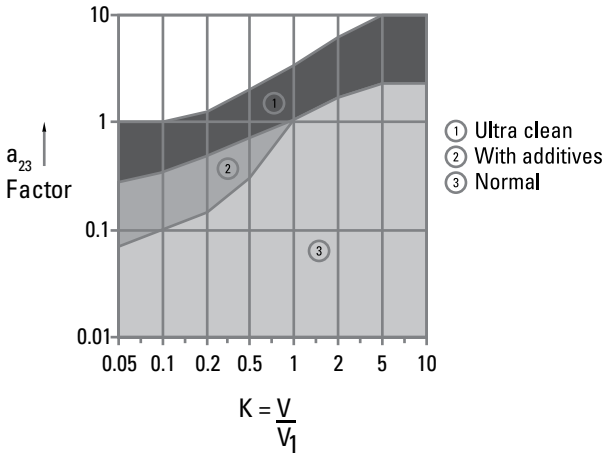

V_1 = Rated viscosity (depends on bearing size and operating speed)

V = Operating viscosity (depends on original viscosity and operating temperature)

Fig. 11. Life adjustment factor.

Values for V and V_1 are obtained from the following graphs:

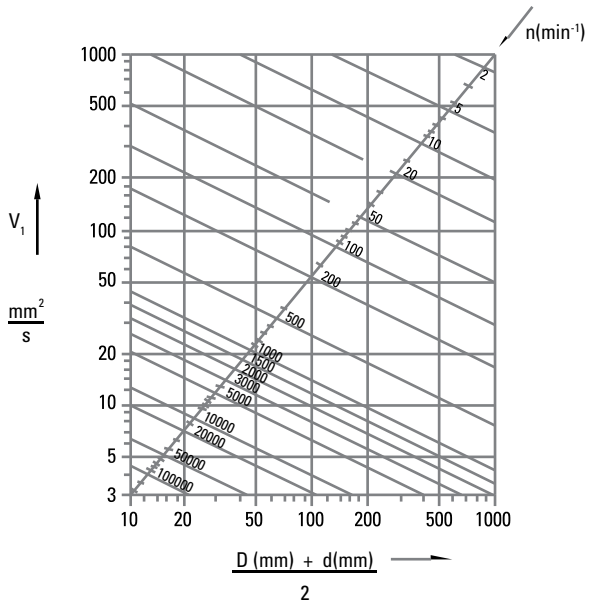

Fig. 12. V and V_1 values.

Where

D = Bearing outside diameter

d = Bearing bore

n = Shaft speed (RPM)

V_1 is then read off the vertical axis.

Using the operating temperature and nominal lubricant viscosity, the value for operating viscosity, V, is read from the horizontal axis.

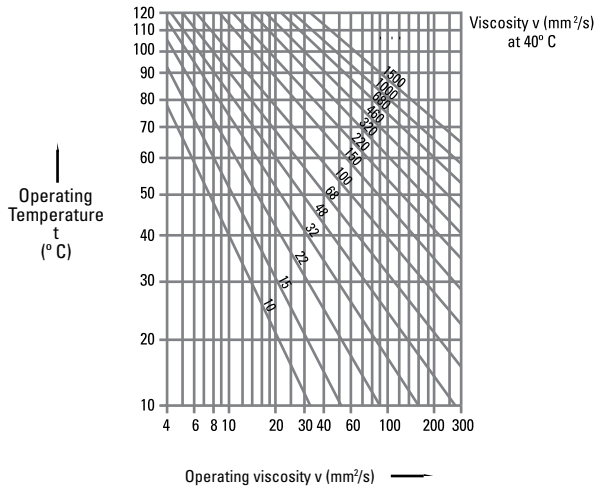

Fig. 13. Operating viscosity.

STATIC LOADING

In situations where bearings rotate slowly (<10 RPM), oscillate slowly, are stationary for prolonged periods or subject to high shock loads, it is important to check that no permanent deformations occur between rolling elements and raceways at peak load.

The basic static load rating is defined in ISO 76:1987 and refers to the contact stress at the centre of the most heavily loaded rolling element/raceway contact area. For roller bearings this value is 4000 Mpa. This will result in a permanent deformation of 0.0001 of the roller diameter.

The required static load rating can be determined from:

Co = Fs x Po

Co = Basic static load rating
Po = Equivalent static load
Fs = Static safety factor

Guidelines for the static safety factor Fs can be found in the table below:

TABLE 12.

Nature of Duty	Requirements for Duty		
	Low	Medium	High
Smooth, no vibration	1.0	1.5	3.0
Normal	1.0	1.5	3.5
Heavy	>2.5	>3.0	>4.0

BEARING RATINGS

TABLE 13. LIGHT SERIES

Shaft (d)		Bearing Ratings			
		Dynamic C_r	Static C_{or}	Axial C_a	Max
mm	in.	**kN** lb.	**kN** lb.	**kN** lb.	RPM
35 **40**	1 3/16 1 1/2	**65** 14613	**68** 15287	**3.20** 719.38	5400
45 **50**	1 11/16 2	**83** 18659	**87** 19558	**3.60** 809.30	4630
55 **65**	2 3/16 2 1/2	**103** 23155	**115** 25853	**5.40** 1213.95	3940
70 **75**	2 11/16 3	**138** 31024	**161** 36194	**7.60** 1708.53	3310
80 **90**	3 3/16 3 1/2	**187** 42039	**231** 51931	**12.40** 2787.59	2790
100 **105**	3 11/16 4	**288** 64745	**366** 82280	**16.00** 3596.90	2340
110 **115**	4 3/16 4 1/2	**316** 71040	**427** 95993	**18.60** 4181.39	1970
120 **130**	4 11/16 5	**363** 81606	**496** 111505	**22.20** 4990.69	1740
135 **140**	5 3/16 5 1/2	**422** 94869	**585** 131513	**25.80** 5799.99	1570
150 **155**	5 11/16 6	**459** 103187	**664** 149273	**29.40** 6609.30	1450
160	6 7/16 6 1/2	**538** 120947	**792** 178049	**33.00** 7419	1320
170 **180**	6 11/16 7	**524** 117800	**828** 186142	**36.40** 8183	1220
190 **200**	7 1/4 8	**614** 138033	**990** 222561	**41.00** 9217	1070
220 **230**	8 1/2 9	**708** 159165	**1168** 262577	**49.00** 11016	930
240 **250**	9 1/2 10	**744** 167258	**1289** 289779	**57.80** 12994	820
260 **280**	10 1/2 11	**848** 190638	**1502** 337663	**66.80** 15017	730
300 **305**	11 1/2 12	**929** 208848	**1665** 374307	**78.20** 17580	650
320 **330**	12 1/2 13	**920** 206824	**1674** 376330	**89.00** 20008	590
340 **350**	14	**1022** 229755	**1965** 441745	**99.60** 22391	540
360 **380**	15	**1224** 275166	**2431** 546511	**110.40** 24819	500
400	16	**1107** 248864	**2266** 509417	**115.60** 25988	460
420	17	**1146** 257631	**2418** 543588	**121.00** 27202	430
440 **460**	18	**1185** 266399	**2469** 555053	**127.20** 28596	410
480	19	**1348** 303042	**2965** 666559	**132.60** 29810	380
500	20	**1392** 312934	**3139** 705675	**137.80** 30979	360
530	21	**1431** 321702	**3316** 745466	**140.60** 31608	340
560	22	**1472** 330919	**3490** 784583	**142.40** 32013	330
580	23	**1616** 363291	**3841** 863491	**144.00** 32372	310
600	24	**1660** 373183	**4033** 906654	**146.80** 33002	300

TABLE 14. MEDIUM SERIES

Shaft (d)		Bearing Ratings			
		Dynamic C_r	Static C_{or}	Axial C_a	Max
mm	in.	**kN** lb.	**kN** lb.	**kN** lb.	RPM
–	–	–	–	–	–
45 **50**	1 11/16 2	**121** 27202	**127** 28551	**6.20** 1394	4350
55 **65**	2 3/16 2 1/2	**168** 37768	**190** 42714	**8.80** 1978	3680
70 **75**	2 11/16 3	**258** 58001	**300** 67443	**10.60** 2383	3080
80 **90**	3 3/16 3 1/2	**297** 66768	**353** 79358	**17.80** 4002	2520
100 **105**	3 11/16 4	**388** 87226	**491** 110381	**25.00** 5620	2130
110 **115**	4 3/16 4 1/2	**454** 102063	**592** 133087	**31.20** 7014	1820
120 **130**	4 11/16 5	**525** 102063	**700** 133087	**38.20** 7014	1600
135 **140**	5 3/16 5 1/2	**600** 134885	**817** 183669	**45.40** 10206	1450
150 **155**	5 11/16 6	**730** 164111	**1034** 232453	**52.40** 11780	1320
160 **170**	6 7/16 6 1/2	**842** 189289	**1175** 264151	**61.40** 13803	1200
180	6 11/16 7	**927** 208398	**1357** 305066	**71.20** 16006	1120
190 **200**	7 1/4 8	**1013** 227732	**1516** 340810	**80.00** 17985	960
220 **230**	8 1/2 9	**1138** 255833	**1668** 374981	**89.80** 20188	850
240 **260**	9 1/2 10	**1354** 304391	**2117** 475921	**98.80** 22211	750
270 **280**	10 1/2 11	**1476** 331818	**2357** 529875	**113.80** 25583	670
300 **305**	11 1/2 12	**1587** 356772	**2644** 594395	**129.00** 29000	610
320 **330**	12 1/2 13	**1723** 387346	**2922** 656892	**144.20** 32417	550
340 **360**	14	**2029** 456137	**3403** 765025	**159.20** 35790	500
380	15	**1931** 434106	**3522** 791777	**174.40** 39207	460
400	16	**2105** 473223	**3793** 852701	**188.40** 42354	430
420	17	**2324** 522456	**4164** 936105	**202.00** 45411	400
440 **460**	18	**2215** 497952	**4183** 940376	**216.00** 48559	380
480	19	**2445** 549658	**4594** 1032773	**230.00** 51706	360
500	20	**2453** 551456	**4923** 1106734	**244.00** 54853	340
530	21	**2702** 607434	**5415** 1217340	**258.00** 58001	330
560	22	**2851** 640930	**5740** 1290403	**272.00** 61148	310
580	23	**2982** 670380	**6173** 1387746	**286.00** 64295	300
600	24	**2972** 668132	**6185** 1390443	**300.00** 67443	290

Axial load ratings (C_a) assume the use of EP additives or oil lubrication, otherwise use 50 percent of values.
Higher loads and speeds may be permissible. Please contact a Timken engineer for more information.

TABLE 15. HEAVY SERIES

Shaft (d)		Bearing Ratings			
		Dynamic C_r	Static C_{or}	Axial C_a	Max
mm	in.	**kN** lb.	**kN** lb.	**kN** lb.	RPM
–	–	–	–	–	–
–	–	–	–	–	–
–	–	–	–	–	–
–	–	–	–	–	–
–	–	–	–	–	–
100 **105**	3 11/16 4	**653** 146800	**783** 176025	**31.20** 7014	1820
110 **120**	4 3/16 4 1/2	**656** 147475	**801** 180072	**39.10** 8790	1640
125 **130**	4 11/16 5	**753** 169281	**974** 218964	**49.00** 11016	1500
135 **140**	5 3/16 5 1/2	**928** 208623	**1265** 284383	**58.80** 13219	1340
150 **155**	5 11/16 6	**1037** 233127	**1325** 297872	**69.40** 15602	1220
160 **170**	6 7/16 6 1/2	**1196** 268871	**1576** 354299	**79.20** 17805	1110
175 **180**	6 11/16 7	**1330** 298996	**1867** 419718	**89.00** 20008	1030
190 **200**	7 1/4 8	**1597** 359020	**2285** 513688	**99.60** 22391	880
220 **230**	8 1/2 9	**1665** 374307	**2455** 551906	**109.40** 24594	760
240 **260**	9 1/2 10	**1896** 426238	**2789** 626992	**130.80** 29405	700
280	11	**2202** 495029	**3507** 788405	**153.00** 34396	620
300	12	**2337** 525379	**3650** 820553	**174.40** 39207	560
320	13	**2718** 611031	**4093** 920143	**198.80** 44692	500
340 **360**	14	**2935** 659814	**4973** 1117975	**213.60** 48019	460
380 **400**	15 16	**3195** 718265	**5238** 1177550	**250.80** 56382	420
–	–	–	–	–	–
420 **440**	17	**3582** 805266	**6377** 1433607	**275.80** 62002	360
460	18	**3807** 855848	**6611** 1486212	**302.40** 67982	340
–	–	–	–	–	–
500 **530**	20 21	**4660** 1047610	**8183** 1839612	**347.00** 78009	310
–	–	–	–	–	–
560	22	**4795** 1077959	**9412** 2115902	**382.60** 86012	280
580 **600**	23 24	**4951** 1113029	**9451** 2124669	**400** 89924	270

Axial load ratings (C_a) assume the use of EP additives or oil lubrication, otherwise use 50 percent of values.
Higher loads and speeds may be permissible. Please contact a Timken engineer for more information.

AXIAL CONSIDERATIONS

AXIAL LOAD

Bearing selection, on an axial load basis, must be considered independently from the radial load.

1. Calculate the axial loads acting on the bearing.
2. Multiply each load by the appropriate dynamic factor fz.
3. Combine these loads to determine the effective axial load P_a.
4. Select a bearing having a C_a value greater than the product of P_a x fdn, d.n is the product of the shaft size in millimeter and the speed in RPM. To determine fdn use the velocity graph below.

AXIAL RATINGS C_a

These ratings are for constant loads with oil or extra pressure greases. If greases without extra pressure additives are applied then the catalog rating must be decreased by 50 percent. In instances where bearings operate at over 50 percent of their catalog speed rating and over 50 percent of their axial load ratings (C_a) then recessed shafts should be considered. Please contact a Timken engineer for assistance.

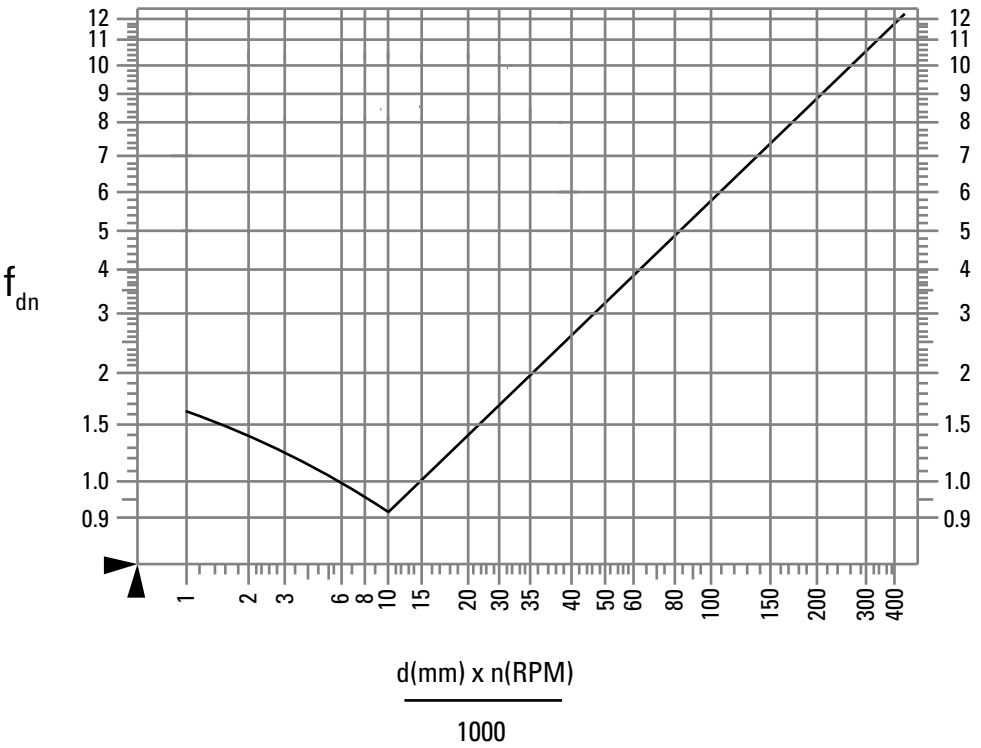

VELOCITY
Applies only to axial loads on br retained bearings.
Bearing bore = d
Bearing RPM = n

Fig. 14. Velocity graph.

BEARING CLEARANCE AND TEMPERATURE CONSIDERATIONS

Timken bearings are manufactured to give an ISO CN clearance as standard. At specific customer request, bearings may be produced with any clearance to suit a particular application. When assessing the requirement for special clearances, it is particularly important to consider the differential temperature between shaft and housing. It also should be noted that an increase in bearing clearance will lead to a small reduction in bearing capacity. For example, typically a C_3 clearance will reduce capacity by 5 percent and C_5 clearance by 10 percent.

Timken bearings also can be produced as C_2. This clearance is smaller than CN and is typically used in applications involving shock or reciprocating loads.

Cleanliness of component parts when fitting will have a direct impact on the running clearance of the bearing. This is of particular importance when fitting new bearings into existing cast iron or refitting bearings after maintenance. Special care must be taken to remove build-ups of aged grease and other contaminants in order to avoid reducing the bearing clearance when fitted.

When selecting bearings for use at elevated temperatures, consideration also should be given to the bearings' dimensional stability. Timken bearings are tempered to give stability up to 140° C (284° F). In order to operate at higher temperatures, bearings must be specially heat-treated. This process will lead to a reduction in capacity as a result of the reduced hardness.

The designations for specially heat-treated bearings are in line with those quoted in ISO standards. The effects of temperature stabilization are detailed in the table shown.

TABLE 16.

Operating Temperature	200° C 392° F	250° C 482° F	300° C 572° F
Designation	S1	S2	S3
Reduction in Capacity	10%	25%	40%

SUPPORT LOADS AND BEARING FREQUENCIES

Throughout the Timken range, the split cylindrical roller bearing supports have been designed to provide a rigid and stable base to enable the associated bearing to operate to its full potential. With this in mind, all types of Timken split cylindrical roller bearing housings and supports are manufactured from ASTM 48A – Grade 35 cast iron as a minimum and include strengthening webs and ribs to provide a highly robust unit. In order to complement the inherent strength, we recommend that careful consideration be given to the siting and mounting of the support unit.

To determine a support's suitability, one should consider the resultant effective load derived in the bearing selection process and the direction of that load. The diagram shown indicates the area in which the full C_{or} rating of the bearing may be applied. Should the direction of the applied load be outside this area it may be necessary to consider alternative designs or materials. Timken has a proven track record of innovative solutions and would be happy to provide assistance.

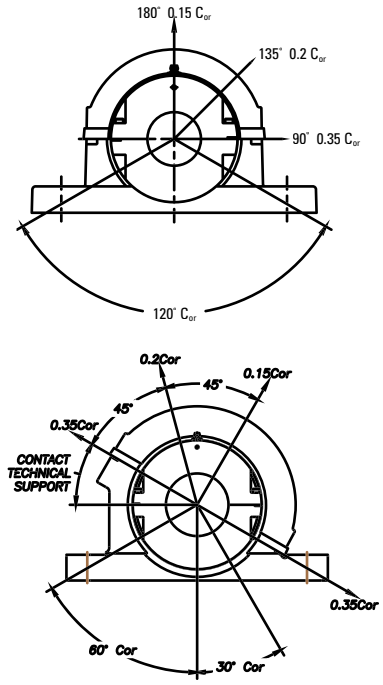

Fig. 15. C_{or} rating application.

Condition monitoring is the collection, storage, comparison and evaluation of data taken to establish the running condition of a machine. The data can be made up of several parameters, for example, electric current, pressure, brush wear, vibration and temperature, to name a few. Vibration analysis is the area of condition monitoring concerned with evaluating and identifying the source of vibration within a system and assessing its severity and hence proposing the required maintenance action.

The individual components of any bearing will exhibit frequency characteristics which will identify it within a system subject to vibration analysis. For Timken bearings these characteristic frequencies are detailed in the tables opposite. The values given are for a nominal speed of 1 RPM. To obtain the correct frequency required for vibration analysis software, multiply by the speed of rotation in RPM.

For further information on condition monitoring services Please contact a Timken engineer.

BEARING FREQUENCY TABLES (HZ)

TABLE 17. LIGHT SERIES

		Inner Race	Outer Race	Roller	Cage
mm	in.	hz	hz	hz	hz
35 **40**	1 3/16 1 1/2	5.878	4.122	2.760	0.412
45 **50**	1 11/16 2	5.852	4.148	2.847	0.415
60 **65**	2 3/16 2 1/2	6.932	5.068	3.140	0.422
70 **75**	2 11/16 3	6.902	5.098	3.252	0.425
80 **90**	3 3/16 3 1/2	8.017	5.983	3.370	0.427
100 **105**	3 11/16 4	8.089	5.911	3.137	0.422
110 **115**	4 3/16 4 1/2	9.109	6.891	3.538	0.431
120 **130**	4 11/16 5	9.100	6.900	3.569	0.431
135 **140**	5 3/16 5 1/2	9.087	6.913	3.612	0.432
150 **155**	5 11/16 6	10.159	7.841	3.819	0.436
160	6 7/16 6 1/2	10.162	7.838	3.809	0.435
170 **180**	6 11/16 7	12.223	9.777	4.442	0.444
190 **200**	7 1/4 8	12.204	9.796	4.515	0.445
220 **230**	8 1/2 9	12.171	9.829	4.645	0.447
240 **250**	9 1/2 10	13.154	10.846	5.152	0.452
260 **280**	10 1/2 11	13.118	10.882	5.319	0.453
300 **305**	11 1/2 12	13.087	10.913	5.472	0.455
320 **330**	12 1/2 13	13.028	10.972	5.795	0.457
340 **350**	14	15.125	12.875	6.182	0.460
360 **380**	15	16.133	13.867	6.580	0.462
400	16	17.150	14.850	6.92	0.464
420	17	18.156	15.844	7.319	0.466
440 **460**	18	19.165	16.835	7.694	0.468
480	19	19.166	16.834	7.684	0.468
500	20	20.177	17.823	8.038	0.469
530	21	21.175	18.825	8.479	0.471
560	22	22.184	19.816	8.841	0.472
580	23	23.254	20.746	8.744	0.472
600	24	23.208	20.792	9.078	0.473

TABLE 18. MEDIUM SERIES

		Inner Race	Outer Race	Roller	Cage
mm	in.	hz	hz	hz	hz
–	–	–	–	–	–
45 **50**	1 11/16 2	5.988	4.012	2.432	0.401
60 **65**	2 3/16 2 1/2	7.091	4.909	2.659	0.409
70 **75**	2 11/16 3	7.153	4.847	2.506	0.404
80 **90**	3 3/16 3 1/2	7.091	4.909	2.659	0.409
100 **105**	3 11/16 4	8.205	5.795	2.818	0.414
110 **115**	4 3/16 4 1/2	8.143	5.857	2.981	0.418
120 **130**	4 11/16 5	8.105	5.895	3.088	0.421
135 **140**	5 3/16 5 1/2	8.082	5.918	3.157	0.423
150 **155**	5 11/16 6	9.225	6.775	3.188	0.423
160 **170**	6 7/16 6 1/2	8.107	5.893	3.083	0.421
180	6 11/16 7	9.192	6.808	3.281	0.425
190 **200**	7 1/4 8	9.119	6.881	3.505	0.430
220 **230**	8 1/2 9	9.161	6.839	3.372	0.427
240 **260**	9 1/2 10	10.218	7.782	3.628	0.432
270 **280**	10 1/2 11	10.162	7.838	3.808	0.435
300 **305**	11 1/2 12	11.207	8.793	4.082	0.440
320 **330**	12 1/2 13	12.287	9.713	4.217	0.442
340 **360**	14	11.202	8.798	4.100	0.440
380	15	12.141	9.859	4.769	0.448
400	16	12.169	9.831	4.651	0.447
420	17	12.195	9.805	4.548	0.446
440 **460**	18	14.257	11.743	5.122	0.452
480	19	14.273	11.727	5.057	0.451
500	20	15.265	12.735	5.489	0.455
530	21	15.249	12.751	5.559	0.455
560	22	15.241	12.759	5.597	0.456
580	23	16.277	13.723	5.831	0.457
600	24	16.252	13.748	5.951	0.458

The above figures are unitary values. For the appropriate frequency, multiply by application RPM.

TABLE 19. HEAVY SERIES

		Inner Race	Outer Race	Roller	Cage
mm	in.	hz	hz	hz	hz
–	–	–	–	–	–
–	–	–	–	–	–
–	–	–	–	–	–
–	–	–	–	–	–
–	–	–	–	–	–
100 **105**	3 11/16 4	6.073	3.927	2.222	0.393
110 **120**	4 3/16 4 1/2	5.983	4.017	2.446	0.402
125 **130**	4 11/16 5	7.114	4.886	2.601	0.407
135 **140**	5 3/16 5 1/2	8.259	5.741	2.690	0.410
150 **155**	5 11/16 6	7.190	4.810	2.422	0.401
160 **170**	6 7/16 6 1/2	7.159	4.841	2.491	0.403
175 **180**	6 11/16 7	8.243	5.757	2.727	0.411
190 **200**	7 1/4 8	8.221	5.779	2.779	0.413
220 **230**	8 1/2 9	8.102	5.898	3.097	0.421
240 **260**	9 1/2 10	8.131	5.869	3.013	0.419
280	11	9.197	6.803	3.267	0.425
300	12	9.192	6.808	3.280	0.425
320	13	9.246	6.754	3.132	0.422
340 **360**	14	10.224	7.776	3.609	0.432
380 **400**	15 16	10.250	7.750	3.530	0.431
420 **440**	17	11.263	8.737	3.895	0.437
460	18	10.170	7.830	3.781	0.435
–	–	–	–	–	–
500 **530**	20 21	10.172	7.828	3.773	0.435
560	22	12.174	9.826	4.630	0.447
580 **600**	23 24	12.240	9.760	4.378	0.444

The above figures are unitary values. For the appropriate frequency, multiply by application RPM.

SHAFT CONSIDERATIONS

It is essential that the shaft on to which the bearing is to be mounted has been produced to the correct size and tolerance for the operating conditions. If replacing a bearing in an existing system, the shaft must be checked to establish if any wear or damage has taken place. The table below may be followed for both the manufacture of new shafts and the inspection of existing shafts.

TABLE 20. SHAFT CONSIDERATIONS

Shaft Dia.	dn<50000 & C/P>10	50000<dn<150000 & C/P>10	50000<dn<150000 & C/P<10	dn>150000	Cylindricity of Shaft
Over - Incl.	h9	h8	h7	h6	IT6
mm in.	**mm** in.	**mm** in.	**mm** in.	**mm** in.	**mm** in.
0 - 50 0 - 2	**-62** -2.5	**-39** -1.5	**-25** -1	**-16** -0.6	**-16** -0.6
50 - 80 2 - 3	**-74** -3	**-46** -1.8	**-30** -1.2	**-19** -0.7	**-19** -0.7
80 - 120 3 - 5	**-87** -3.5	**-54** -2.1	**-35** -1.4	**-22** -0.9	**-22** -0.9
120 - 180 5 - 7	**-100** -3.9	**-63** -2.5	**-40** -1.6	**-25** -1	**-25** -1
180 - 250 7 - 10	**-115** -4.5	**-72** -2.8	**-46** -1.8	**-29** -1.2	**-29** -1.2
250 - 315 10 - 12 ½	**-130** -5.1	**-81** -3.2	**-52** -2	**-32** -1.3	**-32** -1.3
315 - 400 12½ - 15 ½	**-140** -5.5	**-89** -3.5	**-57** -2.2	**-36** -1.4	**-36** -1.4
400 - 500 15½ - 19 ½	**-155** -6.1	**-97** -3.8	**-63** -2.5	**-40** -1.6	**-40** -1.6
19½ - 24" **500 - 600 mm**	**-175** -6.9	**-110** -4.3	**-70** -2.8	**-44** -1.7	**-44** -1.7

dn value = shaft size (mm) x RPM
C = Bearing dynamic capacity (kN)
P = Equivalent bearing load

RECESS MOUNTING

In applications where the resultant axial load exceeds 50 percent of the C_a rating for the bearing, the shaft design should include either a recess for bearing seating or grooves to accommodate retaining rings. Such an arrangement should also be considered if the unit is subjected to shock loads, fluctuations in temperature over 100° C (212° F) or the shaft is vertical.

The dimensions for producing an appropriate recess or for governing the position and size of the retaining rings if used are derived from table 21.

TABLE 21. RECESS MOUNTING

Journal Diameter d	Shoulder Diameter D	Fillet Radii	Shoulder Height B	Recess Width R	Squareness of Abutment Faces
mm in.	**mm** in.	**mm** in.	**mm** in.	**mm** in.	**mm** in.
40 - 90 1 ½- 3 ½	**d + 5** d + ¼	**1.2** 3⁄64	**2.5** ⅛	**C + 0.1** **C + 0.3** C + 0.004 C + 0.012	**0.1** 0.004
Over 90 - 150 Over 3 ½ - 6	**d + 10** d + ⅜	**2.0** 5⁄64	**5.0** 3⁄16	**C + 0.15** **C + 0.40** C + 0.006 C + 0.016	**0.1** 0.004
Over 155 Over 6	**d + 10** d + ⅜	**2.3** 3⁄32	**5.0** **3⁄16**	**C + 0.2** **C + 0.5** C + 0.008 C + 0.02	**0.1** 0.004

N.B. Width of recesses for standard bearings maybe different from that used for existing products. Please consult a Timken engineer for bearings suitable for other recess sizes.

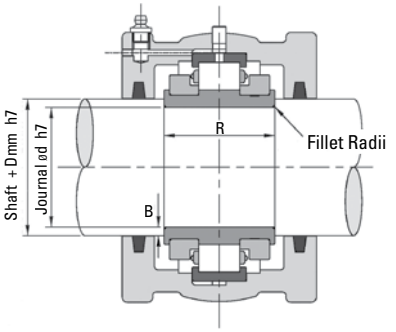

Fig. 16. Recess Mounting.

SEALING ARRANGEMENTS

Any bearing, housing and support unit that is not suitably sealed against its surrounding environment is unlikely to achieve its full potential, either in terms of performance or life span. The prevention of ingress of foreign materials and contaminants is paramount and should be considered as early in the selection process as possible.

A wide variety of sealing solutions are available to users of Timken products as off-the-shelf arrangements. This range will cover the vast majority of operating environments found throughout all industries. To cover those situations where a proprietary arrangement is not suitable, Timken is able to work closely with designers and end users to develop and manufacture custom solutions tailored to specific applications.

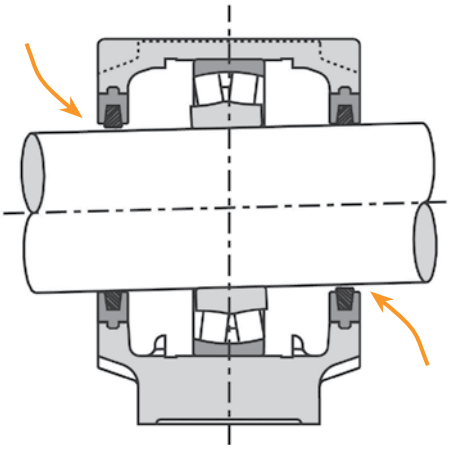

Fig. 17. Seal ineffective.

Fig. 18. Steel industry applications are ideal for Timken Split Cylindrical Roller Bearing Housed Unit.

Timken units have inherent advantages over traditional solid bearing arrangements when considering sealing. The spherical location between housing and support ensures that whichever type of seal is used, it will always remain concentric to the shaft.

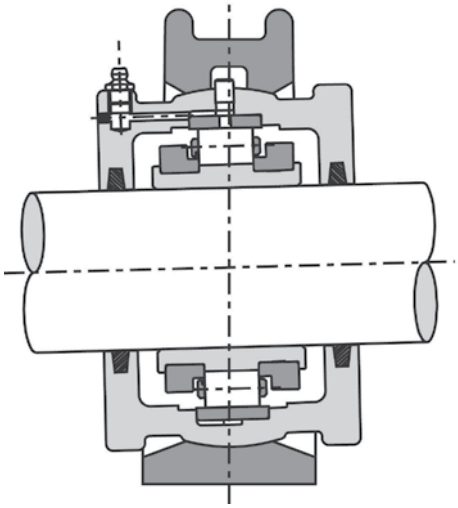

Fig. 19. Seal remains concentric.

Fig. 20. Timken Split Cylindrical Roller Bearing Housed Unit is shown here in a steel industry application.

ALUMINIUM TRIPLE LABYRINTH

A precision machined, non-contacting seal suitable for both high speed and general applications. Once fitted the seal revolves with the shaft. The seal grips the shaft via two split O-rings fitted to the bore of the seal. Timken triple labyrinth seals are fitted with high-temperature Viton cord as standard.

Max. Speed	As Bearing
Temp. Range	-20° C to +175° C (-4° F to + 347° F)
Shaft Finish	3.2µm Ra
Suffix Letters	**ATL**

Fig. 21. Aluminium Triple Labyrinth.

KEVLAR® PACKING SEAL

This recent addition to the sealing range has proved highly effective in areas having the potential for fine particle contaminants such as cement or ash. Please consult a Timken engineer for more information.

Max. Speed	As bearing
Temp. Range	-100° C to +280° C (-148° F to + 536° F)
Shaft Finish	1.6µm Ra
Suffix Letters	**KPS**

Fig. 22. Kevlar Packing Seal.

VITON SINGLE LIP

For environments involving moderate liquid splashing but not submersion. Should be avoided where abrasive particles are also present as this can lead to shaft wear in the seal area.

Max. Speed	dN(mm)<150000
Temp. Range	-34° C to +204° C (-30° F to + 400° F)
Shaft Finish	3.2µm Ra
Suffix Letters	**RSS**

Note: d = shaft diameter, N = RPM

Fig. 23. Viton Single Lip.

HIGH-TEMPERATURE PACKING

A self-lubricating high temperature packing seal based around PTFE and graphite.

Max. Speed	dN(mm)<150000
Temp. Range	-60° C to + 300° C (-76° F to + 572° F)
Shaft Finish	1.2µm Ra
Suffix Letters	**HTPS**

Note: d = shaft diameter, N = RPM

Fig. 24. High-Temperature Packing.

FELT SEAL

This type of seal is supplied as standard with all Timken housings up to a bore size of 12 inch. Consisting of felt strips made from blended fibers. Seals are supplied dry and need to be soaked in oil prior to fitting.

Max. Speed	dN(mm)<150000
Temp. Range	-60° C to +100° C (-76° F to +212° F)
Shaft Finish	1.6µm Ra

Note: d = shaft diameter, N = RPM

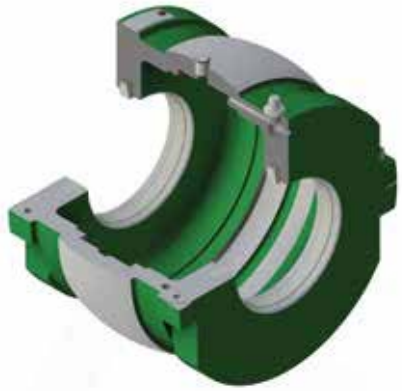

Fig. 25. Felt Seal.

SINGLE-LIP WITH GARTER SPRING AND RETAINING PLATE

A more specialized seal for very wet environments with heavy splash. This type of seal is not suitable for continuous submersion without due consideration being given to sealing of the housing joint and any other possible points of liquid entry. Please consult a Timken engineer for more information.

Max. Speed	dN(mm)<150000
Temp. Range	-20° C to +100° C (-4° F to + 212° F)
Shaft Finish	0.8µm Ra
Suffix Letters	**WSRP**

Note: d = shaft diameter, N = RPM

Fig. 26. Single-Lip with Garter Spring and Retaining Plate.

LABYRINTH GREASE GROOVE

For shaft sizes over 12 in., housings are supplied with a close-fitting labyrinth groove machined into the housing. No additional seal is added. For harsh environments, alternative sealing arrangements are available.

Max. Speed	As Bearing
Temp. Range	As Bearing
Shaft Finish	3.2µm Ra
Suffix Letters	**LAB**

Fig. 27. Labyrinth Grease Groove.

COMBINATION SEAL

This seal combines a labyrinth grease seal with grease purge and the strip seal of your choice (felt, RSS, HTPS or KPS). This combination is ideal for harsh environments with high levels of contamination. Only available for shaft sizes above 12 inches.

Max. Speed	As per the chosen strip seal type.
Temp. Range	As per the chosen strip seal type.
Shaft Finish	1.6µm Ra
Suffix Letters	**LABLUB**

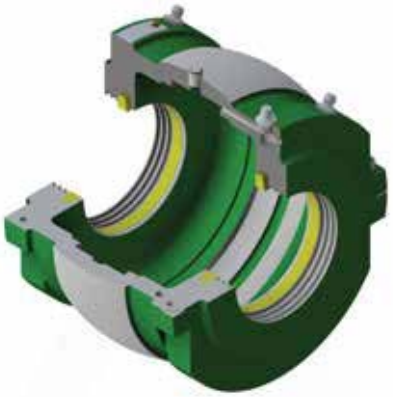

Fig. 28. Combination Seal.

TRIPLE LABYRINTH HOUSING AND SEAL REFERENCES

TABLE 22. LIGHT SERIES

Shaft (d)		Triple Labyrinth Seal Reference		Housing Reference
				Retained Expansion
mm	in.	**mm**	in.	
35 **40**	1 3/16 1 1/4 1 7/16 1 1/2	**35MMATL** **40MMATL**	103ATL 104ATL 107ATL 108ATL	LS1HRTL LS1HXTL
45 **50**	1 11/16 1 3/4 1 15/16 2	**45MMATL** **50MMATL**	111ATL 112ATL 115ATL 200ATL	LS2HRTL LS2HXTL
55 **60** **65**	2 3/16 2 1/4 2 7/16 2 1/2	**55MMATL** **60MMATL** **65MMATL**	203ATL 204ATL 207ATL 208ATL	LS3HRTL LS3HXTL
70 **75**	2 11/16 2 3/4 2 15/16 3	**70MMATL** **75MMATL**	211ATL 212ATL 215ATL 300ATL	LS4HRTL LS4HXTL
80 **85** **90**	3 3/16 3 1/4 3 7/16 3 1/2	**80MMATL** **85MMATL** **90MMATL**	303ATL 304ATL 307ATL 308ATL	LS5HRTL LS5HXTL
100 **105**	3 11/16 3 3/4 3 15/16 4	**100MMATL** **105MMATL**	311ATL 312ATL 315ATL 400ATL	LS6HRTL LS6HXTL
110 **115**	4 3/16 4 1/4 4 7/16 4 1/2	**110MMATL** **115MMATL**	403ATL 404ATL 407ATL 408ATL	LS7HRTL LS7HXTL
120 **125** **130**	4 11/16 4 3/4 4 15/16 5	**120MMATL** **125MMATL** **130MMATL**	411ATL 412ATL 415ATL 500ATL	LS8HRTL LS8HXTL
135 **140**	5 3/16 5 1/4 5 7/16 5 1/2	**135MMATL** **140MMATL**	503ATL 504ATL 507ATL 508ATL	LS9HRTL LS9HXTL
150 **155**	5 11/16 5 3/4 5 15/16 6	**150MMATL** **155MMATL**	511ATL 512ATL 515ATL 600ATL	LS10HRTL LS10HXTL
160A	6	**160MMATL**	–	LS10HRTLE0548 LS10HXTLE0548
160	6 7/16 6 1/2	**160MMATL**	607ATL 608ATL	LS11HRTL LS11HXTL
170 **175** **180**	6 11/16 6 3/4 6 15/16 7	**170MMATL** **175MMATL** **180MMATL**	611ATL 612ATL 615ATL 700ATL	LS12HRTL LS12HXTL
190 **200**	7 1/4 7 1/2 7 15/16 8	**190MMATL** **200MMATL**	704ATL 708ATL 715ATL 800ATL	LS13HRTL LS13HXTL
220 **230**	8 1/2 8 7/8 9	**220MMATL** **230MMATL**	808ATL 814ATL 900ATL	LS14HRTL LS14HXTL

Shaft (d)		Triple Labyrinth Seal Reference		Housing Reference
				Retained Expansion
mm	in.	**mm**	in.	
240 **250**	9 1/2 9 3/4 10	**240MMATL** **250MMATL**	908ATL 912ATL 1000ATL	LS15HRTL LS15HXTL
260 **270** **280**	10 1/2 10 3/4 11	**260MMATL** **270MMATL** **280MMATL**	1008ATL 1012ATL 1100ATL	LS16HRTL LS16HXTL
300 **305**	11 1/2 12	**300MMATL** **305MMATL**	1108ATL 1200ATL	LS17HRTL LS17HXTL
320 **330**	12 1/2 13	**320MMATL** **330MMATL**	1208ATL 1300ATL	LS18HRTL LS18HXTL
340 **350**	14	**340MMATL** **350MMATL**	1400ATL	LS19HRTL LS19HXTL
360 **380**	15	**360MMATL** **380MMATL**	1500ATL	LS20HRTL LS20HXTL
400	16	**400MMATL**	1600ATL	LS21HRTL LS21HXTL
420	17	**420MMATL**	1700ATL	LS22HRTL LS22HXTL
440 **460**	18	**440MMATL** **460MMATL**	1800ATL	LS23HRTL LS23HXTL
480	19	**480MMATL**	1900ATL	LS24HRTL LS24HXTL
500	20	**500MMATL**	2000ATL	LS25HRTL LS25HXTL
530	21	**530MMATL**	2100ATL	LS26HRTL LS26HXTL
560	22	**560MMATL**	2200ATL	LS27HRTL LS27HXTL
580	23	**580MMATL**	2300ATL	LS28HRTL LS28HXTL
600	24	**600MMATL**	2400ATL	LS29HRTL LS29HXTL

TABLE 23. MEDIUM SERIES

Shaft (d)		Triple Labyrinth Seal Reference		Housing Reference Retained Expansion
mm	in.	**mm**	in.	
–	–	–	–	–
45 **50**	1 11/16 1 3/4 1 15/16 2	**45MMATL** **50MMATL**	111ATL 112ATL 115ATL 200ATL	MS3HRTL MS3HXTL
55 **60** **65**	2 3/16 2 1/4 2 7/16 2 1/2	**55MMATL** **60MMATL** **65MMATL**	203ATL 204ATL 207ATL 208ATL	MS4HRTL MS4HXTL
70 **75**	2 11/16 2 3/4 2 15/16 3	**70MMATL** **75MMATL**	211ATL 212ATL 215ATL 300ATL	MS5HRTL MS5HXTL
80 **85** **90**	3 3/16 3 1/4 3 7/16 3 1/2	**80MMATL** **85MMATL** **90MMATL**	303ATL 304ATL 307ATL 308ATL	MS6HRTL MS6HXTL
100 **105**	3 11/16 3 3/4 3 15/16 4	**100MMATL** **105MMATL**	311ATL 312ATL 315ATL 400ATL	MS7HRTL MS7HXTL
110 **115**	4 3/16 4 1/4 4 7/16 4 1/2	**110MMATL** **115MMATL**	403ATL 404ATL 407ATL 408ATL	MS8HRTL MS8HXTL
120 **125** **130**	4 11/16 4 3/4 4 15/16 5	**120MMATL** **125MMATL** **130MMATL**	411ATL 412ATL 415ATL 500ATL	MS10HRTL MS10HXTL
135 **140**	5 3/16 5 1/4 5 7/16 5 1/2	**135MMATL** **140MMATL**	503ATL 504ATL 507ATL 508ATL	MS30HRTL MS30HXTL
150 **155**	5 11/16 5 3/4 5 15/16	**150MMATL** **155MMATL**	511ATL 512ATL 515ATL 600ATL	MS31HRTL MS31HXTL
160A	6	**160MMATL**	–	MS31HRTLE0548 MS31HXTLE0548
160 **170**	6 7/16 6 1/2 6 11/16 6 3/4	**160MMATL** **170MMATLE0547**	607ATL 608ATL 611ATLE0547 612ATLE0547	MS32HRTL MS32HXTL
175 **180**	6 15/16 7	**175MMATL** **180MMATL**	615ATL 700ATL	MS33HRTL MS33HXTL
190 **200**	7 1/4 7 1/2 7 15/16 8	**190MMATL** **200MMATL**	704ATL 708ATL 715ATL 800ATL	MS34HRTL MS34HXTL
220 **230**	8 1/2 8 7/8 9	**220MMATL** **230MMATL**	808ATL 814ATL 900ATL	MS35HRTL MS35HXTL

Shaft (d)		Triple Labyrinth Seal Reference		Housing Reference Retained Expansion
mm	in.	**mm**	in.	
240	9 1/2 9 3/4 10	**240MMATL**	908ATL 912ATL 1000ATL	MS36HRTL MS36HXTL
260 **270** **280**	10 1/2 10 3/4 11	**260MMATL** **270MMATL** **280MMATL**	1008ATL 1012ATL 1100ATL	MS36HRTLE0548 MS36HXTLE0548 MS37HRTL MS37HXTL
300 **305**	11 11/2 12	**300MMATL** **305MMATL**	1108ATL 1200ATL	MS38HRTL MS38HXTL
320 **330**	12 1/2 13	**320MMATL** **330MMATL**	1208ATL 1300ATL	MS39HRTL MS39HXTL
340 **360**	14	**340MMATL** **360MMATLE0547**	1400ATL	MS40HRTL MS40HXTL
380	15	**380MMATL**	1500ATL	MS41HRTL MS41HXTL
400	16	**400MMATL**	1600ATL	MS42HRTL MS42HXTL
420	17	**420MMATL**	1700ATL	MS43HRTL MS43HXTL
440 **460**	18	**440MMATL** **460MMATL**	1800ATL	MS44HRTL MS44HXTL
480	19	**480MMATL**	1900ATL	MS45HRTL MS45HXTL
500	20	**500MMATL**	2000ATL	MS46HRTL MS46HXTL
530	21	**530MMATL**	2100ATL	MS47HRTL MS47HXTL
560	22	**560MMATL**	2200ATL	MS48HRTL MS48HXTL
580	23	**580MMATL**	2300ATL	MS49HRTL MS49HXTL
600	24	**600MMATL**	2400ATL	MS50HRTL MS50HXTL

TRIPLE LABYRINTH HOUSING AND SEAL REFERENCES

TABLE 24. HEAVY SERIES

Shaft (d)		Triple Labyrinth Seal Reference		Housing Reference
				Retained Expansion
mm	in.	**mm**	in.	
–	–	–	–	–
–	–	–	–	–
–	–	–	–	–
–	–	–	–	–
–	–	–	–	–
100 **105**	3 11/16 3 3/4 3 15/16 4	**100MMATL** **105MMATL**	311ATL 312ATL 315ATL 400ATL	HS54HRTL HS54HXTL
110 **115** **120**	4 3/16 4 1/4 4 7/16 4 1/2	**110MMATL** **115MMATL** **120MMATLE0547**	403ATL 404ATL 407ATL 408ATL	HS55HRTL HS55HXTL
125 **130**	4 11/16 4 3/4 4 15/16 5	**125MMATL** **130MMATL**	411ATL 412ATL 415ATL 500ATL	HS56HRTL HS56HXTL
135 **140**	5 3/16 5 1/4 5 7/16 5 1/2	**135MMATL** **140MMATL**	503ATL 504ATL 507ATL 508ATL	HS57HRTL HS57HXTL
150 **155**	5 11/16 5 3/4 5 15/16 6	**150MMATL** **155MMATL**	511ATL 512ATL 515ATL 600ATL	HS58HRTL HS58HXTL
160A	6	**160MMATL**	–	HS58HRTLE0548 HS58HXTLE0548
160 **170**	6 7/16 6 1/2 6 11/16 6 3/4	**160MMATL** **170MMATLE0547**	607ATL 608ATL 611ATLE0547 612ATLE0547	HS59HRTL HS59HXTL
175 **180**	6 15/16 7	**175MMATL** **180MMATL**	615ATL 700ATL	HS60HRTL HS60HXTL
190 **200**	7 1/4 7 1/2 7 15/16 8	**190MMATL** **200MMATL**	704ATL 708ATL 715ATL 800ATL	HS61HRTL HS61HXTL
220 **230**	8 1/2 8 7/8 9	**220MMATL** **230MMATL**	808ATL 814ATL 900ATL	HS62HRTL HS62HXTL

Shaft (d)		Triple Labyrinth Seal Reference		Housing Reference
				Retained Expansion
mm	in.	**mm**	in.	
240	9 1/2 9 3/4 10	**240MMATL**	908ATL 912ATL 1000ATL	HS63HRTL HS63HXTL
260	–	**260MMATL**	–	HS63HRTLE0548 HS63HXTLE0548
270 **280**	10 1/2 10 3/4 11	**270MMATL** **280MMATL**	1008ATL 1012ATL 1100ATL	HS83HRTL HS83HXTL
300 **305**	11 1/2 12	**300MMATL** **305MMATL**	1108ATL 1200ATL	HS65HRTL HS65HXTL
320	13	**320MMATL**	1300ATL	HS66HRTL HS66HXTL
340 **360**	14	**340MMATL** **360MMATLE0547**	1400ATL	HS86HRTL HS86HXTL
380	15	**380MMATL**	1500ATL	HS68HRTL HS68HXTL
400	–	**400MMATL**	–	HS68HRTLE0548 HS68HXTLE0548
420 **440**	17	**420MMATL** **440MMATLE0547**	1700ATL	HS89HRTL HS89HXTL
460	18	**460MMATL**	1800ATL	HS90HRTL HS90HXTL
500	20	**500MMATL**	2000ATL	HS94HRTL HS94HXTL
530	–	**530MMATL**	–	HS94HRTLE0548 HS94HXTLE0548
560	22	**560MMATL**	2200ATL	HS94HRTLE0548 HS94HXTLE0548
580 **600**	23	**580MMATL** **600MMATLE0547**	2300ATL	HS95HRTL HS95HXTL
–	–	–	–	–

BEARING LUBRICATION

The function of a lubricant in a rolling element bearing is to prevent metal-to-metal contact between components, prevent wear and protect against corrosion. Two methods of lubrication are normal grease and oil. In the case of Timken split bearings, grease lubrication is most often employed.

GREASE LUBRICATION

Greases can be used to lubricate Timken split cylindrical roller bearings under most normal conditions. Grease is the preferred method of lubrication because it can be more easily retained within the bearing enclosure and housing, the latter simplifying sealing arrangements. Greases are a semi-solid lubricant generally consisting of a soap emulsified with mineral or synthetic oils. Other ingredients include rust inhibitors or extra pressure additives. The oils employed may be mineral or synthetic depending upon the application.

Timken bearings are heat treated to retain dimensional stability up to 140° C (284° F). At temperatures up to 100° C (212° F), standard high-quality greases may be used. We suggest good quality lithium soap or complex-based greases having extra pressure additives and a penetration number of 3. It is important to note that all values given in this catalog for axial capacity assume the use of grease with extra pressure (EP) additives. If EP additives are not present then axial capacity is reduced by 50 percent.

At temperatures exceeding 100° C (212° F) care must be taken to ensure that the correct thickener and viscosity of base oil are selected. The performance of grease at such temperatures is dependent on a stable thickener and the temperature/viscosity ratio of the base oil. A stable base oil and soap thickener are important, as is the ability of the oil to offer adequate viscosity at an elevated temperature.

In cases of water splash, calcium soap based greases may be used. These are particularly resistant to water wash out.

Care should be taken when mixing greases with different soap thickeners and base oil types. Please contact a Timken engineer for further advice.

For initial lubrication the bearing should always be well filled with grease. The remaining housing space should be filled as follows:

- At low speeds, not exceeding 25 percent of catalog speed rating, we suggest that the remaining housing space be fully filled with grease.
- At medium speeds, between 25 and 50 percent of catalog speed rating, the remaining housing space may be ⅓ to ½ filled with grease.
- At high speeds, exceeding 50 percent of catalog speed rating, the remaining housing space should be left empty.

RE-LUBRICATION

The re-lubrication intervals will be dependent on the prevailing operating conditions.

Greases age and oxidize due to a number of considerations. These include load, speed, temperature, cleanliness, presence of water and even airflow through the bearing.

For retained-type bearings, initial re-lubrication intervals for guidance purposes would be 2-4 weeks with 0.1-0.2 ounces (3-6 mls) added. For expansion type bearings, initial re-lubrication intervals would be 3-4 months with 0.1-0.2 ounces (3-6 mls) added. More accurate intervals and quantities should be established from observations taken during bearing operation. If re-lubrication can be carried out while the bearing is in operation, this will allow for even distribution of the grease. This means of re-lubrication should only be undertaken if it is safe to do so.

OIL LUBRICATION

Timken split cylindrical roller bearings are rarely lubricated with oil. In cases where oil is selected as a means of lubrication, then special consideration must be given to the bearing housing design and sealing.

There are three principal methods of oil lubrication:

OIL SUMP

The oil sits in the bearing housing at a level approximately halfway up the bottom dead center rolling element. Oil circulation around the bearing is then provided via the bearing rotation agitating the oil sump. It is very important to provide a sufficiently dimensioned oil sump as too small a volume will result in increased frequency of oil change and elevated operating temperatures.

OIL MIST

An oil/air mist is injected into the bearing via nozzles, normally a total oil loss system; this provides extremely high speed capability at high cost.

For further advice on oil selection and oil lubrication systems please consult a Timken engineer.

OIL CIRCULATION

Oil is circulated into the bearing housing assembly from an external oil sump. This allows the oil to be cooled and filtered, additionally an external oil sump normally allows for a higher volume of oil. While being a more optimum solution, specialist housing designs must be provided. There are also cost and space considerations with such systems.

ASSEMBLY AND MAINTENANCE

SHAFT CHECK

When fitting bearings on both new and existing installations, the shaft need only be raised 1⁄16 to 1⁄4 inch. This should provide sufficient clearance to allow for easy fitting. Prior to the assembly of any bearing components the shaft must be checked for size, roundness and parallelism.

- Check a minimum of three positions along the journal length.
- Check a minimum of three positions around the shaft to establish roundness
- Shaft tolerances and shaft surface finish are given in the table on page 28.

FITTING THE INNER RING

- Carefully unpack and clean the bearing removing all preservatives.
- Inner race locating clamping rings cannot be removed before the cage has been dismantled.
- Care must be taken that no damage occurs when cage halves are separated.

NOTE

Spring clips should always be retained on one cage half.

- Clean the shaft and lightly oil the bore of the inner race.

- Place the two inner race halves in approximately the correct position with the joints at the top and bottom. With the joints in that position it will allow easy access to the clamp ring screws later when they are tightened
- Ensure that the match marks (black band) in the clamp ring groove on one side of the race coincide.

There should be an equal gap at each joint. If there are no gaps do not proceed and contact a Timken engineer.

- Fit the inner race locating clamping rings. Ensure that the correct clamp ring is fitted in the corresponding groove. To assist in this the clamping rings are intentionally manufactured to different widths on the more popular sizes. In addition, the match-marking groove found on the inner race is repeated on the corresponding clamping ring.

- Make sure that the thrust faces are not damaged when the rings enter the grooves.
- The joints should be at 90 degrees to the inner race joints and the screws should be tightened in such a way that there are four equal gaps.
- Screws should only be finger tight so that the race can be adjusted axially into its final position.

ASSEMBLY OF THE OUTER RACE INTO THE SEATING GROOVE IN THE HOUSING

- The housing must be cleaned thoroughly removing all preservatives. If reusing an existing housing it is essential that the outer race seating groove is clean and free of any hardened grease deposits or corrosion.
- Lightly oil the seating groove and the outside diameter of the outer race halves.
- Place the race halves of the expansion or retained type into the seating groove and ensure that:
    - The match marking numbers on the edge of each race half coincide.
    - The lubrication hole in the outer race is in the upper housing half.
    - The outer race joints should protrude equally above the housing joint faces.

If a retained bearing is being fitted:

- Pre-assemble the housing halves and fully tighten the joint socket head cap screws.
- Ensure that the joints are closed.
- Fit the pins and screws provided and tighten up evenly to ensure that the outer race is fixed square against the opposite shoulder of the seating groove.

Larger bearings (both retained and expansion) may require outer race retaining screws. If these are required, please ensure that the flat washers are not omitted. Once fitted, ensure that the end of the screw does not protrude above the race track surface.

- Separate the housing halves. These are now ready for final assembly.
- Fit the appropriate seals. The seal grooves in the standard housing are suitable for felt and synthetic rubber. If the bearing is inspected or replaced on an existing installation and the housing is re-used, we advise fitting new seals.

PRE-FITTING THE LOWER HOUSING HALF

On existing installations it is often unnecessary to change the support if a bearing, or bearing and housing, has to be replaced. In such cases the support base bolts should not be touched to ensure that the replacement bearing and the old or new housing will be in the same position as previously. In new installations the support base should be positioned with the bolts finger tight. This will allow additional freedom of movement when aligning the inner and outer races.

RETAINED BEARING

- Slide the pre-assembled bottom half into the support base.
- Line up the inner and outer race roller track by adjusting the inner ring sideways into the final position. The final position should be confirmed by passing one half of the cage and roller assembly between the inner and outer races. The cage half should pass freely round the lower half of the bearing without becoming jammed or trapped.
- Remove the bottom housing half and tighten the clamp ring socket head cap screws and fit the cage as explained below.

EXPANSION BEARING

- As in the case of the retained bearing, slide in the pre-assembled bottom housing half.
- Line up the inner ring by adjusting it sideways until it is central with the outer race.
- The clearance between the inner race end faces and inside housing walls should be equal. If cage and rollers are assembled in this position the shaft can expand either side of the centre line by the amount shown in column 2 in table 25.
- When the position of the inner ring is satisfactory, remove the bottom half housing and tighten the clamp ring socket head cap screws and fit the cage as explained below.

A greater degree of expansion allowance can be obtained, but only in one direction. This is achieved by offsetting the inner race with respect to the housing. In this case the total amount of linear movement in service is given in column 3 of table 25.

TABLE 25. EXPANSION BEARING – ALLOWABLE LIMITS

Group	Maximum Expansion if Cage and Rollers are Assembled Central	Maximum Expansion
mm in.	**mm** in.	**mm** in.
40 1 ½	**3.0** ⅛	**6** ¼
50 2	**3.0** ⅛	**6** ¼
60 2 ½	**3.5** 9⁄64	**7** 9⁄32
70 3	**4.0** 5⁄32	**8** 5⁄16
80 3 ½	**6.0** ¼	**12** ½
100 4	**5.5** 7⁄32	**11** 7⁄16
110 4 ½	**5.5** 7⁄32	**11** 7⁄16
120 5	**5.5** 7⁄32	**11** 7⁄16
140 5 ½	**8.0** 5⁄16	**16** ⅝
150 6	**8.0** 5⁄16	**16** ⅝

TIGHTENING OF THE LOCATING CLAMPING RING SCREWS

- When the inner race is in its final position, tighten all four clamping ring screws equally.
- Use the correct hexagon key and a torque wrench.
- Tap down the locating thrust rings with a nylon mallet to ensure that they are seating down correctly within the grooves.

- Re-tighten and repeat the tapping down until the screws are fully tight.
- Torque values for the various screw sizes are given in the tables at the end of this section. If a screw is lost it must be replaced using a high tensile socket head cap screw grade, 12.9.

FITTING THE CAGE

- Grease the inner race roller track and cage.
- Place the cage halves around the inner race ensuring that the match mark numbers on the edge of each cage half are the same and coincide at one joint.
- Press the cage halves into the clip ensuring that the roll pins are fully located.
- Check that the cage assembly runs freely on the inner race.
- Fully pack the cage and roller assembly with the correct type of grease.

FINAL FITTING OF THE HOUSING

- Charge the bottom and upper housing halves with the correct amount of grease. Refer to page 35 for correct types and quantities of grease depending on the application and the speed.
- Lightly oil the spherical diameter of both housing and support and slide the bottom housing half into the support base.
- Lower the shaft with the assembled inner races and cages, until the rollers touch the tracks in the bottom half housing. Make sure that when the rollers in the retained bearing enter the outer race groove they do not damage the lips.

- Turning the shaft by hand, the rollers should move freely between the thrust shoulders of the inner race and the lips of the retained outer race.
- Fit the upper housing half then tighten the housing joint screws. Torque values for housing screws are given in the tables on pages 40-42. Check that there is no gap at the joints.

FITTING THE SUPPORT CAP

- Place the support cap over the upper housing half and engage the locating dowels at the joint.

- Using a nylon mallet, gently tap the support cap down to close the gap at the joints.
- Fit the bolts and tighten just enough to hold the support joints closed.
- At this point, and only if it is safe to do so, the shaft should be run at low speed and if possible, with low loading. This will allow the spherical locating surfaces to correctly align. If running the shaft under power is not an option, the shaft should be rotated by hand to achieve this goal.
- Tighten the cap bolts fully using a torque wrench. At this point the support base bolts should also be checked and tightened as required. Torque values for support screws are given in the tables on pages 40-42.

SCREW SIZES, KEY SIZES AND TORQUE VALUES
LIGHT SERIES

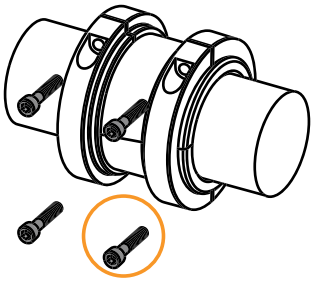

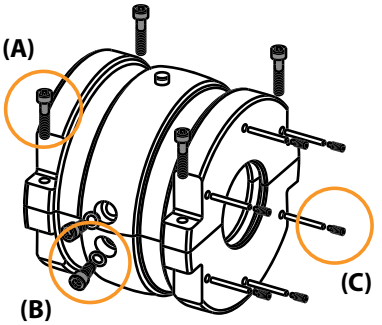

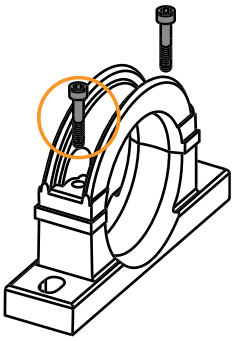

TABLE 26. LIGHT SERIES

Shaft (d)		Clamping Ring[1]			Housing									Support		
					Joint (A)			Radial Retainer (B)			(HR only) (C)					
		Screw	Key	Torque	Screw	Key	Torque	Screw	Key	Torque	Screw	Key	Torque	Screw	Key	Torque
mm	in.			**Nm** (lb.ft)			**Nm** (lb.ft)			**Nm** (lb.ft)			**Nm** (lb.ft)			**Nm** (lb.ft)
35 - 40	1 3/16 - 1 1/2	M4	3	**4** (2.6)	M4	3	**4** (2.6)	–	–	–	M4	3	**4** (2.6)	M8	6	**27** (20)
45 - 50	1 11/16 - 2	M4	3	**4** (2.6)	M4	3	**4** (2.6)	–	–	–	M4	3	**4** (2.6)	M8	6	**27** (20)
60 - 65	2 3/16 - 2 1/2	M4	3	**4** (2.6)	M4	3	**4** (2.6))	–	–	–	M4	3	**4** (2.6))	M10	8	**54** (40)
70 - 75	2 11/16 - 3	M4	3	**4** (2.6)	M4	3	**4** (2.6)	–	–	–	M4	3	**4** (2.6)	M12	10	**94** (69)
80 - 90	3 3/16 - 3 1/2	M5	4	**7** (5)	M5	4	**7** (5)	–	–	–	M4	3	**4** (2.6)	M16	14	**231** (170)
100 - 105	3 11/16 - 4	M6	3	**11** (8)	M6	3	**11** (8)	–	–	–	M4	3	**4** (2.6)	M16	14	**231** (170)
110 - 115	4 3/16 - 4 1/2	M6	3	**11** (8)	M6	3	**11** (8)	–	–	–	M6	3	**11** (8)	M20	17	**434** (320)
120 - 130	4 11/16 - 5	M6	3	**11** (8)	M6	3	**11** (8)	–	–	–	M6	3	**11** (8)	M20	17	**434** (320)
135 - 140	5 3/16 - 5 1/2	M8	6	**27** (20)	M8	6	**27** (20)	–	–	–	M6	3	**11** (8)	M20	17	**434** (320)
150 - 155	5 11/16 - 6	M8	6	**27** (20)	M8	6	**27** (20)	–	–	–	M6	3	**11** (8)	M20	17	**434** (320)
160	6 7/16 - 6 1/2	M8	6	**27** (20)	M8	6	**27** (20)	–	–	–	M6	3	**11** (8)	M16	14	**231** (170)
170 - 180	6 11/16 - 7	M8	6	**27** (20)	M8	6	**27** (20)	–	–	–	M6	3	**11** (8)	M16	14	**231** (170)
190 - 200	7 1/4 - 8	M8	6	**27** (20)	M8	6	**27** (20)	M10	8	**54** (40)	M6	3	**11** (8)	M16	14	**231** (170)
220 - 230	8 1/2 - 9	M10	8	**54** (40)	M10	8	**54** (40)	M10	8	**54** (40)	M6	3	**11** (8)	M16	14	**231** (170)
240 - 250	9 1/2 - 10	M10	8	**54** (40)	M10	8	**54** (40)	M10	8	**54** (40)	M6	3	**11** (8)	M20	17	**434** (320)
260 - 280	10 1/2 - 11	M10	8	**54** (40)	M10	8	**54** (40)	M10	8	**54** (40)	M10	8	**54** (40)	M20	17	**434** (320)
300	11 1/2 - 12	M10	8	**54** (40)	M10	8	**54** (40)	M10	8	**54** (40)	M10	8	**54** (40)	M20	17	**434** (320)
320 - 330	12 1/2 - 13	M12	10	**94** (69)	M12	10	**94** (69)	M10	8	**54** (40)	M10	8	**54** (40)	M20	17	**434** (320)
340 - 350	14	M12	10	**94** (69)	M12	10	**94** (69)	M10	8	**54** (40)	M10	8	**54** (40)	M20	17	**434** (320)
360 - 380	15	M12	10	**94** (69)	M12	10	**94** (69)	M10	8	**54** (40)	M10	8	**54** (40)	M20	17	**434** (320)
400	16	M12	10	**94** (69)	M12	10	**94** (69)	M10	8	**54** (40)	M10	8	**54** (40)	M20	17	**434** (320)
420	17	M12	10	**94** (69)	M12	10	**94** (69)	M12	10	**94** (69)	M10	8	**54** (40)	M20	17	**434** (320)
440 - 460	18	M12	10	**94** (69)	M12	10	**94** (69)	M12	10	**94** (69)	M10	8	**54** (40)	M20	17	**434** (320)
480	19	M12	10	**94** (69)	M12	10	**94** (69)	M12	10	**94** (69)	M10	8	**54** (40)	M20	17	**434** (320)
500	20	M16	14	**231** (170)	M16	14	**231** (170)	M12	10	**94** (69)	M10	8	**54** (40)	M20	17	**434** (320)
530	21	M16	14	**231** (170)	M16	14	**231** (170)	M12	10	**94** (69)	M10	8	**54** (40)	M20	17	**434** (320)
560	22	M16	14	**231** (170)	M16	14	**231** (170)	M12	10	**94** (69)	M10	8	**54** (40)	M20	17	**434** (320)
580	23	M16	14	**231** (170)	M16	14	**231** (170)	M12	10	**94** (69)	M10	8	**54** (40)	M20	17	**434** (320)
600	24	M16	14	**231** (170)	M16	14	**231** (170)	M12	10	**94** (69)	M10	8	**54** (40)	M20	17	**434** (320)

[1] May be increased by up to 20 percent for high axial load applications.

MEDIUM SERIES

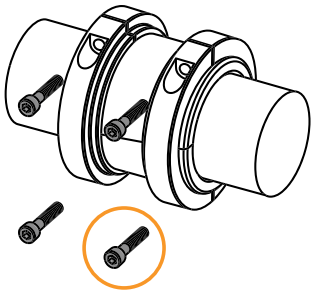

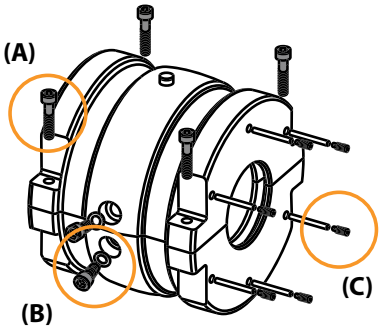

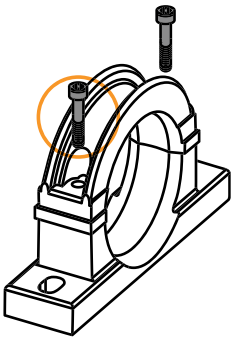

TABLE 27. MEDIUM SERIES

Shaft (d)		Clamping Ring[1]			Housing									Support		
					Joint (A)			Radial Retainer (B)			(HR only) (C)					
		Screw	Key	Torque	Screw	Key	Torque	Screw	Key	Torque	Screw	Key	Torque	Screw	Key	Torque
mm	in.			**Nm** (lb.ft)			**Nm** (lb.ft)			**Nm** (lb.ft)			**Nm** (lb.ft)			**Nm** (lb.ft)
45 - 50	1 11⁄16 - 2	M5	4	**7** (5)	M5	4	**7** (5)	–	–	–	M4	3	**4** (2.6)	M110	8	**54** (40)
60 - 65	2 3⁄16 - 2 1⁄2	M5	4	**7** (5)	M5	4	**7** (5)	–	–	–	M4	3	**4** (2.6)	M12	10	**94** (69)
70 - 75	2 11⁄16 - 3	M6	3	**11** (8)	M6	3	**11** (8)	–	–	–	M4	3	**4** (2.6)	M16	14	**231** (170)
80 - 90	3 3⁄16 - 3 1⁄2	M6	3	**11** (8)	M6	3	**11** (8)	–	–	–	M4	3	**4** (2.6)	M16	14	**231** (170)
100 - 105	3 11⁄16 - 4	M6	3	**11** (8)	M6	3	**11** (8)	–	–	–	M4	3	**4** (2.6)	M20	17	**434** (320)
110 - 115	4 3⁄16 - 4 1⁄2	M8	6	**27** (20)	M8	6	**27** (20)	–	–	–	M6	3	**11** (8)	M20	17	**434** (320)
120 - 130	4 11⁄16 - 5	M8	6	**27** (20)	M8	6	**27** (20)	–	–	–	M6	3	**11** (8)	M20	17	**434** (320)
135 - 140	5 3⁄16 - 5 1⁄2	M8	6	**27** (20)	M8	6	**27** (20)	–	–	–	M6	3	**11** (8)	M20	17	**434** (320)
150 - 155	5 11⁄16 - 6	M8	6	**27** (20)	M8	6	**27** (20)	–	–	–	M6	3	**11** (8)	M20	17	**434** (320)
160 - 170	6 7⁄16 - 6 1⁄2	M10	8	**54** (40)	M10	8	**54** (40)	–	–	–	M6	3	**11** (8)	M20	17	**434** (320)
180	6 11⁄16 - 7	M10	8	**54** (40)	M10	8	**54** (40)	M10	8	**54** (40)	M6	3	**11** (8)	M20	17	**434** (320)
190 - 200	7 1⁄4 - 8	M12	10	**94** (69)	M12	10	**94** (69)	M10	8	**54** (40)	M6	3	**11** (8)	M20	17	**434** (320)
220 - 230	8 1⁄2 - 9	M12	10	**94** (69)	M12	10	**94** (69)	M10	8	**54** (40)	M6	3	**11** (8)	M20	17	**434** (320)
240 - 260	9 1⁄2 - 10	M12	10	**94** (69)	M12	10	**94** (69)	M10	8	**54** (40)	M10	8	**54** (40)	M20	17	**434** (320)
280	10 1⁄2 - 11	M16	14	**231** (170)	M16	14	**231** (170)	M10	8	**54** (40)	M10	8	**54** (40)	M20	17	**434** (320)
300	11 1⁄2 - 12	M16	14	**231** (170)	M16	14	**231** (170)	M10	8	**54** (40)	M10	8	**54** (40)	M20	17	**434** (320)
320 - 330	12 1⁄2 - 13	M16	14	**231** (170)	M16	14	**231** (170)	M10	8	**54** (40)	M10	8	**54** (40)	M20	17	**434** (320)
340 - 360	14	M16	14	**231** (170)	M16	14	**231** (170)	M12	10	**94** (69)	M10	8	**54** (40)	M20	17	**434** (320)
380	15	M16	14	**231** (170)	M16	14	**231** (170)	M12	10	**94** (69)	M10	8	**54** (40)	M20	17	**434** (320)
400	16	M16	14	**231** (170)	M16	14	**231** (170)	M12	10	**94** (69)	M10	8	**54** (40)	M20	17	**434** (320)
420	17	M16	14	**231** (170)	M16	14	**231** (170)	M12	10	**94** (69)	M10	8	**54** (40)	M20	17	**434** (320)
440 - 460	18	M16	14	**231** (170)	M16	14	**231** (170)	M12	10	**94** (69)	M10	8	**54** (40)	M20	17	**434** (320)
480	19	M20	17	**434** (320)	M20	17	**434** (320)	M12	10	**94** (69)	M10	8	**54** (40)	M24	19	**760** (560)
500	20	M20	17	**434** (320)	M20	17	**434** (320)	M12	10	**94** (69)	M10	8	**54** (40)	M24	19	**760** (560)
530	21	M20	17	**434** (320)	M20	17	**434** (320)	M12	10	**94** (69)	M10	8	**54** (40)	M24	19	**760** (560)
560	22	M20	17	**434** (320)	M20	17	**434** (320)	M12	10	**94** (69)	M10	8	**54** (40)	M24	19	**760** (560)
580	23	M20	17	**434** (320)	M20	17	**434** (320)	M12	10	**94** (69)	M10	8	**54** (40)	M24	19	**760** (560)
600	24	M20	17	**434** (320)	M20	17	**434** (320)	M12	10	**94** (69)	M10	8	**54** (40)	M24	19	**760** (560)

[1] May be increased by up to 20 percent for high axial load applications.

SCREW SIZES, KEY SIZES AND TORQUE VALUES - CONT'D
HEAVY SERIES

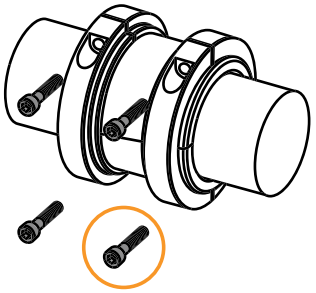

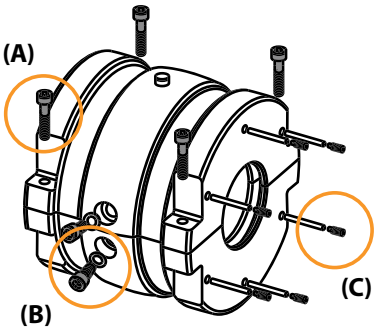

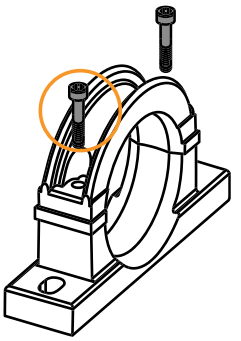

TABLE 28. HEAVY SERIES

Shaft (d)		Clamping Ring[1]			Housing									Support		
					Joint (A)			Radial Retainer (B)			(HR only) (C)					
		Screw	Key	Torque	Screw	Key	Torque	Screw	Key	Torque	Screw	Key	Torque	Screw	Key	Torque
mm	in.			**Nm** (lb.ft)			**Nm** (lb.ft)			**Nm** (lb.ft)			**Nm** (lb.ft)			**Nm** (lb.ft)
100 - 105	3 11/16 - 4	M10	8	**54** (40)	M10	8	**54** (40)	M10	8	**54** (40)	M6	3	**11** (8)	M16	14	**231** (170)
110 - 120	4 3/16 - 4 1/2	M10	8	**54** (40)	M10	8	**54** (40)	M10	8	**54** (40)	M6	3	**11** (8)	M16	14	**231** (170)
125 - 130	4 15/16 - 5	M10	8	**54** (40)	M10	8	**54** (40)	M10	8	**54** (40)	M10	8	**54** (40)	M16	14	**231** (170)
135 - 140	5 3/16 - 5 1/2	M10	8	**54** (40)	M10	8	**54** (40)	M10	8	**54** (40)	M10	8	**54** (40)	M20	17	**434** (320)
150 - 155	5 11/16 - 6	M10	8	**54** (40)	M10	8	**54** (40)	M10	8	**54** (40)	M10	8	**54** (40)	M20	17	**434** (320)
160 - 170	6 7/16 - 6 11/16	M12	10	**94** (69)	M12	10	**94** (69)	M12	10	**94** (69)	M10	8	**54** (40)	M20	17	**434** (320)
180	6 3/4 - 7	M12	10	**94** (69)	M12	10	**94** (69)	M12	10	**94** (69)	M10	8	**54** (40)	M20	17	**434** (320)
190 - 200	7 1/4 - 8	M12	10	**94** (69)	M12	10	**94** (69)	M12	10	**94** (69)	M10	8	**54** (40)	M20	17	**434** (320)
220 - 230	8 1/2 - 9	M16	14	**231** (170)	M16	14	**231** (170)	M12	10	**94** (69)	M10	8	**54** (40)	M20	17	**434** (320)
240 - 260	9 1/2 - 10	M16	14	**231** (170)	M16	14	**231** (170)	M12	10	**94** (69)	M10	8	**54** (40)	M20	17	**434** (320)
280	11	M20	17	**434** (320)	M20	17	**434** (320)	M12	10	**94** (69)	M10	8	**54** (40)	M20	17	**434** (320)
300	12	M20	17	**434** (320)	M20	17	**434** (320)	M12	10	**94** (69)	M10	8	**54** (40)	M20	17	**434** (320)
320 - 330	13	M20	17	**434** (320)	M20	17	**434** (320)	M12	10	**94** (69)	M10	8	**54** (40)	M24	19	**760** (560)
340 - 360	14	M24	19	**760** (560)	M20	17	**434** (320)	M12	10	**94** (69)	M10	8	**54** (40)	M24	19	**760** (560)
380 - 400	15 - 16	M24	19	**760** (560)	M20	17	**434** (320)	M12	10	**94** (69)	M10	8	**54** (40)	M24	19	**760** (560)
420 - 440	17	M24	19	**760** (560)	M20	17	**434** (320)	M12	10	**94** (69)	M16	14	**231** (170)	M24	19	**760** (560)
460	18	M24	19	**760** (560)	M20	17	**434** (320)	M12	10	**94** (69)	M16	14	**231** (170)	M24	19	**760** (560)
480	19	M24	19	**760** (560)	M20	17	**434** (320)	M12	10	**94** (69)	M16	14	**231** (170)	M24	19	**760** (560)
500	20	M24	19	**760** (560)	M20	17	**434** (320)	M16	14	**231** (170)	M10	8	**54** (40)	M24	19	**760** (560)
530	21	M24	19	**760** (560)	M20	17	**434** (320)	M16	14	**231** (170)	M10	8	**54** (40)	M24	19	**760** (560)
560	22	M24	19	**760** (560)	M20	17	**434** (320)	M12	10	**94** (69)	M10	8	**54** (40)	M24	19	**760** (560)
580	23	M24	19	**760** (560)	M20	17	**434** (320)	M12	10	**94** (69)	M10	8	**54** (40)	M24	19	**760** (560)
600	24	M24	19	**760** (560)	M20	17	**434** (320)	M12	10	**94** (69)	M10	8	**54** (40)	M24	19	**760** (560)

[1] May be increased by up to 20 percent for high axial load applications.

SHIPPING WEIGHTS

TABLE 29. LIGHT SERIES

		Bearing	Housing	Support	Comp. Unit
mm	in.	**Kg** lb.	**Kg** lb.	**Kg** lb.	**Kg** lb.
35 **40**	1 3/16 1 1/2	**1.3** 3	**2.5** 6	**3** 7	**6.8** 16
45 **50**	1 11/16 2	**1.8** 4	**3.5** 8	**5** 11	**10.3** 23
60 **65**	2 3/16 2 1/2	**2.3** 5	**4.4** 10	**5.9** 13	**12.6** 28
70 **75**	2 11/16 3	**3.3** 7	**6.5** 14	**9.5** 21	**19.3** 42
80 **90**	3 3/16 3 1/2	**5** 11	**9** 20	**15** 33	**29** 64
100 **105**	3 11/16 4	**7** 15	**11** 24	**16** 35	**34** 74
110 **115**	4 3/16 4 1/2	**10.5** 23	**16** 35	**24** 53	**50.5** 111
120 **130**	4 11/16 5	**14** 31	**24** 53	**41** 90	**79** 174
135 **140**	5 3/16 5 1/2	**17** 37	**27** 59	**49** 108	**93** 204
150 **155**	5 11/16 6	**18** 40	**31** 68	**49** 108	**98** 216
160	6 7/16 6 1/2	**19** 42	**35** 77	**65** 143	**119** 262
170 **180**	6 11/16 7	**23** 51	**36** 79	**73** 161	**132** 291
190 **200**	7 1/4 8	**26** 57	**45** 99	**92** 202	**163** 358
220 **230**	8 1/2 9	**33** 73	**48** 106	**117** 257	**198** 436
240 **250**	9 1/2 10	**42** 92	**60** 132	**147** 323	**249** 547
260 **280**	10 1/2 11	**53** 117	**73** 161	**171** 376	**297** 654
300 **305**	11 1/2 12	**60** 132	**89** 196	**199** 438	**348** 766
320 **330**	12 1/2 13	**72** 158	**109** 240	**214** 471	**395** 869
340 **350**	14	**79** 174	**121** 266	**241** 530	**441** 970
360 **380**	15	**90** 198	**130** 286	**294** 647	**514** 1131
400	16	**96** 211	**145** 319	**315** 693	**556** 1223
420	17	**105** 231	**155** 341	**323** 711	**583** 1283
440 **460**	18	**119** 262	**156** 343	**377** 829	**652** 1434
480	19	**123** 271	**167** 367	**467** 1027	**757** 1665
500	20	**139** 306	**198** 436	**449** 988	**786** 1730
530	21	**180** 396	**220** 484	**502** 1104	**902** 1984
560	22	**185** 407	**258** 568	**578** 1272	**1021** 2247
580	23	**190** 418	**280** 616	**690** 1518	**1160** 2552
600	24	**240** 528	**296** 651	**730** 1606	**1266** 2785

TABLE 30. MEDIUM SERIES

		Bearing	Housing	Support	Comp. Unit
mm	in.	**Kg** lb.	**Kg** lb.	**Kg** lb.	**Kg** lb.
–	–	–	–	–	–
45 **50**	1 11/16 2	**2.5** 6	**5** 11	**5.9** 13	**13.4** 30
60 **65**	2 3/16 2 1/2	**3.7** 8	**8** 18	**9.5** 21	**21.2** 47
70 **75**	2 11/16 3	**5.6** 12	**10** 22	**15** 33	**30.6** 67
80 **90**	3 3/16 3 1/2	**7** 15	**12** 26	**16** 35	**35** 76
100 **105**	3 11/16 4	**11** 24	**13** 29	**24** 53	**48** 106
110 **115**	4 3/16 4 1/2	**15.5** 34	**20** 44	**41** 90	**76.5** 168
120 **130**	4 11/16 5	**21** 46	**28** 62	**49** 108	**98** 216
135 **140**	5 3/16 5 1/2	**25** 55	**36** 79	**72** 158	**133** 292
150 **155**	5 11/16 6	**31** 68	**42** 92	**80** 176	**153** 336
160 **170**	6 7/16 6 1/2	**40** 88	**58** 128	**118** 260	**216** 476
180	6 11/16 7	**47** 103	**68** 150	**138** 304	**253** 557
190 **200**	7 1/4 8	**59** 130	**86** 189	**192** 422	**337** 741
220 **230**	8 1/2 9	**69** 152	**101** 222	**229** 504	**399** 878
240 **260**	9 1/2 10	**79** 174	**108** 238	**277** 609	**464** 1021
270 **280**	10 1/2 11	**87** 191	**134** 295	**320** 704	**541** 1190
300 **305**	11 1/2 12	**125** 275	**132** 290	**372** 818	**629** 1383
320 **330**	12 1/2 13	**150** 330	**176** 387	**385** 847	**711** 1564
340 **360**	14	**184** 405	**190** 418	**477** 1049	**851** 1872
380	15	**187** 411	**213** 469	**490** 1078	**890** 1958
400	16	**210** 462	**258** 568	**540** 1188	**1008** 2218
420	17	**245** 539	**269** 592	**586** 1289	**1100** 2420
440 **460**	18	**255** 561	**270** 594	**623** 1371	**1148** 2526
480	19	**268** 590	**277** 609	**690** 1518	**1235** 2717
500	20	**276** 607	**328** 722	**745** 1639	**1349** 2968
530	21	**314** 691	**357** 785	**899** 1978	**1570** 3454
560	22	**341** 750	**385** 847	**960** 2112	**1686** 3709
580	23	**375** 825	**405** 891	**1001** 2202	**1781** 3918
600	24	**390** 858	**460** 1012	**1056** 2323	**1906** 4193

TABLE 31. HEAVY SERIES

		Bearing	Housing	Support	Comp. Unit
mm	in.	**Kg** lb.	**Kg** lb.	**Kg** lb.	**Kg** lb.
–	–	–	–	–	–
–	–	–	–	–	–
–	–	–	–	–	–
–	–	–	–	–	–
–	–	–	–	–	–
100 **105**	3 11/16 4	**35** 77	**40** 88	**121** 266	**196** 431
110 **120**	4 3/16 4 1/2	**41** 90	**45** 90	**141** 310	**227** 499
125 **130**	4 11/16 5	**42** 92	**46** 101	**156** 343	**244** 536
135 **140**	5 3/16 5 1/2	**50** 110	**51** 112	**197** 433	**298** 655
150 **155**	5 11/16 6	**59** 130	**75** 165	**261** 574	**395** 869
160 **170**	6 7/16 6 1/2	**74** 163	**87** 191	**291** 640	**452** 994
175 **180**	6 11/16 7	**83** 183	**91** 200	**338** 744	**512** 1127
190 **200**	7 1/4 8	**105** 231	**120** 264	**454** 999	**679** 1494
220 **230**	8 1/2 9	**151** 332	**164** 361	**408** 1395	**949** 2088
240 **260**	9 1/2 10	**153** 337	**174** 383	**540** 1621	**1064** 2341
280	11	**203** 447	**201** 442	**459** 1010	**863** 1899
300	12	**242** 532	**249** 548	**1019** 2242	**1510** 3322
320	13	**327** 719	**300** 660	**1116** 2455	**1743** 3834
340 **360**	14	**375** 825	**361** 794	**1620** 3564	**2356** 5183
380 **400**	15 16	**436** 959	**433** 953	**1538** 3384	**2407** 5296
–	–	–	–	–	–
420 **440**	17	**400** 880	**443** 975	**1014** 2231	**1857** 4086
460	18	**636** 1399	**274** 603	**1513** 3329	**2423** 5331
–	–	–	–	–	–
500 **530**	20 21	**700** 1540	**880** 1936	**1863** 4099	**3443** 7575
–	–	–	–	–	–
560	22	**675** 1485	**694** 1527	**1847** 4063	**3216** 7075
580 **600**	23 24	**700** 1540	**770** 1694	**1794** 3947	**3264** 7181
–	–	–	–	–	–

HOUSED UNIT CONVERSION WORKSHEET

Option #1: To help us understand your application needs, please fill out the information below. This data will enable us to select the appropriate split cylindrical bearing housed unit that will perform best for your application.

Option #2: Please fill out the following information to help us select the appropriate split cylindrical bearing housed unit for your application.

Option #3: When converting to a different style of housed unit, use this worksheet to provide the application data specific to your project needs. This information is critical to ensuring the appropriate split cylindrical bearing unit is selected.

Date: _____

Customer Contact: _____ Timken Contact: _____

Application Details: _____

_____

Drive Details

Motor Power: _____ No. Belts: _____

Direct Drive: ____YES ____NO Drive Pulley Dia. (mm): _____

Belt Drive: ____YES ____NO Driven Pulley Dia. (mm): _____

Gear Drive: ____YES ____NO Current DE Bearing: _____

Gear Ratio: ____YES ____NO Current NDE Bearing: _____

Environment

Wet: ___YES ___NO Bearing Temp. (° C or ° F): _____

Dry: ___YES ___NO Shaft Diameter (mm): _____

Dust: ___YES ___NO

Severe: ___YES ___NO Shaft Speed (RPM): _____

Submerged: ____YES____NO

Load	***Lubrication***	***Specification***	***Amount***
Radial (kN or lbs): _____	Oil: ____YES ___NO	_____	_____
Axial (kN or lbs): _____	Grease: ____YES ___NO	_____	_____

Duty

Intermittent: ____YES ____NO

Continuous: ____YES ____NO

Current Sealing Arrangement: _____

_____

LIGHT SERIES

Light series bearing products are by far the most commonly utilized range within the split bearing family. With a wide variety of mounting and sealing solutions available, light series bearing units can readily be matched to an ever-increasing range of applications. If a standard catalog product does not meet your requirements, a Timken engineer will be happy to provide help and advice on your application.

The following topics are covered within this section:

LIGHT SERIES BEARING AND HOUSING

35 MM TO 155 MM (1 3⁄16 IN. TO 6 IN.)

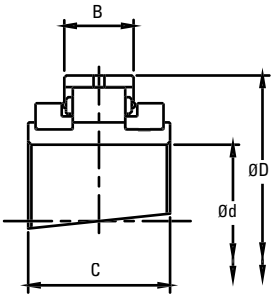

Expansion BX

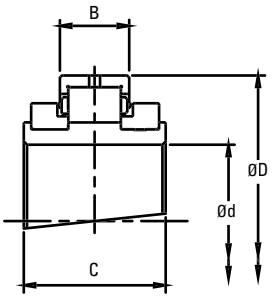

Retained BR

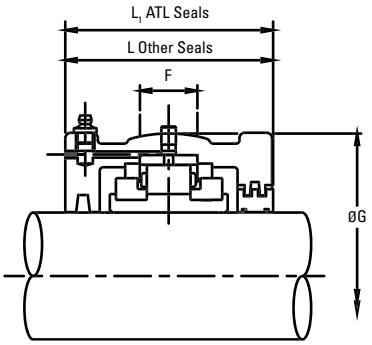

Shaft (d)		Reference		Bearings Ratings							Housing Reference						
		Add **BR** for Retained Add **BX** for Expansion e.g. LSE215BR		Dynamic C_r	Static C_{or}	Axial C_a	Max	D	B	C	ATL Seals Add **HRTL** for Retained Add **HXTL** for Expansion e.g. LS4HRTL	Other Seal Types Add **HR** for Retained Add **HX** for Expansion e.g. LSE215HR		G	F	L	L_1
mm	in.			**kN** lb.	**kN** lb.	**kN** lb.	RPM	**mm** in.	**mm** in.	**mm** in.				**mm** in.	**mm** in.	**mm** in.	**mm** in.
35 **40**	1 3⁄16 1 1⁄4 1 7⁄16 1 1⁄2	LSM35 LSM40	LSE103 LSE104 LSE107 LSE108	**65** 14613	**68** 15287	**3.20** 719.38	5400	**3.313** 84.14	**0.937** 23.80	**2.165** 55.00	LS1	LSM35 LSM40	LSE103 LSE104 LSE107 LSE108	**100.00** 3.937	**25** 1.0	**84** 3.3	**91** 3.6
45 **50**	1 11⁄16 1 3⁄4 1 15⁄16 2	LSM45 LSM50	LSE111 LSE112 LSE115 LSE200	**83** 18659	**87** 19558	**3.60** 809.30	4630	**3.875** 98.42	**1.000** 25.40	**2.362** 60.00	LS2	LSM45 LSM50	LSE111 LSE112 LSE115 LSE200	**117.48** 4.625	**25** 1.0	**96** 3.8	**98** 3.9
55 **60** **65**	2 3⁄16 2 1⁄4 2 7⁄16 2 1⁄2	LSM55 LSM60 LSM65	LSE203 LSE204 LSE207 LSE208	**103** 23155	**115** 25853	**5.40** 1213.95	3940	**4.500** 114.30	**1.063** 27.00	**2.362** 60.00	LS3	LSM55 LSM60 LSM65	LSE203 LSE204 LSE207 LSE208	**134.94** 5.313	**32** 1.3	**102** 4.0	**104** 4.1
70 **75**	2 11⁄16 2 3⁄4 2 15⁄16 3	LSM70 LSM75	LSE211 LSE212 LSE215 LSE300	**138** 31024	**161** 36194	**7.60** 1708.53	3310	**5.250** 133.35	**1.252** 31.80	**2.559** 65.00	LS4	LSM70 LSM75	LSE211 LSE212 LSE215 LSE300	**157.16** 6.187	**38** 1.5	**112** 4.4	**114** 4.5
80 **85** **90**	3 3⁄16 3 1⁄4 3 7⁄16 3 1⁄2	LSM80 LSM85 LSM90	LSE303 LSE304 LSE307 LSE308	**187** 42039	**231** 51931	**12.40** 2787.59	2790	**6.000** 152.4	**1.531** 38.90	**2.953** 75.00	LS5	LSM80 LSM85 LSM90	LSE303 LSE304 LSE307 LSE308	**177.80** 7.000	**50** 2.0	**134** 5.3	**136** 5.4
100 **105**	3 11⁄16 3 3⁄4 3 15⁄16 4	LSM100 LSM105	LSE311 LSE312 LSE315 LSE400	**288** 64745	**366** 82280	**16.00** 3596.90	2340	**6.875** 174.62	**1.783** 45.30	**3.346** 85.00	LS6	LSM100 LSM105	LSE311 LSE312 LSE315 LSE400	**203.20** 8.000	**50** 2.0	**132** 5.2	**134** 5.3
110 **115**	4 3⁄16 4 1⁄4 4 7⁄16 4 1⁄2	LSM110 LSM115	LSE403 LSE404 LSE407 LSE408	**316** 71040	**427** 95993	**18.60** 4181.39	1970	**8.000** 203.20	**1.846** 46.90	**3.543** 90.00	LS7	LSM110 LSM115	LSE403 LSE404 LSE407 LSE408	**231.78** 9.125	**64** 2.5	**140** 5.5	**142** 5.6
120 **125** **130**	4 11⁄16 4 3⁄4 4 15⁄16 5	LSM120 LSM125 LSM130	LSE411 LSE412 LSE415 LSE500	**363** 81606	**496** 111505	**22.20** 4990.69	1740	**8.750** 222.25	**2.126** 54.00	**3.740** 95.00	LS8	LSM120 LSM125 LSM130	LSE411 LSE412 LSE415 LSE500	**266.70** 10.500	**76** 3.0	**154** 6.1	**156** 6.1
135 **140**	5 3⁄16 5 1⁄4 5 7⁄16 5 1⁄2	LSM135 LSM140	LSE503 LSE504 LSE507 LSE508	**422** 94869	**585** 131513	**25.80** 5799.99	1570	**9.500** 241.30	**2.189** 55.60	**3.874** 98.40	LS9	LSM135 LSM140	LSE503 LSE504 LSE507 LSE508	**279.40** 11.000	**76** 3.0	**166** 6.5	**168** 6.6
150 **155** **160**	5 11⁄16 5 3⁄4 5 15⁄16 6	LSM150 LSM155 LSM160A	LSE511 LSE512 LSE515 LSE600	**459** 103187	**664** 149273	**29.40** 6609.30	1450	**10.000** 254.00	**2.189** 55.60	**3.874** 98.40	LS10 LS10E0548	LSM150 LSM155 LSM160A	LSE511 LSE512 LSE515 LSE600	**295.28** 11.625	**82** 3.2	**172** 6.8	**174** 6.9

LIGHT SERIES SUPPORT
S01 - S10

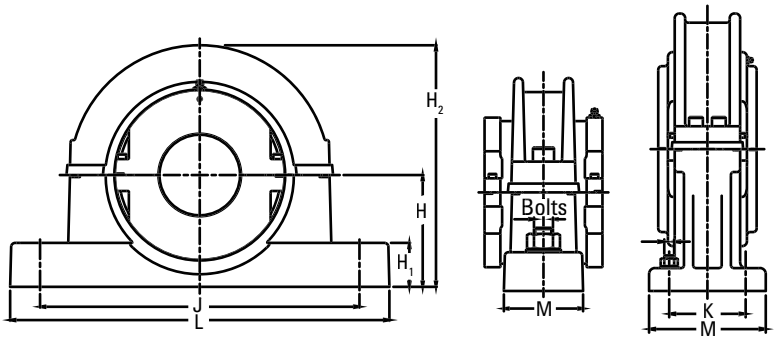

Shaft (d)		Support Reference	H	H_1	H_2	J x K	L x M	Bolts
mm	in.		**mm** in.	**mm** in.	**mm** in.	**mm** in.	**mm** in.	
35 **40**	1 3/16 1 1/4 1 7/16 1 1/2	S01	**60** 2.362	**22** 0.9	**138** 5.4	**180** 7.1	**228 x 60** 9 x 2.4	2 x M12
45 **50**	1 11/16 1 3/4 1 15/16 2	S02	**70** 2.756	**25** 1.0	**158** 6.2	**214** 8.4	**270 x 60** 10.6 x 2.4	2 x M16
55 **60** **65**	2 3/16 2 1/4 2 7/16 2 1/2	S03	**80** 3.150	**32** 1.3	**180** 7.1	**234** 9.2	**280 x 70** 11 x 2.8	2 x M16
70 **75**	2 11/16 2 3/4 2 15/16 3	S04	**95** 3.740	**38** 1.5	**208** 8.2	**270** 10.6	**330 x 76** 13 x 3	2 x M20
80 **85** **90**	3 3/16 3 1/4 3 7/16 3 1/2	S05 S05-4B	**112** 4.409 **112** 4.409	**44** 1.7 **44** 1.7	**242** 9.53 **242** 9.53	**320** 12.6 **328 x 88.9** 12.9 x 3.5	**380 x 90** 15 x 3.5 **380 x 140** 15 x 5.51	2 x M24 4 x M20
100 **105**	3 11/16 3 3/4 3 15/16 4	S06 S06-4B	**125** 4.921 **125** 4.921	**55** 2.17 **55** 2.17	**265** 10.43 **265** 10.43	**354** 13.9 **368 x 102** 14.5 x 4	**420 x 102** 16.5 x 4 **426 x 152** 16.8 x 6	2 x M24 4 x M20
110 **115**	4 3/16 4 1/4 4 7/16 4 1/2	S07 S07-4B	**143** 5.630 **143** 5.630	**60** 2.4 **60** 2.4	**303** 11.93 **303** 11.93	**392** 15.4 **412 x 114.3** 16.2 x 4.5	**466 x 120** 18.3 x 4.7 **476 x 172** 17.74 x 6.77	2 x M24 4 x M20
120 **125** **130**	4 11/16 4 3/4 4 15/16 5	S08	**162** 6.378	**38** 1.5	**372** 14.6	**450 x 120** 17.7 x 4.7	**508 x 178** 20 x 7	4 x M24
135 **140**	5 3/16 5 1/4 5 7/16 5 1/2	S09	**181** 7.126	**40** 1.6	**405** 15.9	**482 x 120** 19 x 4.7	**558 x 178** 22 x 7	4 x M24
150 **155** **160**	5 11/16 5 3/4 5 15/16 6	S10	**181** 7.126	**40** 1.6	**415** 16.3	**496 x 120** 19.5 x 4.7	**558 x 178** 22 x 7	4 x M24

LIGHT SERIES BEARING AND HOUSING

160 MM TO 350 MM (6 7⁄16 IN. TO 14 IN.)

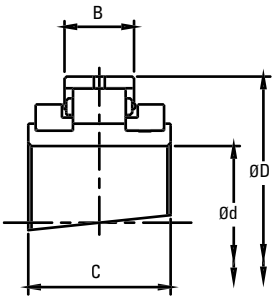

Expansion BX

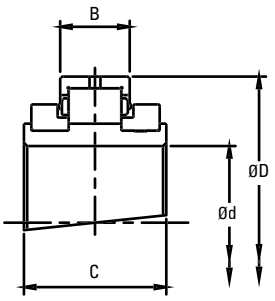

Retained BR

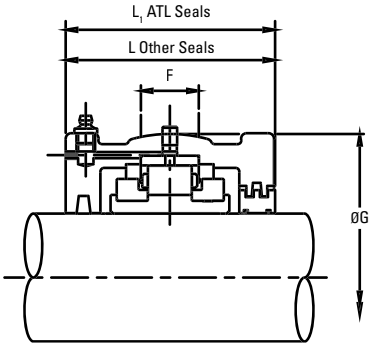

Shaft (d)		Reference		Bearings Ratings							Housing Reference						
		Add **BR** for Retained Add **BX** for Expansion e.g. LSE715BR		Dynamic C_r	Static C_{or}	Axial C_a	Max	D	B	C	ATL Seals Add **HRTL** for Retained Add **HXTL** for Expansion e.g. LS13HRTL	Other Seal Types Add **HR** for Retained Add **HX** for Expansion e.g. LS715HR		G	F	L	L_1
mm	in.			**kN** lb.	**kN** lb.	**kN** lb.	RPM	**mm** in.	**mm** in.	**mm** in.				**mm** in.	**mm** in.	**mm** in.	**mm** in.
160 **170A**	6 7⁄16 6 ½	LSM160 LSM170A	LSE607 LSE608	**583** 131064	**792** 178049	**33.00** 7419	1320	**273.05** 10.750	**60.30** 2.374	**109.00** 4.291	LS11	LSM160 LSM170A	LSE607 LSE608	**311.15** 12.250	**76** 3.0	**172** 6.8	**192** 7.6
170 **175** **180**	6 11⁄16 6 ¾ 6 15⁄16 7	LSM170 LSM175 LSM180	LSE611 LSE612 LSE615 LSE700	**524** 117800	**828** 186142	**36.40** 8183	1220	**285.75** 11.250	**55.50** 2.185	**109.00** 4.291	LS12	LSM170 LSM175 LSM180	LSE611 LSE612 LSE615 LSE700	**323.85** 12.750	**70** 2.8	**172** 6.8	**200** 7.9
190 **200**	7 ¼ 7 ½ 7 15⁄16 8	LSM190 LSM200	LSE704 LSE708 LSE715 LSE800	**614** 138033	**990** 222561	**41.00** 9217	1070	**311.15** 12.250	**60.30** 2.374	**109.00** 4.291	LS13	LSM190 LSM200	LSE704 LSE708 LSE715 LSE800	**358.78** 14.125	**86** 3.4	**172** 6.8	**200** 7.9
220 **230**	8 ½ 8 ⅞ 9	LSM220 LSM230	LSE808 LSE814 LSE900	**708** 159165	**1168** 262577	**49.00** 11016	930	**342.90** 13.500	**63.50** 2.500	**115.00** 4.528	LS14	LSM220 LSM230	LSE808 LSE814 LSE900	**387.35** 15.250	**82** 3.2	**178** 7.0	**216** 8.5
240 **250**	9 ½ 9 ¾ 10	LSM240 LSM250	LSE908 LSE912 LSE1000	**744** 167258	**1289** 289779	**57.80** 12994	820	**374.65** 14.750	**66.70** 2.626	**122.00** 4.803	LS15	LSM240 LSM250	LSE908 LSE912 LSE1000	**419.10** 16.500	**90** 3.5	**188** 7.4	**222** 8.7
260 **270** **280**	10 ½ 10 ¾ 11	LSM260 LSM270 LSM280	LSE1008 LSE1012 LSE1100	**848** 190638	**1502** 337663	**66.80** 15017	730	**406.40** 16.000	**69.00** 2.717	**128.00** 5.039	LS16	LSM260 LSM270 LSM280	LSE1008 LSE1012 LSE1100	**454.00** 17.874	**95** 3.7	**204** 8.0	**232** 9.1
300 **305**	11 ½ 12	LSM300 LSM305	LSE1108 LSE1200	**929** 208848	**1665** 374307	**78.20** 17580	650	**438.15** 17.250	**74.60** 2.937	**143.00** 5.630	LS17	LSM300 LSM305	LSE1108 LSE1200	**489.00** 19.252	**98** 3.9	**216** 8.5	**248** 9.8
320 **330**	12 ½ 13	LSM320 LSM330	LSE1208 LSE1300	**920** 206824	**1674** 376330	**89.00** 20008	590	**463.55** 18.250	**74.60** 2.937	**136.00** 5.354	LS18	LSM320 LSM330	LSE1208 LSE1300	**520.70** 20.500	**95** 3.7	**260** 10.2	–
340 **350**	14	LSM340 LSM350	LSE1400	**1022** 229755	**1965** 441745	**99.60** 22391	540	**488.95** 19.250	**74.60** 2.937	**136.00** 5.354	LS19	LSM340 LSM350	LSE1400	**546.10** 21.500	**98** 3.9	**260** 10.2	–

For triple labyrinth seal designations, please refer to page 32-34.

LIGHT SERIES SUPPORT
S11 - S19

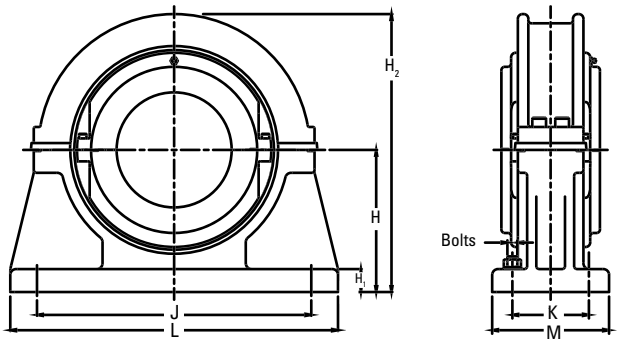

Shaft (d)		Support Reference	H	H_1	H_2	J x K	L x M	Bolts
mm	in.		**mm** in.	**mm** in.	**mm** in.	**mm** in.	**mm** in.	
160 **170A**	6 7/16 6 ½	S11	**213** 8.386	**32** 1.3	**430** 16.9	**368 x 114** 14.5 x 4.5	**508 x 178** 20 x 7	4 x M24
170 **175** **180**	6 11/16 6 ¾ 6 15/16 7	S12	**235** 9.252	**35** 1.4	**470** 18.5	**388 x 128** 15.3 x 5	**534 x 190** 21 x 7.5	4 x M24
190 **200**	7 ¼ 7 ½ 7 15/16 8	S13	**248** 9.764	**38** 1.5	**495** 19.5	**422 x 140** 16.6 x 5.5	**572 x 204** 22.5 x 8	4 x M24
220 **230**	8 ½ 8 7/8 9	S14	**270** 10.630	**40** 1.6	**540** 21.3	**460 x 140** 18.1 x 5.5	**636 x 216** 25 x 8.5	4 x M30
240 **250**	9 ½ 9 ¾ 10	S15	**292** 11.496	**44** 1.7	**585** 23.0	**502 x 140** 19.8 x 5.5	**686 x 228** 27 x 9	4 x M30
260 **270** **280**	10 ½ 10 ¾ 11	S16	**311** 12.244	**48** 1.9	**620** 24.4	**534 x 140** 21 x 5.5	**724 x 228** 28.5 x 9	4 x M30
300 **305**	11 ½ 12	S17	**343** 13.504	**50** 2.0	**685** 27.0	**584 x 178** 23 x 7	**762 x 254** 32 x 10	4 x M30
320 **330**	12 ½ 13	S18	**368** 14.488	**54** 2.1	**735** 28.9	**622 x 178** 24.5 x 7	**812 x 254** 32 x 10	4 x M36
340 **350**	14	S19	**387** 15.236	**57** 2.2	**775** 30.5	**654 x 166** 25.7 x 6.5	**850 x 254** 33.5 x 10	4 x M36

LIGHT SERIES BEARING AND HOUSING

360 MM TO 600 MM (15 IN. TO 24 IN.)

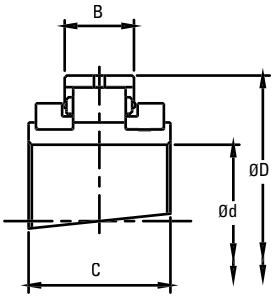

Expansion BX

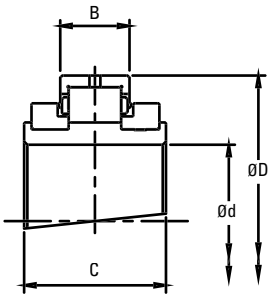

Retained BR

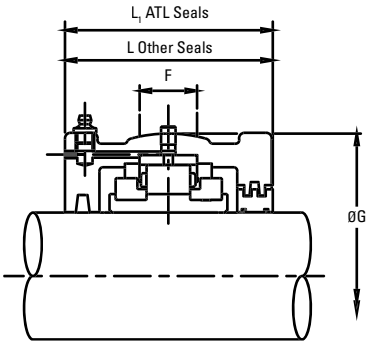

Shaft (d)		Reference		Bearings Ratings							Housing Reference						
		Add **BR** for Retained Add **BX** for Expansion e.g. LSM35BR		Dynamic C_r	Static C_{or}	Axial C_a	Max	D	B	C	ATL Seals Add **HRTL** for Retained Add **HXTL** for Expansion e.g. LS11HRTL	Other Seal Types Add **HR** for Retained Add **HX** for Expansion e.g. LSM35HR		G	F	L	L_1
mm	in.			**kN** lb.	**kN** lb.	**kN** lb.	RPM	**mm** in.	**mm** in.	**mm** in.				**mm** in.	**mm** in.	**mm** in.	**mm** in.
360 **380**	15	LSM360 LSM380	LSE1500	**1224** 275166	**2431** 546511	**110.40** 24819	500	**520.70** 20.500	**76.20** 3.000	**140.00** 5.512	LS20	LSM360 LSM380	LSE1500	**571.50** 22.500	**98** 3.9	**260** 10.2	–
400	16	LSM400	LSE1600	**1107** 248864	**2266** 509417	**115.60** 25988	460	**546.10** 21.500	**76.20** 3.000	**140.00** 5.512	LS21	LSM400	LSE1600	**603.30** 23.752	**102** 4.0	**280** 11.0	–
420	17	LSM420	LSE1700	**1146** 257631	**2418** 543588	**121.00** 27202	430	**571.50** 22.500	**76.20** 3.000	**140.00** 5.512	LS22	LSM420	LSE1700	**628.70** 24.752	**102** 4.0	**292** 11.5	–
440 **460**	18	LSM440 LSM460	LSE1800	**1185** 266399	**2469** 555053	**127.20** 28596	410	**596.90** 23.500	**76.20** 3.000	**140.00** 5.512	LS23	LSM440 LSM460	LSE1800	**650.90** 25.626	**4.3** 108	**304** 12.0	–
480	19	LSM480	LSE1900	**1348** 303042	**2965** 666559	**132.60** 29810	380	**628.65** 24.750	**81.00** 3.189	**144.00** 5.669	LS24	LSM480	LSE1900	**682.60** 26.874	**4.3** 108	**304** 12.0	–
500	20	LSM500	LSE2000	**1392** 312934	**3139** 705675	**137.80** 30979	360	**654.05** 25.750	**80.20** 3.157	**168.00** 6.614	LS25	LSM500	LSE2000	**717.60** 28.252	**114** 4.5	**304** 12.0	–
530	21	LSM530	LSE2100	**1431** 321702	**3316** 745466	**140.60** 31608	340	**692.15** 27.250	**81.00** 3.189	**168.00** 6.614	LS26	LSM530	LSE2100	**755.70** 29.752	**114** 4.5	**330** 13.0	–
560	22	LSM560	LSE2200	**1472** 330919	**3490** 784583	**142.40** 32013	330	**717.55** 28.250	**81.00** 3.189	**168.00** 6.614	LS27	LSM560	LSE2200	**781.10** 30.752	**114** 4.5	**336** 13.2	–
580	23	LSM580	LSE2300	**1616** 363291	**3841** 863491	**144.00** 32372	310	**749.00** 29.488	**84.10** 3.311	**172.00** 6.772	LS28	LSM580	LSE2300	**816.00** 32.126	**120** 4.7	**342** 13.5	–
600	24	LSM600	LSE2400	**1660** 373183	**4033** 906654	**146.80** 33002	300	**774.70** 30.500	**84.10** 3.311	**172.00** 6.772	LS29	LSM600	LSE2400	**841.40** 33.126	**120** 4.7	**342** 13.5	–

For triple labyrinth seal designations, please refer to page 32-34.

LIGHT SERIES SUPPORT
S20 - S29

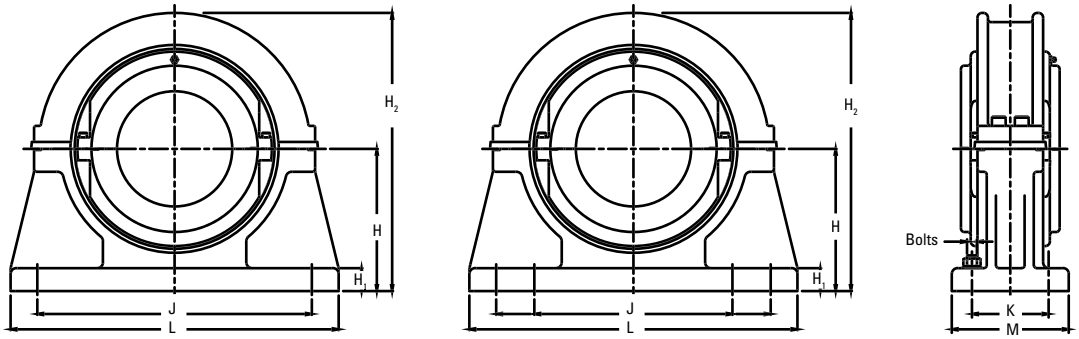

Shaft (d)		Support Reference	H	H_1	H_2	J x K	L x M	Bolts
mm	in.		**mm** in.	**mm** in.	**mm** in.	**mm** in.	**mm** in.	
360 **380**	15	S20	**397** 15.630	**60** 2.4	**795** 31.3	**676 x 166** 26.6 x 6.5	**902 x 254** 35.5 x 10	4 x M36
400	16	S21	**432** 17.008	**67** 2.6	**865** 34.1	**724 x 166** 28.5 x 6.5	**940 x 254** 37 x 10	4 x M36
420	17	S22	**445** 17.520	**67** 2.6	**890** 35.0	**756 x 166** 29.8 x 6.5	**966 x 254** 38 x 10	4 x M36
440 **460**	18	S23	**464** 18.268	**70** 2.8	**925** 36.4	**788 x 190** 31 x 7.5	**1042 x 280** 41 x 11	4 x M42
480	19	S24	**483** 19.016	**73** 2.9	**965** 38.0	**816 x 188** 32.1 x 7.4	**1092 x 304** 43 x 12	4 x M42
500	20	S25	**489** 19.252	**76** 3.0	**980** 38.6	**844 x 216** 33.2 x 8.5	**1092 x 304** 43 x 12	4 x M42
530	21	S26	**533** 20.984	**80** 3.1	**1065** 41.9	**904 x 206** 35.6 x 8.1	**1194 x 304** 47 x 12	4 x M42
560	22	S27	**552** 21.732	**83** 3.3	**1110** 43.7	**936 x 206** 36.9 x 8.1	**1220 x 304** 48 x 12	4 x M42
580	23	S28	**578** 22.756	**83** 3.3	**1156** 45.5	**1080 & 877 x 220** 42.5 & 34.5 x 8.7	**1372 x 304** 54 x 12	8 x M36
600	24	S29	**597** 23.504	**90** 3.5	**1200** 47.2	**1118 & 908 x 200** 44 & 35.7 x 7.9	**1372 x 304** 54 x 12	8 x M36

LIGHT SERIES SUPPORT
FLANGE UNITS 35 MM - 305 MM (1 3⁄16 IN. TO 12 IN.)

When faced with flat horizontal or vertical faces, flange units offer a simple mounting solution. As with pillow block supports, flange units are produced with spherical location to accommodate standard bearing housings and provide easy initial alignment of shaft and equipment.

To facilitate positive location of the flange to the surface, the rear face is recessed (dimensions N and V). This allows for a spigot (tolerance f8) to be located into the flange.

Bearing inspection is simply a matter of removing the top half of the flange and housing. Bearing replacement may also be achieved in the same manner if required.

When integrating flange units into new applications, it should be noted that a maximum radial load equivalent to 0.26 C_{or} is permissible. A maximum axial load of 0.25 C_a must also be taken into account for applications with thrust loading. Units for vertically oriented shafts may also need special consideration given to sealing arrangements.

As always, Timken will be happy to advise on any application issues.

Shaft (d)		Flange Reference	T	Bolts	R	P	H	N	V	L
mm	in.		**mm** in.		**mm** in.	**mm** in.	**mm** in.	**mm** in.	**mm** in.	**mm** in.
35 **40**	1 3⁄16 1 ¼ 1 7⁄16 1 ½	F01	**204** 8.0	4 x M12	**164** 6.5	**13** 0.5	**51** 2.0	**119.06** 4.687	**3** 0.1	**94** 3.7
45 **50**	1 11⁄16 1 ¾ 1 15⁄16 2	F02	**216** 8.5	4 x M12	**180** 7.1	**13** 0.5	**57** 2.2	**136.52** 5.375	**3** 0.1	**106** 4.2
55 **60** **65**	2 3⁄16 2 ¼ 2 7⁄16 2 ½	F03	**260** 10.2	4 x M12	**218** 8.6	**16** 0.6	**67** 2.6	**166.96** 571	**3** 0.1	**120** 4.7
70 **75**	2 11⁄16 2 ¾ 2 15⁄16 3	F04	**286** 11.3	4 x M12	**242** 9.5	**16** 0.6	**73** 2.9	**192.09** 7.563	**3** 0.1	**130** 5.1
80 **85** **90**	3 3⁄16 3 ¼ 3 7⁄16 3 ½	F05	**330** 13.0	4 x M16	**274** 10.8	**19** 0.7	**79** 3.1	**215.98** 500	**3** 0.1	**148** 5.8
100 **105**	3 11⁄16 3 ¾ 3 15⁄16 4	F06	**356** 14.0	4 x M16	**302** 11.9	**19** 0.7	**86** 3.4	**244.47** 9.625	**3** 0.1	**154** 6.1
110 **115**	4 3⁄16 4 ¼ 4 7⁄16 4 ½	F07	**382** 15.0	4 x M16	**334** 13.1	**22** 0.9	**92** 3.6	**276.22** 10.875	**3** 0.1	**164** 6.5
120 **125** **130**	4 11⁄16 4 ¾ 4 15⁄16 5	F08	**432** 17.0	4 x M24	**374** 14.7	**22** 0.9	**98** 3.9	**314.32** 12.375	**3** 0.1	**176** 6.9

For bearings and housings see pages 46-49.

contiued on next page

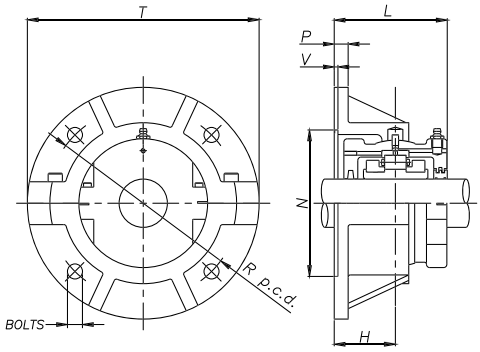

contiued from previous page

Shaft (d)		Flange Reference	T	Bolts	R	P	H	N	V	L
mm	in.		**mm** in.		**mm** in.	**mm** in.	**mm** in.	**mm** in.	**mm** in.	**mm** in.
135 **140**	5 3⁄16 5 1⁄4 5 7⁄16 5 1⁄2	F09	**444** 17.5	4 x M24	**384** 15.1	**25** 1.0	**98** 3.9	**317.51** 2.500	**3** 0.1	**182** 7.2
150 **155** **160A**	5 11⁄16 5 3⁄4 5 15⁄16 6	F10	**470** 18.5	4 x M24	**412** 16.2	**25** 1.0	**114** 4.5	**346.07** 13.625	**3** 0.1	**202** 8.0
160 **170A**	6 7⁄16 6 1⁄2	F11	**496** 19.5	4 x M24	**426** 16.8	**25** 1.0	**105** 4.1	**352.42** 13.875	**3** 0.1	**202** 8.0
170 **175** **180**	6 11⁄16 6 3⁄4 6 15⁄16 7	F12	**508** 20.0	4 x M24	**438** 17.2	**29** 1.1	**108** 4.3	**365.12** 14.375	**3** 0.1	**208** 8.2
190 **200**	7 1⁄4 7 1⁄2 7 15⁄16 8	F13	**534** 21.0	4 x M24	**474** 18.7	**32** 1.3	**108** 4.3	**400.05** 15.750	**3** 0.1	**208** 8.2
220 **230**	8 1⁄2 8 7⁄8 9	F14	**584** 23.0	4 x M30	**512** 20.2	**35** 1.4	**117** 4.6	**431.81** 7.000	**3** 0.1	**226** 8.9
240 **250**	9 1⁄2 9 3⁄4 10	F15	**610** 24.0	4 x M30	**542** 21.3	**35** 1.4	**117** 4.6	**463.55** 18.250	**3** 0.1	**228** 9.0
260 **270** **280**	10 1⁄2 10 3⁄4 11	F16	**660** 26.0	4 x M30	**584** 23.0	**38** 1.5	**124** 4.9	**504.82** 19.875	**3** 0.1	**240** 9.4
300 **305**	11 1⁄2 12	F17	**712** 28.0	4 x M30	**626** 24.6	**38** 1.5	**133** 5.2	**539.75** 21.250	**3** 0.1	**258** 10.2

For bearings and housings see pages 46-49.

LIGHT SERIES SUPPORT

TAKE-UP UNITS TT/TP 35 MM TO 155 MM (1 3⁄16 IN. TO 6 IN.)

This type of split unit can be found in use on materials handling equipment in many industries. Take-up units provide an efficient and readily accessible means of tensioning conveyor systems and large scale drives.

The units consist of either push-type or pull-type sliding supports into which standard housings and bearings may be mounted. When integrating take-up units into new applications, it should be noted that a maximum radial load equivalent to 0.3 C_{or} is permissible. As with all Timken units, a wide variety of sealing solutions may be applied dependant on the environment and application. Please contact a Timken engineer for assistance.

Shaft (d)		Support Reference		B	N	D	V	P	H	S	A	T	X	W	R	U	Y
		Tension-Type	Push-Type														
mm	in.			**mm** in.	**mm** in.	**mm** in.	**mm** in.	**mm** in.	**mm** in.	**mm** in.	**mm** in.	**mm** in.	**mm** in.	**mm** in.	**mm** in.	**mm** in.	**mm** in.
35 **40**	1 3⁄16 1 1⁄4 1 7⁄16 1 1⁄2	TT01	TP01	**102** 4.0	**172** 6.8	**153** 6.0	**76** 3.0	**14** 0.6	**29** 1.1	**25** 1.0	**32** 1.3	**216** 8.5	**20** 0.8	**25** 1.0	**24** 0.9	**5** 0.2	**13** 0.5
45 **50**	1 11⁄16 1 3⁄4 1 15⁄16 2	TT02	TP02	**114** 4.5	**204** 8.0	**178** 7.0	**88** 3.5	**16** 0.6	**29** 1.1	**29** 1.1	**128** 5.0	**242** 9.5	**24** 0.9	**25** 1.0	**25** 1.0	**5** 0.2	**13** 0.5
55 **60** **65**	2 3⁄16 2 1⁄4 2 7⁄16 2 1⁄2	TT03	TP03	**128** 5.0	**235** 9.3	**203** 8.0	**102** 4.0	**20** 0.8	**32** 1.3	**38** 1.5	**146** 5.7	**280** 11.0	**24** 0.9	**30** 1.2	**29** 1.1	**6** 0.2	**16** 0.6
70 **75**	2 11⁄16 2 3⁄4 2 15⁄16 3	TT04	TP04	**152** 6.0	**266** 10.5	**229** 9.0	**114** 4.5	**22** 0.9	**40** 1.6	**41** 1.6	**158** 6.2	**305** 12.0	**24** 0.9	**30** 1.2	**32** 1.3	**6** 0.2	**16** 0.5
80 **85** **90**	3 3⁄16 3 1⁄4 3 7⁄16 3 1⁄2	TT05	TP05	**190** 7.5	**318** 12.5	**280** 11.0	**140** 5.5	**22** 0.9	**40** 1.6	**51** 2.0	**190** 7.5	**368** 14.5	**30** 1.2	**38** 1.5	**35** 1.4	**6** 0.2	**16** 0.5

For bearings and housings see pages 46-49.

contiued on next page

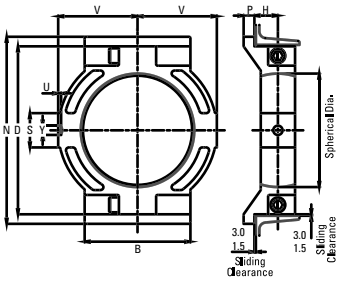

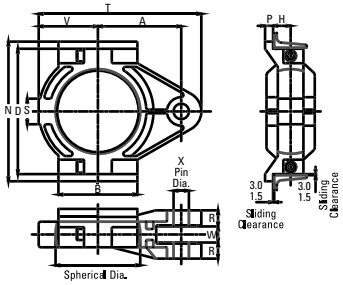

contiued from previous page

Shaft (d)		Support Reference		B	N	D	V	P	H	S	A	T	X	W	R	U	Y
		Tension-Type	Push-Type														
mm	in.			**mm** in.	**mm** in.	**mm** in.	**mm** in.	**mm** in.	**mm** in.	**mm** in.	**mm** in.	**mm** in.	**mm** in.	**mm** in.	**mm** in.	**mm** in.	**mm** in.
100 **105**	3 11⁄16 3 3⁄4 3 15⁄16 4	TT06	TP06	**204** 8.0	**342** 13.5	**305** 12.0	**152** 6.0	**22** 0.9	**43** 1.7	**51** 2.0	**210** 8.3	**414** 16.3	**36** 1.4	**44** 1.7	**35** 1.4	**6** 0.2	**19** 0.7
110 **115**	4 3⁄16 4 1⁄4 4 7⁄16 4 1⁄2	TT07	TP07	**216** 8.5	**382** 15.0	**343** 13.5	**162** 6.4	**22** 0.9	**48** 1.9	**70** 2.8	**228** 9.0	**445** 17.5	**42** 1.7	**44** 1.7	**41** 1.6	**6** 0.2	**19** 0.7
120 **125** **130**	4 11⁄16 4 3⁄4 4 15⁄16 5	TT08	TP08	**254** 10.0	**420** 16.5	**381** 15.0	**190** 7.5	**25** 1.0	**51** 2.0	**76** 3.0	**260** 10.2	**508** 20.0	**42** 1.7	**44** 1.7	**44** 1.7	**6** 0.2	**19** 0.7
135 **140**	5 3⁄16 5 1⁄4 5 7⁄16 5 1⁄2	TT09	TP09	**266** 10.5	**438** 17.2	**400** 15.7	**196** 7.7	**25** 1.0	**54** 2.1	**76** 3.0	**266** 10.5	**514** 20.2	**42** 1.7	**44** 1.7	**48** 1.9	**8** 0.3	**23** 0.9
150 **155** **160**	5 11⁄16 5 3⁄4 5 15⁄16 6	TT10	TP10	**266** 10.5	**464** 18.3	**426** 16.8	**204** 8.0	**25** 1.0	**57** 2.2	**86** 3.4	**280** 11.0	**546** 21.5	**48** 1.9	**50** 2.0	**51** 2.0	**8** 0.3	**23** 0.9

For bearings and housings see pages 46-49.

LIGHT SERIES SUPPORT
HANGER UNITS

Timken hanger units are the optimum solution for the support of screw conveyor shafts. The unit is comprised of a cast iron split housing into which expansion-type split cylindrical roller bearings are fitted. Provision of a drilled and tapped boss in one half of the housing allows for the unit to be mounted from the conveyor cross bracing or any other suitable surface. It is recommended that some form of swivel fixing be incorporated into the mounting arrangement to allow for static alignment.

Due to the arduous conditions often found in screw conveyor applications, correct seal selection is critical. Timken hanger units are available with many sealing variants, all of which can also be tailored to suit specific applications. When integrating hanging units into new applications, it should be noted that a maximum radial load equivalent to 0.3 C_{or} is permissible. Only suitable for an expansion (BX) type bearings. Please contact a Timken engineer for further information.

Hanger units have two seal grooves per side. They are supplied with double felt seals as standard. However, the standard seal groove will accept any combination of strip seal.

A further option is to have a tapped hole between the seal grooves at each end of the housing to incorporate a grease or air supply to purge the seals.

Shaft (d)		Support Reference		C	G	L	H	X[1]	Y
mm	in.	**mm**	in.	**mm** in.	**mm** in.	**mm** in.	**mm** in.	**mm** in.	**mm** in.
35 **40**	1 3/16 1 1/4 1 7/16 1 1/2	LSM35HG LSM40HG	LSE103HG LSE104HG LSE107HG LSE108HG	**55.0** 2.165	**106** 4.2	**108** 4.3	**66** 2.6	**M30** 1 - 8 UNC	**50** 2.0
45 **50**	1 11/16 1 3/4 1 15/16 2	LSM45HG LSM50HG	LSE111HG LSE112HG LSE115HG LSE200HG	**60.0** 2.362	**121** 4.8	**108** 4.3	**76** 3.0	**M30** 1 - 8 UNC	**50** 2.0
55 **60** **65**	2 3/16 2 1/4 2 7/16 2 1/2	LSM55HG LSM60HG LSM65HG	LSE203HG LSE204HG LSE207HG LSE208HG	**60.0** 2.362	**140** 5.5	**108** 4.3	**82** 3.2	**M30** 1 - 8 UNC	**50** 2.0
70 **75**	2 11/16 2 3/4 2 15/16 3	LSM70HG LSM75HG	LSE211HG LSE212HG LSE215HG LSE300HG	**65.0** 2.559	**162** 6.4	**130** 5.1	**92** 3.6	**M30** 1 - 8 UNC	**50** 2.0
80 **85** **90**	3 3/16 3 1/4 3 7/16 3 1/2	LSM80HG LSM85HG LSM90HG	LSE303HG LSE304HG LSE307HG LSE308HG	**75.0** 2.953	**187** 7.4	**146** 5.7	**114** 4.5	**M36** 1 1/2 - 6 UNC	**76** 3.0

[1] Hanger units with inch bore sizes have UNC mounting threads as standard. Hanger units with metric bore sizes have metric mounting threads as standard

contiued on next page

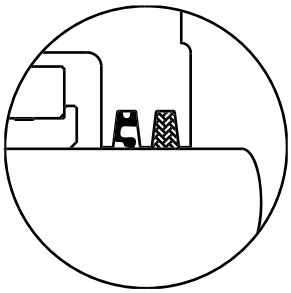

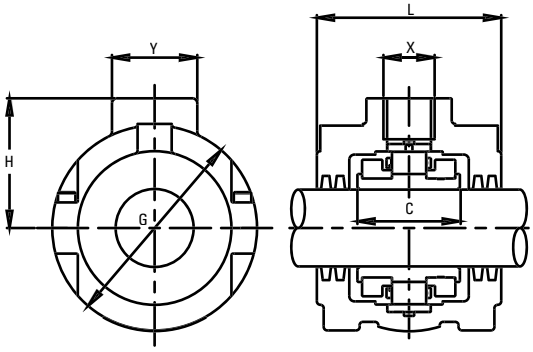

contiued from previous page

Shaft (d)		Support Reference		C	G	L	H	X[1]	Y
mm	in.			**mm** in.	**mm** in.	**mm** in.	**mm** in.	**mm** in.	**mm** in.
100 **105**	3 11/16 3 3/4 3 15/16 4	LSM100HG LSM105HG	LSE311HG LSE312HG LSE315HG LSE400HG	**85.0** 3.346	**210** 8.3	**152** 6.0	**128** 5.0	**M36** 1 1/2 - 6 UNC	**76** 3.0
110 **115**	4 3/16 4 1/4 4 7/16 4 1/2	LSM110HG LSM115HG	LSE403HG LSE404HG LSE407HG LSE408HG	**90.0** 3.543	**232** 9.1	**156** 6.1	**140** 5.5	**M36** 1 1/2 - 6 UNC	**76** 3.0
120 **125** **130**	4 11/16 4 3/4 4 15/16 5	LSM120 LSM125 LSM130	LSE411 LSE412 LSE415 LSE500	**95** 3.740	**276** 10.866	**162** 6.378	**156** 6.142	**M36** 1 1/2 - 6 UNC	**76** 2.992
135 **140**	5 3/16 5 1/4 5 7/16 5 1/2	LSM135 LSM140	LSE503 LSE504 LSE507 LSE508	**98.4** 3.874	**280** 11.024	**158** 6.220	**160** 6.299	**M36** 1 1/2 - 6 UNC	**75** 2.953

[1] Hanger units with inch bore sizes have UNC mounting threads as standard. Hanger units with metric bore sizes have metric mounting threads as standard

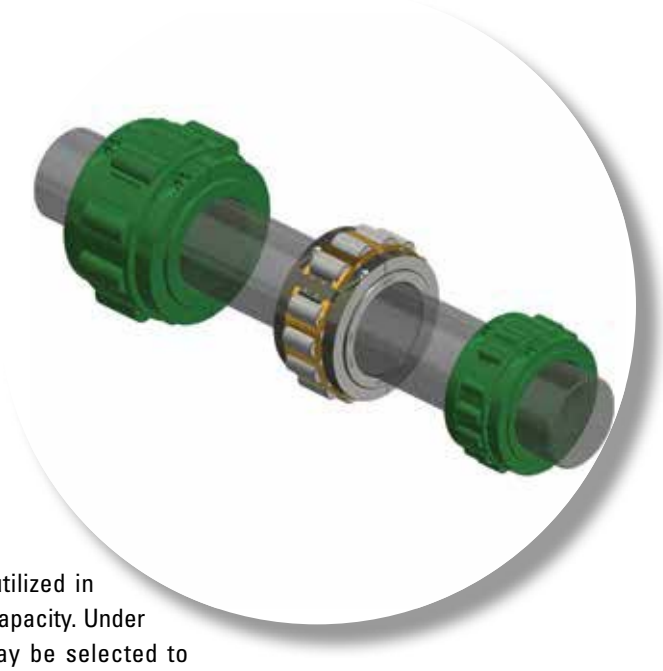

MEDIUM SERIES

Medium series bearing products can be utilized in applications requiring higher load-carrying capacity. Under normal conditions, medium series also may be selected to provide an extended bearing life when compared to light series. Medium series offers the same range of mounting and sealing solutions as light series, with the exception of hanger units. If a standard catalog product does not meet your requirements, a Timken engineer will be happy to provide help and advice on your application.

The following topics are covered within this section:

MEDIUM SERIES BEARING AND HOUSING

45 MM TO 155 MM (1 11⁄16 IN. TO 6 IN.)

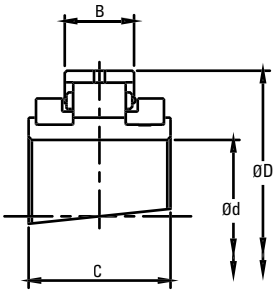

Expansion BX

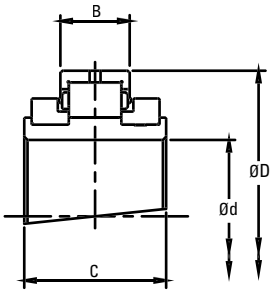

Retained BR

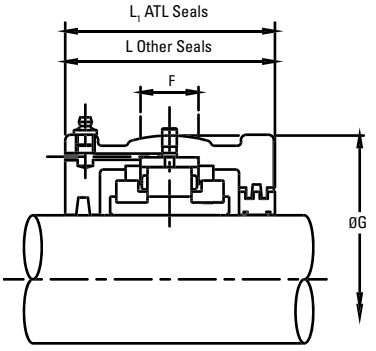

Shaft (d)		Reference		Bearings Ratings							Housing Reference						
		Add **BR** for Retained Add **BX** for Expansion e.g. MSM55BR		Dynamic C_r	Static C_{or}	Axial C_a	Max	D	B	C	ATL Seals Add **HRTL** for Retained Add **HXTL** for Expansion e.g. MS3HRTL	Other Seal Types Add **HR** for RetainedAdd **HX** for Expansion e.g. MSM55HR		G	F	L	L_1
mm	in.			**kN** lb.	**kN** lb.	**kN** lb.	RPM	**mm** in.	**mm** in.	**mm** in.				**mm** in.	**mm** in.	**mm** in.	**mm** in.
45 **50**	1 11⁄16 1 3⁄4 1 15⁄16 2	MSM45 MSM50	MSE111 MSE112 MSE115 MSE200	**121** 27202	**127** 28551	**6.20** 1394	4350	**107.95** 4.250	**35.00** 1.378	**67.50** 2.657	MS3	MSM45 MSM50	MSE111 MSE112 MSE115 MSE200	**134.94** 5.313	**32** 1.3	**112** 4.4	**114** 4.5
55 **60** **65**	2 3⁄16 2 1⁄4 2 7⁄16 2 1⁄2	MSM55 MSM60 MSM65	MSE203 MSE204 MSE207 MSE208	**168** 37768	**190** 42714	**8.80** 1978	3680	**127.00** 5.000	**38.90** 1.531	**72.30** 2.846	MS4	MSM55 MSM60 MSM65	MSE203 MSE204 MSE207 MSE208	**157.16** 6.187	**38** 1.5	**124** 4.9	**126** 5.0
70 **75**	2 11⁄16 2 3⁄4 2 15⁄16 3	MSM70 MSM75	MSE211 MSE212 MSE215 MSE300	**258** 58001	**300** 67443	**10.60** 2383	3080	**149.22** 5.875	**46.10** 1.815	**82.60** 3.252	MS5	MSM70 MSM75	MSE211 MSE212 MSE215 MSE300	**177.80** 7.000	**50** 2.0	**138** 5.4	**140** 5.5
80 **85** **90**	3 3⁄16 3 1⁄4 3 7⁄16 3 1⁄2	MSM80 MSM85 MSM90	MSE303 MSE304 MSE307 MSE308	**297** 66768	**353** 79358	**17.80** 4002	2520	**169.86** 6.687	**48.40** 1.906	**89.70** 3.531	MS6	MSM80 MSM85 MSM90	MSE303 MSE304 MSE307 MSE308	**203.20** 8.000	**50** 2.0	**152** 6.0	**154** 6.1
100 **105**	3 11⁄16 3 3⁄4 3 15⁄16 4	MSM100 MSM105	MSE311 MSE312 MSE315 MSE400	**388** 87226	**491** 110381	**25.00** 5620	2130	**193.68** 7.625	**51.60** 2.031	**92.10** 3.626	MS7	MSM100 MSM105	MSE311 MSE312 MSE315 MSE400	**231.78** 9.125	**64** 2.5	**144** 5.7	**146** 5.7
110 **115**	4 3⁄16 4 1⁄4 4 7⁄16 4 1⁄2	MSM110 MSM115	MSE403 MSE404 MSE407 MSE408	**454** 102063	**592** 133087	**31.20** 7014	1820	**228.60** 9.000	**57.20** 2.252	**100.00** 3.937	MS8	MSM110 MSM115	MSE403 MSE404 MSE407 MSE408	**266.70** 10.500	**76** 3.0	**160** 6.3	**162** 6.4
120 **125** **130**	4 11⁄16 4 3⁄4 4 15⁄16 5	MSM120 MSM125 MSM130	MSE411 MSE412 MSE415 MSE500	**525** 118025	**700** 157366	**38.20** 8588	1600	**254.00** 10.000	**63.50** 2.500	**114.30** 4.500	MS10	MSM120 MSM125 MSM130	MSE411 MSE412 MSE415 MSE500	**295.28** 11.625	**82** 3.2	**182** 7.2	**184** 7.2
135 **140**	5 3⁄16 5 1⁄4 5 7⁄16 5 1⁄2	MSM135 MSM140	MSE503 MSE504 MSE507 MSE508	**600** 134885	**817** 183669	**45.40** 10206	1450	**273.05** 10.750	**66.70** 2.626	**117.50** 4.626	MS30	MSM135 MSM140	MSE503 MSE504 MSE507 MSE508	**323.85** 12.750	**90** 3.5	**186** 7.3	**188** 7.4
150 **155** **160**	5 11⁄16 5 3⁄4 5 15⁄16 6	MSM150 MSM155 MSM160A	MSE511 MSE512 MSE515 MSE600	**730** 164111	**1034** 232453	**52.40** 11780	1320	**292.10** 11.500	**68.30** 2.689	**123.80** 4.874	MS31 MS32E0548	MSM150 MSM155 MSM160A	MSE511 MSE512 MSE515 MSE600	***336.55*** 13.250	***95*** 3.7	***202*** 8.0	***204*** 8.0

For triple labyrinth seal designations, please refer to page 32-34.

MEDIUM SERIES SUPPORT
S03 - S31

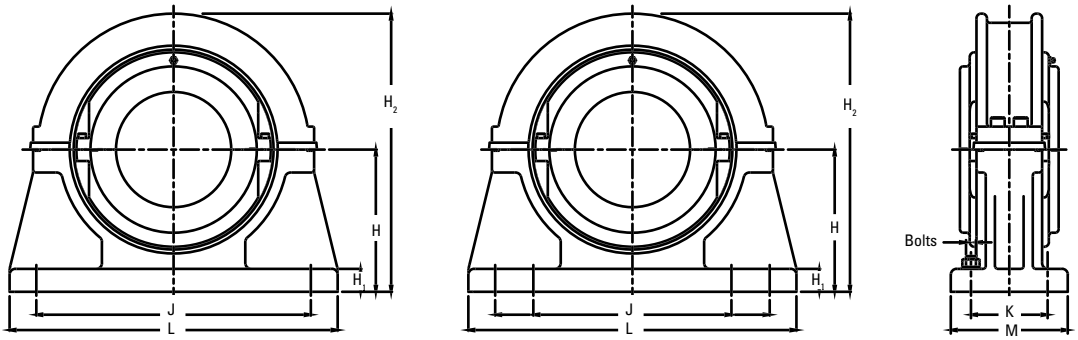

Shaft (d)		Support Reference	H	H_1	H_2	J x K	L x M	Bolts
mm	in.		**mm** in.	**mm** in.	**mm** in.	**mm** in.	**mm** in.	
45 **50**	1 11/16 1 3/4 1 15/16 2	S03	**80** 3.150	**32** 1.3	**180** 7.1	**234** 9.2	**280 x 70** 11 x 2.8	2 x M16
55 **60** **65**	2 3/16 2 1/4 2 7/16 2 1/2	S04	**95** 3.740	**38** 1.5	**208** 8.2	**270** 10.6	**330 x 76** 13 x 3	2 x M20
70 **75**	2 11/16 2 3/4 2 15/16 3	S05 S05-4B	**112** 4.409 **112** 4.409	**44** 1.7 **44** 1.7	**242** 9.53 **242** 9.53	**320** 12.6 **328 x 88.9** 12.9 x 3.5	**380 x 90** 15 x 3.5 **380 x 140** 15 x 5.51	2 x M20 4 x M20
80 **85** **90**	3 3/16 3 1/4 3 7/16 3 1/2	S06 S06-4B	**125** 4.921 **125** 4.921	**55** 2.17 **55** 2.17	**265** 10.43 **265** 10.43	**354** 13.9 **368 x 102** 14.5 x 4	**420 x 102** 16.5 x 4 **426 x 152** 16.8 x 6	2 x M24 4 x M20
100 **105**	3 11/16 3 3/4 3 15/16 4	S07 S07-4B	**143** 5.630 **143** 5.630	**60** 2.4 **60** 2.4	**303** 11.93 **303** 11.93	**392** 15.4 **412 x 114.3** 16.2 x 4.5	**466 x 120** 18.3 x 4.7 **476 x 172** 17.74 x 6.77	2 x M24 4 x M20
110 **115**	4 3/16 4 1/4 4 7/16 4 1/2	S08	**162** 6.378	**38** 1.5	**372** 14.6	**450 x 120** 17.7 x 4.7	**508 x 178** 20 x 7	4 x M24
120 **125** **130**	4 11/16 4 3/4 4 15/16 5	S10	**181** 7.126	**40** 1.6	**415** 16.3	**496 x 120** 19.5 x 4.7	**558 x 178** 22 x 7	4 x M24
135 **140**	5 3/16 5 1/4 5 7/16 5 1/2	S30	**203** 7.992	**50** 2.0	**460** 18.1	**546 x 120** 21.5 x 4.7	**610 x 178** 24 x 7	4 x M24
150 **155** **160**	5 11/16 5 3/4 5 15/16 6	S31	**210** 8.268	**50** 2.0	**470** 18.5	**558 x 128** 22 x 5	**636 x 204** 25 x 8	4 x M24

MEDIUM SERIES BEARING AND HOUSING

160 MM TO 360 MM (6 7⁄16 IN. TO 14 IN.)

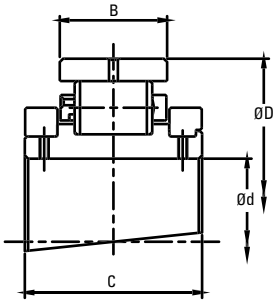

Expansion BX

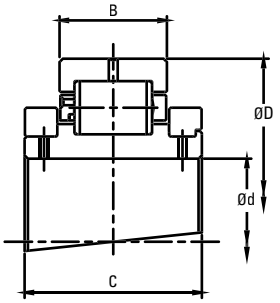

Retained BR

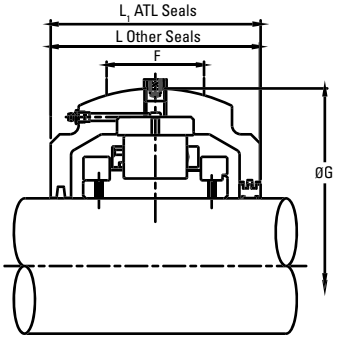

Shaft (d)		Reference		Bearings Ratings							Housing Reference						
		Add **BR** for Retained Add **BX** for Expansion e.g. MSM160BR		Dynamic C_r	Static C_{or}	Axial C_a	Max	D	B	C	ATL Seals Add **HRTL** for Retained Add **HXTL** for Expansion e.g. MS3HRTL	Other Seal Types Add **HR** for Retained Add **HX** for Expansion e.g. MSM160HR		G	F	L	L_1
mm	in.			**kN** lb.	**kN** lb.	**kN** lb.	RPM	**mm** in.	**mm** in.	**mm** in.				**mm** in.	**mm** in.	**mm** in.	**mm** in.
160 **170**	6 7⁄16 6 ½ 6 11⁄16 6 ¾	MSM160 MSM170	MSE607 MSE608 MSE611 MSE612	**842** 189289	**1175** 264151	**61.40** 13803	1200	**317.50** 12.500	**83.30** 3.280	**140.00** 5.512	MS32	MSM160 MSM170	MSE607 MSE608 MSE611 MSE612	**368.30** 14.500	**95** 3.7	**206** 8.1	**232** 9.1
175 **180**	6 15⁄16 7	MSM175 MSM180	MSE615 MSE700	**927** 208398	**1357** 305066	**71.20** 16006	1120	**330.20** 13.000	**83.30** 3.280	**140.00** 5.512	MS33	MSM175 MSM180	MSE615 MSE700	**381.00** 15.000	**95** 3.7	**222** 8.7	**242** 9.5
190 **200**	7 ¼ 7 ½ 7 15⁄16 8	MSM190 MSM200	MSE704 MSE708 MSE715 MSE800	**1013** 227732	**1516** 340810	**80.00** 17985	960	**368.30** 14.500	**90.50** 3.563	**156.00** 6.142	MS34	MSM190 MSM200	MSE704 MSE708 MSE715 MSE800	**425.50** 16.752	**105** 4.1	**235** 9.3	**258** 10.2
220 **230**	8 ½ 8 ⅞ 9	MSM220 MSM230	MSE808 MSE814 MSE900	**1138** 255833	**1668** 374981	**89.80** 20188	850	**393.70** 15.500	**90.50** 3.563	**163.00** 6.417	MS35	MSM220 MSM230	MSE808 MSE814 MSE900	**457.20** 18.000	**110** 4.3	**242** 9.5	**274** 10.8
240 **250** **260**	9 ½ 9 ¾ 10	MSM240 MSM250 MSM260	MSE908 MSE912 MSE1000	**1354** 304391	**2117** 475921	**98.80** 22211	750	**431.80** 17.000	**96.80** 3.811	**170.00** 6.693	MS36 MS36E0548	MSM240 MSM250 MSM260	MSE908 MSE912 MSE1000	**495.30** 19.500 –	**118** 4.6 –	**248** 9.8 –	**280** 11.0 –
270 **280**	10 ½ 10 ¾ 11	MSM270 MSM280	MSE1008 MSE1012 MSE1100	**1476** 331818	**2357** 529875	**113.80** 25583	670	**463.55** 18.250	**101.60** 4.000	**186.00** 7.323	MS37	MSM270 MSM280	MSE1008 MSE1012 MSE1100	**527.10** 20.752	**130** 5.1	**264** 10.4	**300** 11.8
300 **305**	11 ½ 12	MSM300 MSM305	MSE1108 MSE1200	**1587** 356772	**2644** 594395	**129.00** 29000	610	**495.30** 19.500	**103.20** 4.063	**193.00** 7.598	MS38	MSM300 MSM305	MSE1108 MSE1200	**552.50** 21.752	**128** 5.0	**268** 10.6	**306** 12.0
320 **330**	12 ½ 13	MSM320 MSM330	MSE1208 MSE1300	**1723** 387346	**2922** 656892	**144.20** 32417	550	**527.05** 20.750	**106.40** 4.189	**192.00** 7.559	MS39	MSM320 MSM330	MSE1208 MSE1300	**587.40** 23.126	**128** 5.0	**298** 11.7	–
340 **350** **360**	14	MSM340 MSM350 MSM360	MSE1400	**1989** 447145	**3403** 765025	**159.20** 35790	500	**565.15** 22.250	**115.90** 4.563	**200.00** 7.874	MS40	MSM340 MSM350 MSM360	MSE1400	**628.70** 24.752	**146** 5.7	**305** 12.0	–

For triple labyrinth seal designations, please refer to page 32-34.

MEDIUM SERIES SUPPORT
S32 - S40

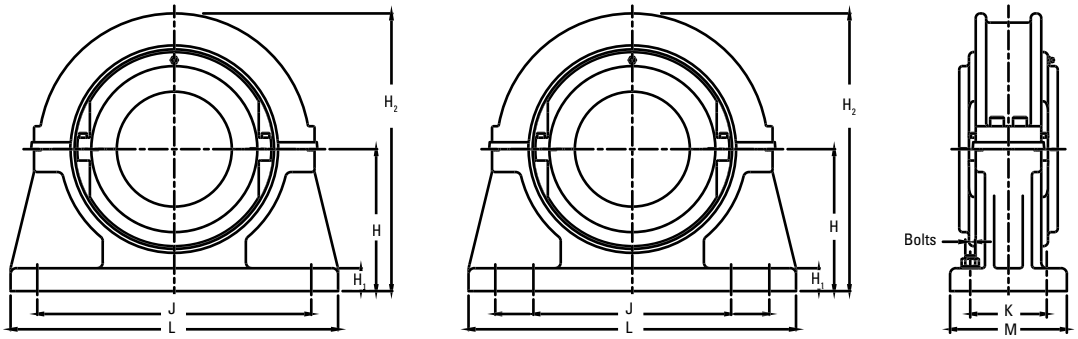

Shaft (d)		Support Reference	H	H_1	H_2	J x K	L x M	Bolts
mm	in.		**mm** in.	**mm** in.	**mm** in.	**mm** in.	**mm** in.	
160 **170**	6 7/16 6 ½	S32	**267** 10.512	**44** 1.7	**535** 21.1	**448 x 172** 17.6 x 6.8	**596 x 242** 23.5 x 9.5	4 x M30
175 **180**	6 11/16 6 ¾ 6 15/16 7	S33	**273** 10.748	**44** 1.7	**545** 21.5	**458 x 166** 18 x 6.5	**636 x 242** 25 x 9.5	4 x M30
190 **200**	7 ¼ 7 ½ 7 15/16 8	S34	**305** 12.008	**50** 2.0	**610** 24.0	**508 x 190** 20 x 7.5	**686 x 266** 27 x 10.5	4 x M30
220 **230**	8 ½ 8 ⅞ 9	S35	**324** 12.756	**50** 2.0	**650** 25.6	**550 x 190** 21.7 x 7.5	**750 x 280** 29.5 x 11	4 x M30
240 **250** **260**	9 ½ 9 ¾ 10	S36	**356** 14.016	**54** 2.1	**710** 28.0	**596 x 204** 23.5 x 8	**812 x 292** 32 x 11.5	4 x M36
270 **280**	10 ½ 10 ¾ 11	S37	**378** 14.882	**60** 2.4	**760** 29.9	**736 & 534 x 254** 29 & 21 x 10	**914 x 330** 36 x 13	8 x M30
300 **305**	11 ½ 12	S38	**394** 15.512	**60** 2.4	**790** 31.1	**768 & 566 x 254** 30.2 & 22.3 x 10	**958 x 330** 37.7 x 13	8 x M30
320 **330**	12 ½ 13	S39	**419** 16.496	**64** 2.5	**840** 33.1	**812 & 610 x 210** 32 & 24 x 8.3	**1016 x 292** 40 x 11.5	8 x M30
340 **350** **360**	14	S40	**451** 17.756	**67** 2.6	**900** 35.4	**864 & 660 x 280** 34 & 26 x 11	**1092 x 368** 43 x 14.5	8 x M36

MEDIUM SERIES BEARING AND HOUSING

380 MM TO 600 MM (15 IN. TO 24 IN.)

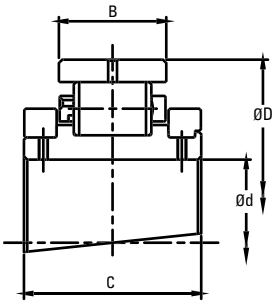

Expansion BX

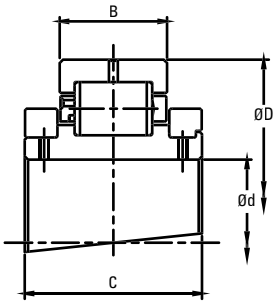

Retained BR

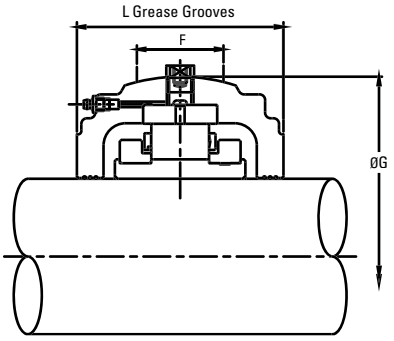

Shaft (d)		Reference		Bearings Ratings							Housing Reference						
		Add **BR** for Retained Add **BX** for Expansion e.g. MS1700BR		Dynamic C_r	Static C_{or}	Axial C_a	Max	D	B	C	ATL Seals Add **HRTL** for Retained Add **HXTL** for Expansion e.g. MS34HRTL	Other Seal Types Add **HR** for Retained Add **HX** for Expansion e.g. MSE1700HR		G	F	L	L_1
mm	in.			**kN** lb.	**kN** lb.	**kN** lb.	RPM	**mm** in.	**mm** in.	**mm** in.				**mm** in.	**mm** in.	**mm** in.	**mm** in.
380	15	MSM380	MSE1500	**1931** 434106	**3522** 791778	**174.40** 39207	460	**584.20** 23.000	**111.10** 4.374	**200.00** 7.874	MS41	MSM360 MSM380	MSE1500	**647.70** 25.500	**146** 5.7	**305** 12.0	–
400	16	MSM400	MSE1600	**2105** 473223	**3793** 852701	**188.40** 42354	430	**615.95** 24.250	**115.90** 4.563	**200.00** 7.874	MS42	MSM400	MSE1600	**685.80** 27.000	**146** 5.7	**324** 12.8	–
420	17	MSM420	MSE1700	**2324** 522456	**4164** 936105	**202.00** 45411	400	**647.70** 25.500	**119.10** 4.689	**200.00** 7.874	MS43	MSM420	MSE1700	**717.60** 28.252	**146** 5.7	**350** 13.8	–
440 **460**	18	MSM440 MSM460	MSE1800	**2215** 497952	**4183** 940376	**216.00** 48559	380	**666.75** 26.250	**115.90** 4.563	**200.00** 7.874	MS44	MSM440 MSM460	MSE1800	**733.40** 28.874	**146** 5.7	**350** 13.8	–
480	19	MSM480	MSE1900	**2445** 549658	**4594** 1032773	**230.00** 51706	360	**698.50** 27.500	**119.10** 4.689	**223.00** 8.780	MS45	MSM480	MSE1900	**762.00** 30.000	**146** 5.7	**368** 14.5	–
500	20	MSM500	MSE2000	**2453** 551456	**5054** 1137229	**244.00** 54853	340	**717.55** 28.250	**115.90** 4.563	**226.00** 8.898	MS46	MSM500	MSE2000	**787.40** 31.000	**146** 5.7	**368** 14.5	–
530	21	MSM530	MSE2100	**2702** 607434	**5467** 1230020	**258.00** 58001	330	**762.00** 30.000	**119.10** 4.689	**229.00** 9.016	MS47	**MSM530**	MSE2100	**831.90** 32.752	**150** 5.9	**368** 14.5	–
560	22	MSM560	MSE2200	**2851** 640930	**5794** 1303567	**272.00** 61148	310	**793.75** 31.250	**122.20** 4.811	**233.00** 9.173	MS48	MSM560	MSE2200	**866.80** 34.126	**152** 6.0	**374** 14.7	–
580	23	MSM580	MSE2300	**2982** 670380	**6231** 1402056	**286.00** 64295	300	**812.80** 32.000	**119.10** 4.689	**232.00** 9.134	MS49	MSM580	MSE2300	**883.00** 34.764	**152** 6.0	**374** 14.7	–
600	24	MSM600	MSE2400	**2972** 668132	**6243** 1404650	**300.00** 67443	290	**838.20** 33.000	**119.10** 4.689	**214.00** 8.425	MS50	MSM600	MSE2400	**914.40** 36.000	**152** 6.0	**388** 15.3	–

For triple labyrinth seal designations, please refer to page 32-34.

MEDIUM SERIES SUPPORT
S41 - S50

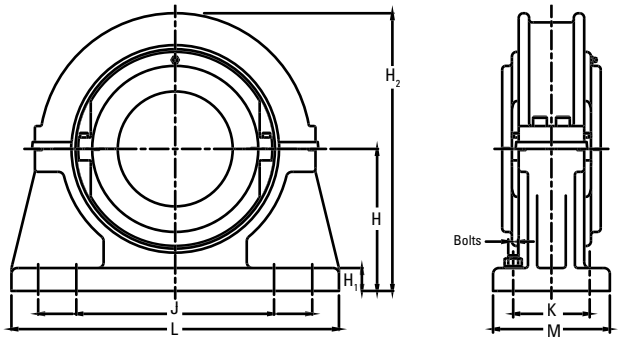

Shaft (d)		Support Reference	H	H_1	H_2	J x K	L x M	Bolts
mm	in.		**mm** in.	**mm** in.	**mm** in.	**mm** in.	**mm** in.	
380	15	S41	**464** 18.268	**67** 2.6	**925** 36.4	**886 & 682 x 280** 34.9 & 26.9 x 11	**1092 x 368** 43 x 14.5	8 x M36
400	16	S42	**495** 19.488	**70** 2.8	**990** 39.0	**934 & 730 x 280** 36.8 & 28.7 x 11	**1168 x 368** 46 x 14.5	8 x M36
420	17	S43	**514** 20.236	**70** 2.8	**1030** 40.6	**972 & 768 x 280** 38.3 & 30.2 x 11	**1194 x 368** 47 x 14.5	8 x M36
440 460	18	S44	**533** 20.984	**73** 2.9	**1070** 42.1	**996 & 788 x 280** 39.2 & 31 x 11	**1244 x 368** 49 x 14.5	8 x M36
480	19	S45	**552** 21.732	**76** 3.0	**1110** 43.7	**1042 & 812 x 280** 41 & 32 x 11	**1270 x 368** 50 x 14.5	8 x M36
500	20	S46	**572** 22.520	**80** 3.1	**1145** 45.1	**1074 & 844 x 280** 42.3 & 33.2 x 11	**1296 x 368** 51 x 14.5	8 x M36
530	21	S47	**594** 23.386	**83** 3.3	**1180** 46.5	**1118 & 890 x 280** 44 & 35 x 11	**1398 x 368** 55 x 14.5	8 x M36
560	22	S48	**616** 24.252	**86** 3.4	**1230** 48.4	**1158 & 930 x 280** 45.6 & 36.6 x 11	**1422 x 382** 56 x 15	8 x M42
580	23	S49	**635** 25.000	**89** 3.5	**1270** 50.0	**1187 & 959 x 280** 46.7 & 37.8 x 11	**1448 x 382** 57 x 15	8 x M42
600	24	S50	**673** 26.496	**92** 3.6	**1345** 53.0	**1238 & 1010 x 280** 48.7 & 39.8 x 11	**1524 x 382** 60 x 15	8 x M42

MEDIUM SERIES SUPPORT
FLANGE UNITS 45 MM TO 305 MM (1 11⁄16 IN. TO 12 IN.)

When faced with flat horizontal or vertical faces, flange units offer a simple mounting solution. As with pillow block supports, flange units are produced with spherical location to accommodate standard bearing housings and provide easy initial alignment of shaft and equipment.

To facilitate positive location of the flange to the surface, the rear face is recessed (dimensions N and V). This allows for a spigot (tolerance f8) to be located into the flange.

Bearing inspection is simply a matter of removing the top half of the flange and housing. Bearing replacement also may be achieved in the same manner if required.

When integrating flange units into new applications, it should be noted that a maximum radial load equivalent to 0.26 C_{or} is permissible. A maximum axial load of 0.25 C_a also must be taken into account for applications with thrust loading. Units for vertically oriented shafts may also need special consideration given to sealing arrangements.

Contact a Timken engineer for any application issues.

Shaft (d)		Flange Reference	T	Bolts	R	P	H	N	V	L
mm	in.		**mm** in.		**mm** in.	**mm** in.	**mm** in.	**mm** in.	**mm** in.	**mm** in.
45 **50**	1 11⁄16 1 3⁄4 1 15⁄16 2	F03	**260** 10.2	4 x M12	**218** 8.6	**16** 0.6	**67** 2.6	**166.9** 6.571	**3** 0.1	**124** 4.9
55 **60** **65**	2 3⁄16 2 1⁄4 2 7⁄16 2 1⁄2	F04	**286** 11.3	4 x M12	**242** 9.5	**16** 0.6	**73** 2.9	**192.09** 7.563	**3** 0.1	**136** 5.4
70 **75**	2 11⁄16 2 3⁄4 2 15⁄16 3	F05	**330** 13.0	4 x M16	**274** 10.8	**19** 0.7	**79** 3.1	**215.9** 8.500	**3** 0.1	**150** 5.9
80 **85** **90**	3 3⁄16 3 1⁄4 3 7⁄16 3 1⁄2	F06	**356** 14.0	4 x M16	**302** 11.9	**19** 0.7	**86** 3.4	**244.47** 9.625	**3** 0.1	**164** 6.5
100 **105**	3 11⁄16 3 3⁄4 3 15⁄16 4	F07	**382** 15.0	4 x M16	**334** 13.1	**22** 0.9	**92** 3.6	**276.22** 10.875	**3** 0.1	**166** 6.5
110 **115**	4 3⁄16 4 1⁄4 4 7⁄16 4 1⁄2	F08	**432** 17.0	4 x M24	**374** 14.7	**22** 0.9	**98** 3.9	**314.32** 12.375	**3** 0.1	**180** 7.1
120 **125** **130**	4 11⁄16 4 3⁄4 4 15⁄16 5	F10	**470** 18.5	4 x M24	**412** 16.2	**25** 1.0	**114** 4.5	**346.07** 13.625	**3** 0.1	**206** 8.1
135 **140**	5 3⁄16 5 1⁄4 5 7⁄16 5 1⁄2	F30	**508** 20.0	4 x M24	**444** 17.5	**25** 1.0	**114** 4.5	**377.82** 14.875	**3** 0.1	**208** 8.2

For bearings and housings see pages 60, 62 and 64.

contiued on next page

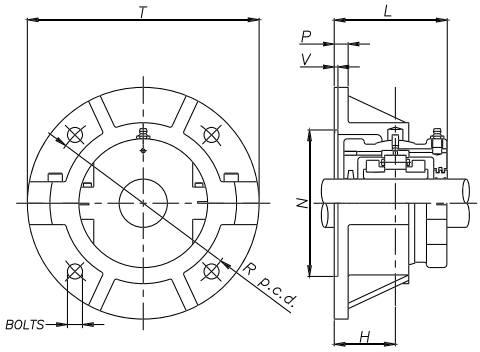

contiued from previous page

Shaft (d)		Flange Reference	T	Bolts	R	P	H	N	V	L
mm	in.		**mm** in.		**mm** in.	**mm** in.	**mm** in.	**mm** in.	**mm** in.	**mm** in.
150 **155** **160A**	5 11/16 5 3/4 5 15/16 6	F31	**534** 21.0	4 x M24	**466** 18.3	**25** 1.0	**124** 4.9	**393.70** 15.500	**3** 0.1	**226** 8.9
160 **170**	6 7/16 6 1/2	F32	**584** 23.0	4 x M30	**508** 20.0	**29** 1.1	**124** 4.9	**428.62** 16.875	**5** 0.2	**240** 9.4
175 **180**	6 11/16 6 3/4 6 15/16 7	F33	**596** 23.5	4 x M30	**524** 20.6	**32** 1.3	**130** 5.1	**444.50** 17.500	**5** 0.2	**252** 9.9
190 **200**	7 1/4 7 1/2 7 15/16 8	F34	**648** 25.5	4 x M30	**572** 22.5	**32** 1.3	**137** 5.4	**492.12** 19.375	**5** 0.2	**266** 10.5
220 **230**	8 1/2 8 7/8 9	F35	**712** 28.0	4 x M36	**620** 24.4	**35** 1.4	**146** 5.7	**527.05** 20.750	**5** 0.2	**284** 11.2
240 **250** **260**	9 1/2 9 3/4 10	F36	**736** 29.0	4 x M36	**660** 26.0	**38** 1.5	**149** 5.9	**568.32** 22.375	**5** 0.2	**290** 11.4
270 **280**	10 1/2 10 3/4 11	F37	**762** 30.0	8 x M30	**682** 26.9	**38** 1.5	**159** 6.3	**603.25** 23.750	**5** 0.2	**310** 12.2
300 **305**	11 1/2 12	F38	**788** 31.0	8 x M30	**708** 27.9	**41** 1.6	**162** 6.4	**628.65** 24.750	**5** 0.2	**316** 12.4

MEDIUM SERIES SUPPORT
TAKE-UP UNITS TT/TP 45 MM TO 155 MM (1 11⁄16 IN. TO 6 IN.)

This type of split unit can be found in use on materials handling equipment in many industries. Take-up units provide an efficient and readily accessible means of tensioning conveyor systems and large scale drives.

The units consist of either push-type or pull-type sliding supports into which standard housings and bearings may be mounted. When integrating take-up units into new applications, it should be noted that a maximum radial load equivalent to 0.3 C_{or} is permissible. As with all Timken units, a wide variety of sealing solutions may be applied dependant on the environment and application. Please contact a Timken engineer for assistance.

Shaft (d)		Support Reference		B	N	D	V	P	H	S	A	T	X	W	R	U	Y
		Tension-Type	Push-Type														
mm	in.			**mm** in.	**mm** in.	**mm** in.	**mm** in.	**mm** in.	**mm** in.	**mm** in.	**mm** in.	**mm** in.	**mm** in.	**mm** in.	**mm** in.	**mm** in.	**mm** in.
45 **50**	1 11⁄16 1 3⁄4 1 15⁄16 2	TT03	TP03	**128** 5.0	**235** 9.3	**203** 8.0	**102** 4.0	**20** 0.8	**32** 1.3	**38** 1.5	**146** 5.7	**280** 11.0	**24** 0.9	**30** 1.2	**29** 1.1	**6** 0.2	**16** 0.6
55 **60** **65**	2 3⁄16 2 1⁄4 2 7⁄16 2 1⁄2	TT04	TP04	**152** 6.0	**266** 10.5	**229** 9.0	**114** 4.5	**22** 0.9	**40** 1.6	**41** 1.6	**158** 6.2	**305** 12.0	**24** 0.9	**30** 1.2	**32** 1.3	**6** 0.2	**16** 0.6
70 **75**	2 11⁄16 2 3⁄4 2 15⁄16 3	TT05	TP05	**190** 7.5	**318** 12.5	**280** 11.0	**140** 5.5	**22** 0.9	**40** 1.6	**51** 2.0	**190** 7.5	**368** 14.5	**30** 1.2	**38** 1.5	**35** 1.4	**6** 0.2	**16** 0.6
80 **85** **90**	3 3⁄16 3 1⁄4 3 7⁄16 3 1⁄2	TT06	TP06	**204** 8.0	**342** 13.5	**305** 12.0	**152** 6.0	**22** 0.9	**43** 1.7	**51** 2.0	**210** 8.3	**414** 16.3	**36** 1.4	**44** 1.7	**35** 1.4	**6** 0.2	**19** 0.7
100 **105**	3 11⁄16 3 3⁄4 3 15⁄16 4	TT07	TP07	**216** 8.5	**382** 15.0	**343** 13.5	**162** 6.4	**22** 0.9	**48** 1.9	**70** 2.8	**228** 9.0	**445** 17.5	**42** 1.7	**44** 1.7	**41** 1.6	**6** 0.2	**19** 0.7

For bearings and housings see pages 60, 62 and 64.

contiued on next page

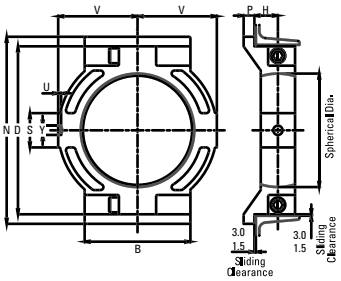

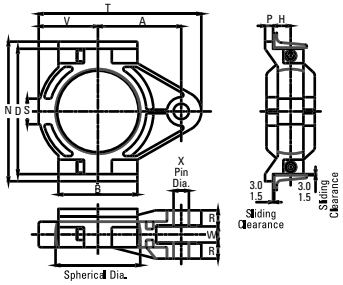

contiued from previous page

Shaft (d)		Support Reference		B	N	D	V	P	H	S	A	T	X	W	R	U	Y
		Tension-Type	Push-Type														
mm	in.			**mm** in.	**mm** in.	**mm** in.	**mm** in.	**mm** in.	**mm** in.	**mm** in.	**mm** in.	**mm** in.	**mm** in.	**mm** in.	**mm** in.	**mm** in.	**mm** in.
110 **115**	4 3⁄16 4 1⁄4 4 7⁄16 4 1⁄2	TT08	TP08	**254** 10.0	**420** 16.5	**381** 15.0	**190** 7.5	**25** 1.0	**51** 2.0	**76** 3.0	**260** 10.2	**508** 20.0	**42** 1.7	**44** 1.7	**44** 1.7	**6** 0.2	**19** 0.7
120 **125** **130**	4 11⁄16 4 3⁄4 4 15⁄16 5	TT10	TP10	**266** 10.5	**464** 18.3	**426** 16.8	**204** 8.0	**25** 1.0	**57** 2.2	**86** 3.4	**280** 11.0	**546** 21.5	**48** 1.9	**50** 2.0	**51** 2.0	**8** 0.3	**23** 0.9
135 **140**	5 3⁄16 5 1⁄4 5 7⁄16 5 1⁄2	TT30	TP30	**280** 11.0	**502** 19.8	**464** 18.3	**222** 8.7	**25** 1.0	**60** 2.4	**92** 3.6	**298** 11.7	**584** 23.0	**48** 1.9	**50** 2.0	**54** 2.1	**8** 0.3	**23** 0.9
150 **155** **160**	5 11⁄16 5 3⁄4 5 15⁄16 6	TT31	TP31	**305** 12.0	**528** 20.8	**489** 19.3	**235** 9.3	**25** 1.0	**64** 2.5	**92** 3.6	**312** 12.3	**616** 24.3	**48** 1.9	**50** 2.0	**57** 2.2	**10** 0.4	**26** 1.0

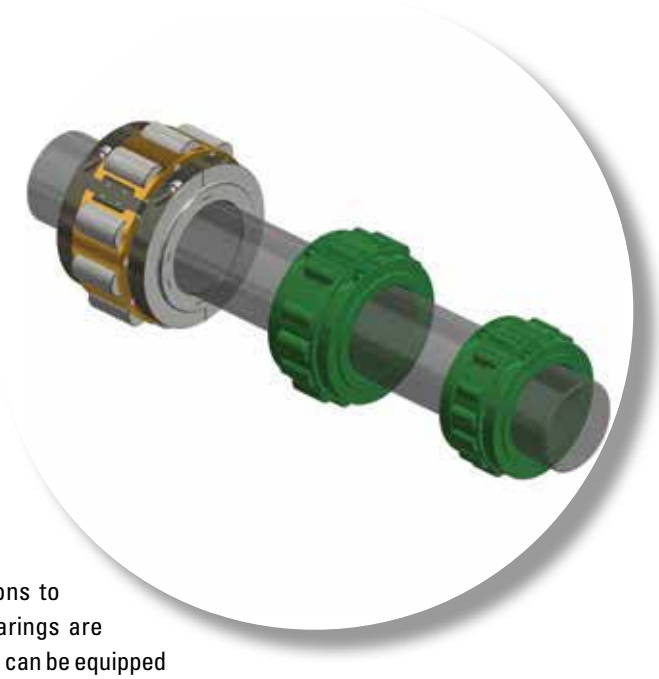

HEAVY SERIES

Heavy series bearing products offer solutions to the most demanding of load conditions. Bearings are supported by robust and durable mountings and can be equipped with a variety of sealing solutions. If a standard catalog product does not meet your requirements, a Timken engineer will be happy to provide help and advice on your application.

The following topics are covered within this section:

HEAVY SERIES BEARING AND HOUSING

100 MM TO 260 MM (3 11⁄16 IN. TO 10 IN.)

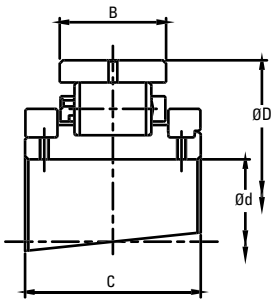

Expansion BX

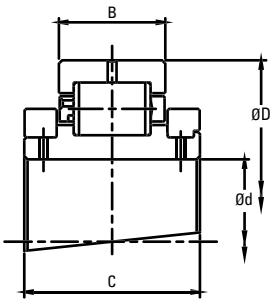

Retained BR

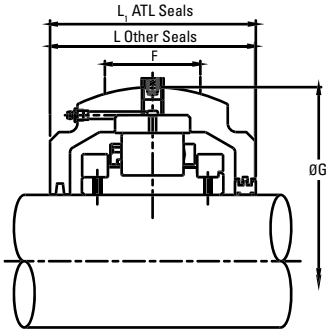

Shaft (d)		Reference		Bearings Ratings							Housing Reference						
		Add **BR** for Retained Add **BX** for Expansion e.g. HSE515BR		Dynamic C_r	Static C_{or}	Axial C_a	Max	D	B, B_1	C	ATL Seals Add **HRTL** for Retained Add **HXTL** for Expansion e.g. HS58HRTL	Other Seal Types Add **HR** for Retained Add **HX** for Expansion e.g.HSE515HR		G	F	L	L_1
mm	in.			**kN** lb.	**kN** lb.	**kN** lb.	RPM	**mm** in.	**mm** in.	**mm** in.				**mm** in.	**mm** in.	**mm** in.	**mm** in.
100 **105**	3 11⁄16 3 3⁄4 3 15⁄16 4	HSM100 HSM105	HSE311 HSE312 HSE315 HSE400	**653** 146800	**783** 176025	**31.20** 7014	1820	**254.00** 10.000	**84.20** 3.315	**136.00** 5.354	HS54	HSM100 HSM105	HSE311 HSE312 HSE315 HSE400	**308.00** 12.126	**95** 3.7	**200** 7.9	**206** 8.1
110 **115** **120**	4 3⁄16 4 1⁄4 4 7⁄16 4 1⁄2	HSM110 HSM115 HSM120	HSE403 HSE404 HSE407 HSE408	**656** 147475	**801** 180072	**39.10** 8790	1640	**266.70** 10.500	**87.30** 3.437	**147.00** 5.787	HS55	HSM110 HSM115 HSM120	HSE403 HSE404 HSE407 HSE408	**323.85** 12.750	**102** 4.0	**210** 8.3	**222** 8.7
125 **130**	4 11⁄16 4 3⁄4 4 15⁄16 5	HSM125 HSM130	HSE411 HSE412 HSE415 HSE500	**753** 169281	**974** 218964	**49.00** 11016	1500	**279.40** 11.000	**73.10** 2.878 **84.20** 3.315	**140.00** 5.512	HS56	HSM125 HSM130	HSE415 HSE500	**323.85** 12.750	**102** 4.0	**214** 8.4	**222** 8.7
135 **140**	5 3⁄16 5 1⁄4 5 7⁄16 5 1⁄2	HSM135 HSM140	HSE503 HSE504 HSE507 HSE508	**928** 208623	**1265** 284383	**58.80** 13219	1340	**304.80** 12.000	**79.40** 3.126 **90.50** 3.563	**147.00** 5.787	HS57	HSM135 HSM140	HSE503 HSE504 HSE507 HSE508	**355.60** 14.000	**108** 4.3	**216** 8.5	**230** 9.1
150 **155**	5 11⁄16 5 3⁄4 5 15⁄16 6	HSM150 HSM155	HSE511 HSE512 HSE515 HSE600	**1037** 233127	**1325** 297872	**69.40** 15602	1220	**330.20** 13.000	**81.00** 3.189 **96.90** 3.815	**160.00** 6.299	HS58	HSM150 HSM155	HSE511 HSE512 HSE515 HSE600	**393.70** 15.500	**114** 4.5	**232** 9.1	**254** 10.0
160 **170**	6 7⁄16 6 1⁄2 6 11⁄16	HSM160 HSM170	HSE607 HSE608 HSE611	**1196** 268871	**1576** 354299	**79.20** 17805	1110	**355.60** 14.000	**103.20** 4.063	**171.00** 6.732	HS59	HSM160 HSM170	HSE607 HSE608 HSE611	**422.30** 16.626	**120** 4.7	**244** 9.6	**268** 10.6
175 **180**	6 3⁄4 6 15⁄16 7	HSM175 HSM180	HSE612 HSE615 HSE700	**1330** 298996	**1867** 419718	**89.00** 20008	1030	**374.65** 14.750	**92.10** 3.626 **108.80** 4.283	**178.00** 7.008	HS60	HSM175 HSM180	HSE612 HSE615 HSE700	**431.80** 17.000	**132** 5.2	**254** 10.0	**284** 11.2
190 **200**	7 1⁄4 7 1⁄2 7 15⁄16 8	HSM190 HSM200	HSE704 HSE708 HSE715 HSE800	**1597** 359020	**2285** 513688	**99.60** 22391	880	**419.10** 16.500	**97.70** 3.846 **118.30** 4.657	**191.00** 7.520	HS61	HSM190 HSM200	HSE704 HSE708 HSE715 HSE800	**489.00** 19.252	**146** 5.7	**270** 10.6	**300** 11.8
220 **230**	8 1⁄2 8 7⁄8 9	HSM220 HSM230	HSE808 HSE814 HSE900	**1665** 374307	**2455** 551906	**109.40** 24594	760	**469.90** 18.500	**109.60** 4.315 **131.80** 5.189	**212.00** 8.346	HS62	HSM220 HSM230	HSE808 HSE814 HSE900	**546.10** 21.500	**165** 6.5	**298** 11.7	**334** 13.1
240 **260**	9 1⁄2 9 3⁄4 10	HSM240 HSM260	HSE908 HSE912 HSE1000	**1896** 426238	**2789** 626992	**130.80** 29405	700	**482.60** 19.000	**105.60** 4.157 **124.60** 4.906	**211.00** 8.307	HS63 HS63E0548	HSM240 HSM260	HSE908 HSE912 HSE1000	**558.80** 22.000	**165** 6.5	**298** 11.7	**334** 13.1

For triple labyrinth seal designations, please refer to page 32-34.

HEAVY SERIES SUPPORT
S54 - S63

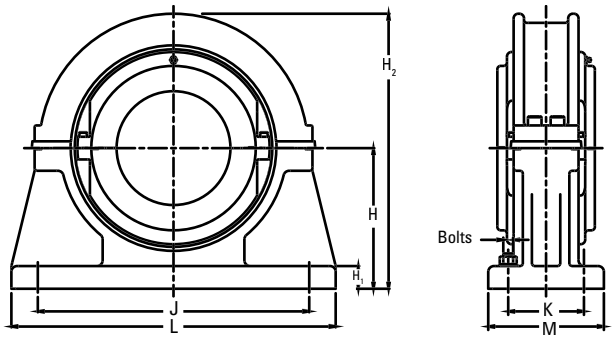

Shaft (d)		Support Reference	H	H_1	H_2	J x K	L x M	Bolts
mm	in.		**mm** in.	**mm** in.	**mm** in.	**mm** in.	**mm** in.	
100 **105**	3 11/16 3 3/4 3 15/16 4	S54	**191** 7.520	**38** 1.5	**405** 15.9	**438 x 82** 17.2 x 3.2	**514 x 152** 20.2 x 6	4 x M24
110 **115** **120**	4 3/16 4 1/4 4 7/16 4 1/2	S55	**197** 7.756	**38** 1.5	**425** 16.7	**458 x 88** 18 x 3.5	**534 x 166** 21 x 6.5	4 x M24
125 **130**	4 15/16 5	S56	**203** 7.992	**48** 1.9	**435** 17.1	**470 x 96** 18.5 x 3.8	**546 x 166** 21.5 x 6.5	4 x M24
135 **140**	5 3/16 5 1/4 5 7/16 5 1/2	S57	**229** 9.016	**54** 2.1	**485** 19.1	**514 x 102** 20.2 x 4	**622 x 178** 24.5 x 7	4 x M30
150 **155**	5 11/16 5 3/4 5 15/16 6	S58	**254** 10.000	**57** 2.2	**535** 21.1	**558 x 120** 22 x 4.7	**666 x 204** 26.2 x 8	4 x M30
160 **170**	6 7/16 6 1/2 6 11/16	S59	**267** 10.512	**60** 2.4	**570** 22.4	**628 x 140** 24.7 x 5.5	**736 x 228** 29 x 9	4 x M30
175 **180**	6 1/4 6 15/16 7	S60	**279** 10.984	**64** 2.5	**580** 22.8	**636 x 152** 25 x 6	**762 x 254** 30 x 10	4 x M30
190 **200**	7 1/4 7 1/2 7 15/16 8	S61	**311** 12.244	**67** 2.6	**655** 25.8	**636 x 172** 25 x 6.8	**838 x 266** 33 x 10.5	4 x M36
220 **230**	8 1/2 8 1/8 9	S62	**349** 13.740	**76** 3.0	**730** 28.7	**736 x 178** 29 x 7	**952 x 280** 37.5 x 11	4 x M42
240 **260**	9 1/2 9 1/4 10	S63	**394** 15.512	**76** 3.0	**790** 31.1	**670 x 304** 26.4 x 12	**914 x 406** 36 x 16	4 x M42

HEAVY SERIES BEARING AND HOUSING

280 MM TO 600 MM (11 IN. TO 24 IN.)

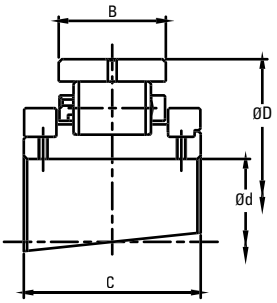

Expansion BX

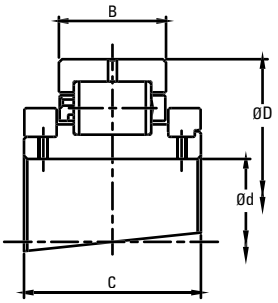

Retained BR

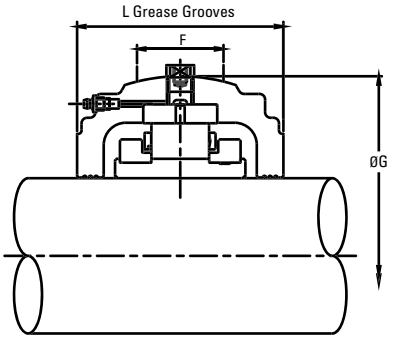

Shaft (d)		Reference		Bearings Ratings							Housing Reference						
		Add **BR** for Retained Add **BX** for Expansion e.g. HSE1700BR		Dynamic C_r	Static C_{or}	Axial C_a	Max	D	B, B_1	C	ATL Seals Add **HRTL** for retained Add **HXTL** for expansion e.g. HS89HRTL	Other Seal Types Add **HR** for Retained Add **HX** for Expansion e.g. HSE1700HR		G	F	L	L_1
mm	in.			**kN** lb.	**kN** lb.	**kN** lb.	RPM	**mm** in.	**mm** in.	**mm** in.				**mm** in.	**mm** in.	**mm** in.	**mm** in.
280	11	HSM280	HSE1100	**2202** 495029	**3507** 788405	**153.00** 34396	620	**495.30** 19.500	**139.70** 5.500	**244.00** 9.606	HS83	HSM280	HSE1100	**571.50** 22.500	**165** 6.5	**356** 14.0	**356** 14.0
300	12	HSM300	HSE1200	**2337** 525379	**3650** 820553	**174.40** 39207	560	**558.80** 22.000	**139.70** 5.500	**244.00** 9.606	HS65	HSM300	HSE1200	**641.40** 25.252	**165** 6.5	**346** 13.6	**370** 14.6
320	13	HSM320	HSE1300	**2718** 611031	**4093** 920143	**198.80** 44692	500	**622.30** 24.500	**160.40** 6.315	**272.00** 10.709	HS66	HSM320	HSE1300	**717.60** 28.252	**170** 6.7	**368** 14.5	–
340 **360**	14	HSM340 HSM360	HSE1400	**2935** 659814	**4973** 1117975	**213.60** 48019	460	**615.95** 24.250	**158.00** 6.220	**279.00** 10.984	HS86	HSM340 HSM360	HSE1400	**704.90** 27.752	**196** 7.7	**432** 17.0	–
380 **400**	15 16	HSM380 HSM400	HSE1500 HSE1600	**3195** 718265	**5238** 1177550	**250.80** 56382	420	**685.80** 27.000	**166.70** 6.563	**292.00** 11.496	HS68 HS68E0548	HSM380 HSM400	HSE1500 HSE1600	**774.70** 30.500	**202** 8.0	**400** 15.7	–
420 **440**	17	HSM420 HSM440	HSE1700	**3582** 805266	**6377** 1433607	**275.80** 62002	360	**700.00** 27.559	**160.00** 6.299	**284.00** 11.181	HS89	HSM420 HSM440	HSE1700	**788.00** 31.024	**200** 7.9	**440** 17.3	–
460	18	HSM460	HSE1800	**3807** 855848	**6611** 1486212	**302.40** 67982	340	**740.00** 29.134	**170.00** 6.693	**294.00** 11.575	HS90	HSM460	HSE1800	**840.00** 33.071	**200** 7.9	**450** 17.7	–
500 **530**	20 21	HSM500 HSM530	HSE2000 HSE2100	**4660** 1047610	**8183** 1839612	**347.00** 78009	310	**850.90** 33.500	**187.40** 7.378	**300.00** 11.811	HS94 HS94E0548	HSM500 HSM530	HSE2000 HSE2100	**958.90** 37.752	**204** 8.0	**495** 19.5	–
560	22	HSM560	HSE2200	**4795** 1077959	**9412** 2115902	**382.60** 86012	280	**863.60** 34.000	**196.90** 7.752	**310.00** 12.205	HS94	HSM560	HSE2200	**958.90** 37.752	**204** 8.0	**490** 19.3	–
580 **600**	23 24	HSM580 HSM600	HSE2300 HSE2400	**4951** 1113029	**9451** 2124669	**400** 89924	270	**890.00** 35.039	**184.00** 7.244	**310.00** 12.205	HS95	HSM580 HSM600	HSE2300 HSE2400	**990.00** 38.976	**204** 8.0	**490** 19.3	–

HEAVY SERIES SUPPORT
S83 - S95

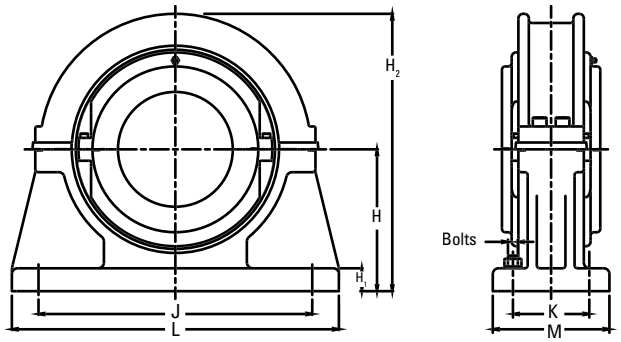

Shaft (d)		Support Reference	H	H_1	H_2	J x K	L x M	Bolts
mm	in.		**mm** in.	**mm** in.	**mm** in.	**mm** in.	**mm** in.	
280	11	S83	**368** 14.488	**70** 2.8	**785** 30.9	**742 & 502 x 178** 29.2 & 19.8 x 7	**940 x 280** 37 x 11	8 x M36
300	12	S65	**457** 17.992	**76** 3.0	**915** 36.0	**876 & 674 x 330** 34.5 & 26.5 x 13	**1092 x 420** 43 x 16.5	8 x M36
320	13	S66	**518** 20.394	**80** 3.1	**1035** 40.7	**978 & 762 x 266** 38.5 & 30 x 10.5	**1194 x 356** 47 x 14	8 x M36
340 **360**	14	S86	**470** 18.504	**82** 3.2	**1000** 39.4	**928 & 660 x 190** 36.5 & 26 x 7.5	**1220 x 318** 48 x 12.5	8 x M42
380 **400**	15 16	S68	**559** 22.008	**92** 3.6	**1120** 44.1	**1036 & 806 x 292** 40.8 & 31.7 x 11.5	**1270 x 394** 50 x 15.5	8 x M42
420 **440**	17	S89	**508** 20.000	**90** 3.5	**1075** 42.3	**990 & 690 x 210** 39 & 27.2 x 8.3	**1270 x 360** 50 x 14.2	8 x M48
460	18	S90	**550** 21.654	**95** 3.7	**1165** 45.9	**1080 & 780 x 220** 42.5 & 30.7 x 8.7	**1370 x 380** 53.9 x 15	8 x M48
500 **530**	20 21	S94	**622** 24.488	**102** 4.0	**1340** 52.8	**1270 & 940 x 242** 50 & 37 x 9.5	**1600 x 406** 63 x 16	8 x M56
560	22	S94	**622** 24.488	**102** 4.0	**1340** 52.8	**1270 & 940 x 242** 50 & 37 x 9.5	**1600 x 406** 63 x 16	8 x M56
580 **600**	23 24	S95	**622** 24.488	**102** 4.0	**1340** 52.8	**1270 & 940 x 242** 50 & 37 x 9.5	**1600 x 406** 63 x 16	8 x M56

HEAVY SERIES
FLANGE UNITS 125 MM TO 260 MM (4 15⁄16 IN. TO 10 IN.)

When faced with flat horizontal or vertical faces, flange units offer a simple mounting solution. As with pillow block supports, flange units are produced with spherical location to accommodate standard bearing housings and provide easy initial alignment of shaft and equipment.

To facilitate positive location of the flange to the surface, the rear face is recessed (dimensions N and V). This allows for a spigot (tolerance f8) to be located into the flange.

Bearing inspection is simply a matter of removing the top half of the flange and housing. Bearing replacement also may be achieved in the same manner if required.

When integrating flange units into new applications, it should be noted that a maximum radial load equivalent to 0.26 C_{or} is permissible. A maximum axial load of 0.25 C_a also must be taken into account for applications with thrust loading. Units for vertically oriented shafts may also need special consideration given to sealing arrangements.

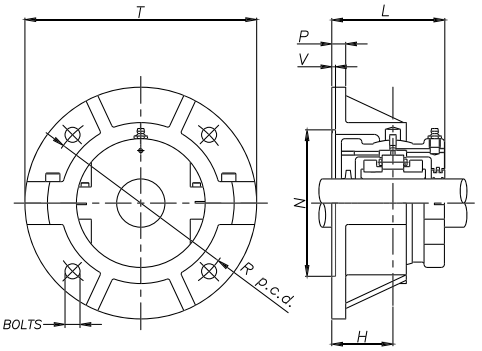

Shaft (d)		Flange Reference	T	R	P	H	N	V	L
mm	in.		**mm** in.	**mm** in.	**mm** in.	**mm** in.	**mm** in.	**mm** in.	**mm** in.
125 **130**	4 15⁄16 5	F56	**530** 20.9	**460** 18.1	**34** 1.3	**122** 4.8	**390.45** 15.372	**7** 0.3	**233** 9.2
150 **155**	5 11⁄16 5 3⁄4 5 15⁄16 6	F58	**648** 25.5	**574** 22.6	**44** 1.7	**137** 5.4	**495.35** 19.502	**7** 0.3	**264** 10.4
175 **180**	6 3⁄4 6 15⁄16 7	F60	**724** 28.5	**638** 25.1	**44** 1.7	**156** 6.1	**546.15** 21.502	**8** 0.3	**298** 11.7
240 **250** **260**	9 1⁄2 9 3⁄4 10	F63	**890** 35.0	**796** 31.3	**48** 1.9	**181** 7.1	**692.20** 27.252	**8** 0.3	**348** 13.7

For bearings and housings see page 72.

SAF/SN/SD BEARINGS

The new compact split plummer block bearing from Timken is the first split cylindrical roller bearing assembly to be interchangeable with standard SAF, SN and SD series plummer blocks, bringing the benefits of a split design to a much wider customer base.

The following topics are covered within this section:

SAFO TWO-BOLT / SAFO FOUR-BOLT BEARING AND HOUSING

1 7⁄16 IN. TO 3 7⁄16 IN.

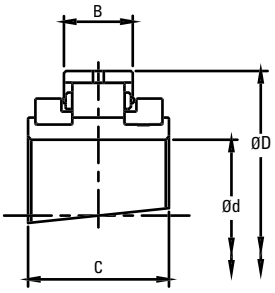

Expansion BX

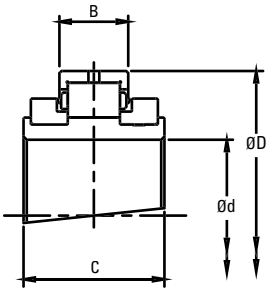

Retained BR

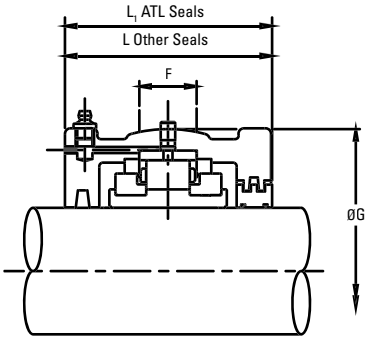

Shaft (d)	Reference			Bearings Ratings						Housing Reference					
	Add **BR** for Retained Add **BX** for Expansion	Additional Bearing(s)		Dynamic C_r	Static C_{or}	Max	D	B	C	Retained	Expansion	G	F	L	L_1
in.		**mm**	in.	**kN** lb.	**kN** lb.	RPM	**mm** in.	**mm** in.	**mm** in.			**mm** in.	**mm** in.	**mm** in.	**mm** in.
1 7⁄16	LSE107	LSM30 LSM35 LSM40	LSE103 LSE104	**63.5** 14296	**65.4** 14724	5400	**84.14** 3.313	**23.8** 0.937	**55** 2.165	LS1HRTL	LS1HXTL	**100** 3.937	**25** 0.984	**84** 3.307	**91** 3.582
1 11⁄16	LSE111	LSM45	LSE112	**83.1** 18694	**87.3** 19643	4630	**98.42** 3.875	**25.4** 1.000	**60** 2.362	LS2HRTL	LS2HXTL	**117.48** 4.625	**25** 0.984	**96** 3.780	**98** 3.858
1 15⁄16	LSE115	LSM45 LSM50	LSE111 LSE112 LSE200	**83.1** 18695	**87.3** 19644	4630	**98.42** 3.875	**25.4** 1.000	**60** 2.362	LS2HRTL	LS2HXTL	**117.48** 4.625	**25** 0.984	**96** 3.780	**98** 3.858
2 3⁄16	LSE203	LSM55 LSM60 LSM65	LSE204 LSE207 LSE208	**102.7** 23118	**115** 25848	3940	**114.3** 4.500	**27** 1.063	**60** 2.362	LS3HRTL	LS3HXTL	**134.94** 5.313	**32** 1.260	**102** 4.016	**104** 4.094
2 7⁄16	LSE207	LSM55 LSM60 LSM65	LSE203 LSE204 LSE208	**102.7** 23118	**114.9** 25848	3940	**114.3** 4.500	**27** 1.063	**60** 2.362	LS3HRTL	LS3HXTL	**134.94** 5.313	**32** 1.260	**102** 4.016	**104** 4.094
2 7⁄16	LSE207	LSM55 LSM60 LSM65	LSE203 LSE204 LSE208	**102.7** 23118	**114.9** 25848	3940	**114.3** 4.500	**27** 1.063	**60** 2.362	LS3HRTL	LS3HXTL	**134.94** 5.313	**32** 1.260	**102** 4.016	**104** 4.094
2 11⁄16	LSE211	LSM70 LSM75	LSE212 LSE215 LSE300	**138** 31041	**160.8** 36179	3310	**133.35** 5.250	**31.8** 1.252	**65** 2.559	LS4HRTL	LS4HXTL	**157.16** 6.187	**38** 1.496	**112** 4.409	**114** 4.488
2 11⁄16	LSE211	LSM70 LSM75	LSE212 LSE215 LSE300	**138** 31041	**160.8** 36179	3310	**133.35** 5.250	**31.8** 1.252	**65** 2.559	LS4HRTL	LS4HXTL	**157.16** 6.187	**38** 1.496	**112** 4.409	**114** 4.488
2 15⁄16	LSE215	LSM70 LSM75	LSE211 LSE212 LSE300	**138** 31041	**160.8** 36179	3310	**133.35** 5.250	**31.8** 1.252	**65** 2.559	LS4HRTL	LS4HXTL	**157.16** 6.187	**38** 1.496	**112** 4.409	**114** 4.488
2 15⁄16	MSE215	MSM70	MSE211 MSE212 MSE300	**258** 58051	**300.3** 67566	3080	**149.22** 5.875	**46.1** 1.815	**82.6** 3.252	MS5HRTL	MS5HXTL	**177.8** 7.000	**50** 1.969	**138** 5.433	**140** 5.512
3 3⁄16	LSE303	LSM80 LSM85	LSE304	**187.3** 42145	**231.3** 52033	2790	**152.4** 6.000	**38.9** 1.532	**70.7** 2.784	LS5HRTL	LS5HXTL	**177.8** 7.000	**50** 1.969	**134** 5.276	**136** 5.354
3 7⁄16	LSE307	LSM80 LSM85	LSE303 LSE304 LSE308	**187.3** 42145	**231.3** 52033	2790	**152.4** 6.000	**38.9** 1.532	**70.7** 2.784	LS5HRTL	LS5HXTL	**177.8** 7.000	**50** 1.969	**134** 5.276	**136** 5.354

SAFQ TWO-BOLT / SAFQ FOUR-BOLT SUPPORT

SAFQ1-2B - SAFQ05-2B

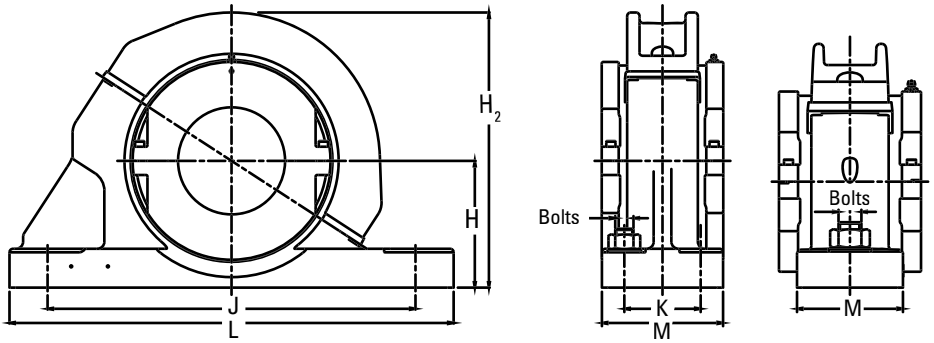

Shaft (d)	Support Reference	SAF Reference	Additional Shafts		H	J		K	Bolts	L	M	H_2
						Min.	Max.					
in.			mm	in.	in.	in.	in.	in.		in.	in.	in.
1 7/16	SAFQ01-2B	SAF 509 2-BOLT	**30** **35** **40**	1 3/16 1 1/4	2 1/4	6 1/4	7	–	2 x 1/2	8 1/4	2 3/16	5.2
1 11/16	SAFQ02-2B	SAF 510 2-BOLT	**45**	1 3/4	2 1/2	6 1/2	7	–	2 x 1/2	8 1/4	2 3/8	5.9
1 15/16	SAFQ02A-2B	SAF 511 2-BOLT	**45** **50**	1 11/16 1 3/4 2	2 3/4	7 3/8	8 1/4	–	2 x 5/8	9 5/8	2 3/4	6.15
2 3/16	SAFQ03-2B	SAF 513 2-BOLT	**55** **60** **65**	2 1/4 2 7/16 2 1/2	3	8 1/4	9 1/2	–	2 x 5/8	11	3 1/4	6.95
2 7/16	SAFQ03A-2B	SAF 515 2-BOLT	**55** **60** **65**	2 3/16 2 1/4 2 1/2	3 1/4	8 5/8	9 5/8	–	2 x 5/8	11 1/8	3 1/8	7.2
2 7/16	SAFQ03A-4B	SAF 515 4-BOLT	**55** **60** **65**	2 3/16 2 1/4 2 1/2	3 1/4	8 5/8	9 5/8	1 7/8	4 x 1/2	11 1/8	3 1/8	7.2
2 11/16	SAFQ04A-2B	SAF 516 2-BOLT	**70** **75**	2 3/4 2 15/16 3	3 1/2	9 3/4	11	–	2 x 3/4	12 19/32	3 1/2	7.95
2 11/16	SAFQ04A-4B	SAF 516 4-BOLT	**70** **75**	2 3/4 2 15/16 3	3 1/2	9 5/8	11	2 1/8	4 x 5/8	12 19/32	3 1/2	7.95
2 15/16	SAFQ04-2B	SAF 517 2-BOLT	**70** **75**	2 11/16 2 3/4 3	3 3/4	9 7/8	11	–	2 x 3/4	12 19/32	3 1/2	8.2
2 15/16	SAFQ05A-4B	SAF 517 4-BOLT	**80** **85**	2 11/16 2 3/4	3 3/4	9 7/8	11	2 1/8	4 x 5/8	12 19/32	3 1/2	8.5
3 3/16	SAFQ05B-2B	SAF 518 2-BOLT	**80** **85**	3 1/4	4	10 1/4	11 3/4	–	2 x 3/4	13 5/8	3 7/8	8.95
3 7/16	SAFQ05-2B	SAF 520 2-BOLT	**80** **85** **90**	3 3/16 3 1/4 3 1/2	4 1/2	11 5/8	13 1/8	–	2 x 7/8	15 23/64	4 11/32	9.6

SAFO TWO-BOLT / SAFO FOUR-BOLT BEARING AND HOUSING

3 7/16 IN. TO 7 15/16 IN.

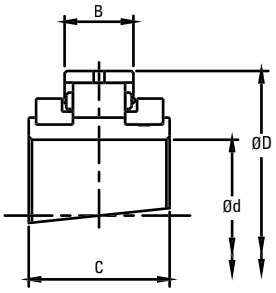

Expansion BX

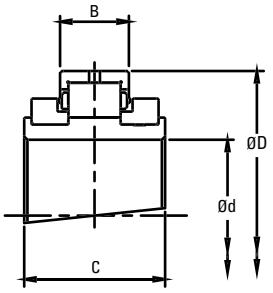

Retained BR

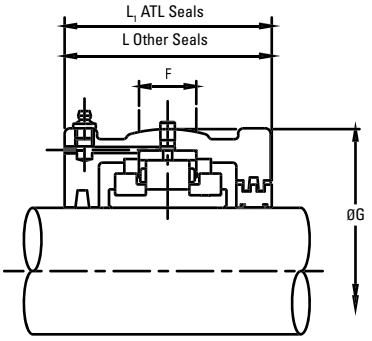

Shaft (d)	Reference			Bearings Ratings						Housing Reference					
	Add **BR** for Retained Add **BX** for Expansion	Additional Bearing(s)		Dynamic C_r	Static C_{or}	Max	D	B	C	Retained	Expansion	G	F	L	L_1
in.		**mm**	in.	**kN** lb.	**kN** lb.	RPM	**mm** in.	**mm** in.	**mm** in.			**mm** in.	**mm** in.	**mm** in.	**mm** in.
3 7/16	MSE307	**MSM80** **MSM85**	MSE303 MSE304 MSE308	**297** 66830	**352.5** 79315	2520	**169.86** 6.687	**48.4** 1.906	**89.7** 3.532	MS6HRTL	MS6HXTL	**203.2** 8.000	**50** 1.969	**152** 5.984	**154** 6.063
3 15/16	MSE315	**MSM95** **MSM100**	MSE311 MSE312 MSE400	**387.7** 87235	**490.6** 110375	2130	**193.68** 7.625	**51.6** 2.032	**92.1** 3.626	MS7HRTL	MS7HXTL	**231.78** 9.125	**64** 2.517	**144** 5.669	**146** 5.748
4 3/16	LSE403	**LSM110** **LSM115**	LSE404 LSE406 LSE407 LSE408	**316** 71105	**426.9** 96059	1970	**203.2** 8.000	**46.9** 1.847	**84.9** 3.343	LS7HRTL	LS7HXTL	**231.78** 9.125	**64** 2.517	**140** 5.512	**142** 5.591
4 7/16	MSE407	**MSM110** **MSM115**	MSE403 MSE404 MSE406 MSE408	**453.9** 102130	**591.7** 133135	1820	**228.6** 9.000	**57.2** 2.252	**100** 3.937	MS8HRTL	MS8HXTL	**266.7** 10.500	**76** 2.992	**160** 6.299	**162** 6.378
4 15/16	MSE415	**MSM120** **MSM125**	MSE411 MSE412	**524.8** 118084	**700.3** 157566	1600	**254** 10.000	**63.5** 2.189	**114.3** 3.874	MS10HR-TLE0509	MS10HX-TLE0509	**287.98** 11.625	**82** 3.228	**182** 6.772	**184** 6.850
5 3/16	LSE503	**LSM135** **LSM140**	LSE504 LSE507 LSE508	**422.5** 95055	**585.2** 131675	1570	**241.3** 9.500	**55.6** 2.189	**98.4** 3.874	LS9HRTL	LS9HXTL	**279.4** 11.000	**76** 2.992	**166** 6.535	**168** 6.614
5 7/16	MSE507	**MSM135** **MSM140**	MSE503 MSE504 MSE508	**600.4** 135088	**816.6** 183729	1450	**273.05** 10.750	**66.7** 2.626	**117.5** 4.626	MS30HRTL	MS30HXTL	**323.85** 12.750	**90** 3.543	**186** 7.323	**188** 7.402
5 15/16	MSE515	**MSM150**	MSE511 MSE512 MSE514	**730.2** 164289	**1033.8** 232600	1320	**292.1** 11.500	**68.3** 2.689	**123.8** 4.874	MS31HRTL	MS31HXTL	**336.55** 13.250	**95** 3.740	**202** 7.953	**204** 8.031
6 7/16	MSE607	**MSM160**	MSE608	**824.1** 185430	**1143** 257168	1200	**317.5** 12.500	**83.3** 3.280	**140** 5.512	MS32HRTL	MS32HXTL	**368.3** 14.500	**95** 3.740	**206** 8.110	**232** 9.134
6 15/16	LSE615	**LSM170** **LSM175** **LSM180**	LSE611 LSE612 LSE700	**524.4** 117993	**827.7** 186233	1220	**285.75** 11.250	**55.5** 2.185	**109** 4.291	LS12HRTL	LS12HXTL	**323.85** 12.750	**70** 2.756	**172** 6.772	**200** 7.874
7 3/16	LSE703	**LSM190** **LSM200**	LSE704 LSE708 LSE715 LSE800	**607** 136576	**989.7** 222676	1070	**311.15** 12.250	**60.3** 2.374	**109** 4.291	LS13HRTL	LS13HXTL	**258.78** 10.188	**86** 3.386	**172** 6.772	**200** 7.874
7 15/16	MSE715	**MSM190** **MSM200**	MSE703 MSE704 MSE708 MSE800	**1012.9** 227893	**1516.3** 341160	960	**368.3** 14.500	**90.5** 3.563	**156** 6.142	MS34HRTL	MS34HXTL	**425.5** 16.752	**105** 4.134	**235** 9.252	**258** 10.157

contiued on next page

SAFQ TWO-BOLT / SAFQ FOUR-BOLT SUPPORT
SAFQ06A - SAFQ34A

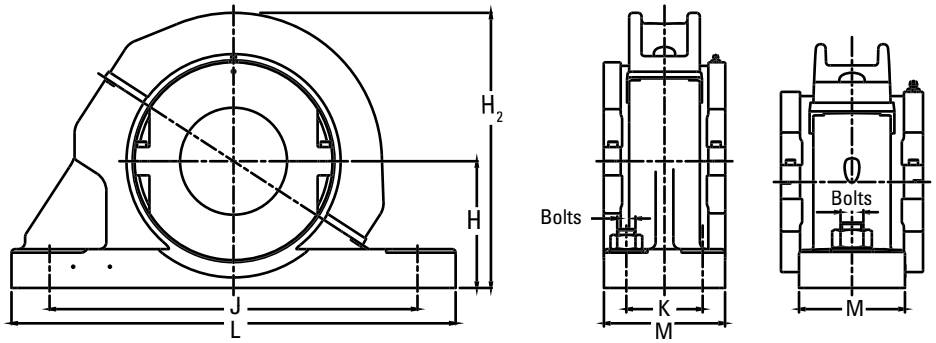

Shaft (d)	Support Reference	SAF Reference	Additional Shafts		H	J		K	Bolts	L	M	H_2
						Min.	Max.					
in.			mm	in.	in.	in.	in.	in.		in.	in.	in.
3 7/16	SAFQ06A	SAF 520 4-BOLT	**80** **85**	3 3/16 3 1/4 3 1/2	4 1/2	11 5/8	13 1/8	2 3/8	4 x 3/4	15 23/64	4 11/32	9.95
3 15/16	SAFQ07A	SAF 522	**95** **100**	3 11/16 3 3/4 4	4 15/16	12 9/16	14 1/2	2 3/4	4 x 3/4	16 1/2	4 3/4	11
4 3/16	SAFQ07B	SAF 524	**110** **115**	4 1/4 4 3/8 4 7/16 4 1/2	5 1/4	13 1/4	14 1/2	2 3/4	4 x 3/4	16 1/2	4 3/4	11.3
4 7/16	SAFQ08A	SAF526	**110** **115**	4 3/16 4 1/4 4 3/8 4 1/2	6	14 1/2	16	3 1/4	4 x 7/8	18 3/8	5 1/8	13.1
4 15/16	SAFQ10A	SAF528	**120** **125**	4 11/16 4 3/4 5	6	15 5/8	17 3/8	3 3/8	4 x 1	19 45/64	5 7/8	13.3
5 3/16	SAFQ09A	SAF530	**135** **140**	5 7/16 5 1/4 5 1/2	6 5/16	16 3/4	18 1/2	3 3/4	4 x 1	21 1/4	6 1/4	14.2
5 7/16	SAFQ30	SAF532	**135** **140**	5 3/16 5 1/4 5 1/2	6 11/16	17 3/8	19 1/4	3 3/4	4 x 1	21 21/32	6 1/4	15.15
5 15/16	SAFQ31	SAF534	**150**	5 11/16 5 3/4 5 7/8 6	7 1/16	19 3/8	21 5/8	4 1/4	4 x 1	24 3/4	6 3/4	15.75
6 7/16	SAFQ32	SAF536	**160**	6 1/2	7 1/2	20 7/8	23 5/8	4 5/8	4 x 1	26 3/4	7 1/8	17.6
6 15/16	SAFQ12	SAF538	**170** **175** **180**	6 11/16 6 3/4 7	7 7/8	21 5/8	24 3/8	4 1/2	4 x 1 1/4	28	7 1/2	16.75
7 3/16	SAFQ13	SAF540	**190** **200**	7 1/4 7 1/2 7 15/16 8	8 1/4	22 1/2	25	5	4 x 1 1/4	29 3/8	8	17.7
7 15/16	SAFQ34A	SAF544	**190** **200**	7 3/16 7 1/4 7 1/2 8	9 1/2	24 3/4	27 7/8	5 1/4	4 x 1 1/2	32 3/4	8 3/4	21.35

LIGHT SNQ/SDQ RANGE BEARING AND HOUSING

35 MM TO 160 MM (1 3⁄16 IN. TO 6 IN.)

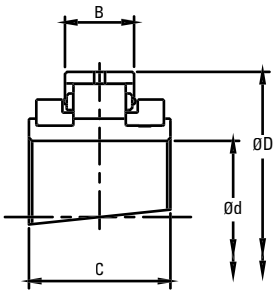

Expansion BX

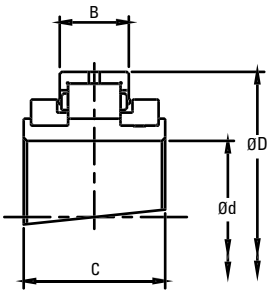

Retained BR

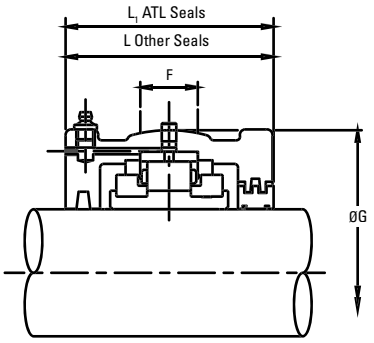

Shaft (d)		Reference		Bearings Ratings							Housing Reference						
		Add **BR** for Retained Add **BX** for Expansion e.g. LSE103BR		Dynamic C_r	Static C_{or}	Axial C_a	Max	D	B, B_1	C	ATL Seals Add **HRTL** for retained Add **HXTL** for Expansion e.g. LS1HRTL	Other Seal Types Add **HR** for Retained Add **HX** for Expansion e.g. LSE103HR		G	F	L	L_1
mm	in.			**kN** lb.	**kN** lb.	**kN** lb.	RPM	**mm** in.	**mm** in.	**mm** in.				**mm** in.	**mm** in.	**mm** in.	**mm** in.
35 **40**	1 3⁄16 1 ¼ 1 7⁄16 1 ½	LSM35 LSM40	LSE103 LSE104 LSE107 LSE108	**65** 14613	**68** 15287	**3.20** 719.38	5400	**84.14** 3.313	**23.80** 0.937	**55.00** 2.165	LS1	LSM35 LSM40	LSE103 LSE104 LSE107 LSE108	**100.00** 3.937	**25** 1.0	**84** 3.3	**91** 3.6
45 **50**	1 11⁄16 1 ¾ 1 15⁄16 2	LSM45 LSM50	LSE111 LSE112 LSE115 LSE200	**83** 18659	**87** 19558	**3.60** 809.30	4630	**98.42** 3.875	**25.40** 1.000	**60.00** 2.362	LS2	LSM50	LSE111 LSE112 LSE115 LSE200	**117.48** 4.625	**25** 1.0	**96** 3.8	**98** 3.9
55 **60** **65**	2 3⁄16 2 ¼ 2 7⁄16 2 ½	LSM55 LSM60 LSM65	LSE203 LSE204 LSE207 LSE208	**103** 23155	**115** 25853	**5.40** 1213.95	3940	**114.30** 4.500	**27.00** 1.063	**60.00** 2.362	LS3	LSM55 LSM60 LSM65	LSE203 LSE204 LSE207 LSE208	**134.94** 5.313	**32** 1.3	**102** 4.0	**104** 4.1
70 **75**	2 11⁄16 2 ¾ 2 15⁄16 3	LSM70 LSM75	LSE211 LSE212 LSE215 LSE300	**138** 31024	**161** 36194	**7.60** 1708.53	3310	**133.35** 5.250	**31.80** 1.252	**65.00** 2.559	LS4	LSM70 LSM75	LSE211 LSE212 LSE215 LSE300	**157.16** 6.187	**38** 1.5	**112** 4.4	**114** 4.5
80 **85** **90**	3 3⁄16 3 ¼ 3 7⁄16 3 ½	LSM80 LSM85 LSM90	LSE303 LSE304 LSE307 LSE308	**187** 42039	**231** 51931	**12.40** 2787.59	2790	**152.40** 6.000	**38.90** 1.531	**75.00** 2.953	LS5	LSM80 LSM85 LSM90	LSE303 LSE304 LSE307 LSE308	**177.80** 7.000	**50** 2.0	**134** 5.3	**136** 5.4
95 **100** **105**	3 11⁄16 3 ¾ 3 15⁄16 4	LSM95 LSM100 LSM105	LSE311 LSE312 LSE315 LSE400	**288** 64745	**366** 82280	**16.00** 3596.90	2340	**174.62** 6.875	**45.30** 1.783	**85.00** 3.346	LS6	LSM95 LSM100 LSM105	LSE311 LSE312 LSE315 LSE400	**203.20** 8.000	**50** 2.0	**132** 5.2	**134** 5.3
110 **115**	4 3⁄16 4 ¼ 4 7⁄16 4 ½	LSM110 LSM115	LSE403 LSE404 LSE407 LSE408	**316** 71040	**427** 95993	**18.60** 4181.39	1970	**203.20** 8.000	**46.90** 1.846	**90.00** 3.543	LS7	LSM110 LSM115	LSE403 LSE404 LSE407 LSE408	**231.78** 9.125	**64** 2.5	**140** 5.5	**142** 5.6
120 **125** **130**	4 11⁄16 4 ¾ 4 15⁄16 5	LSM120 LSM125 LSM130	LSE411 LSE412 LSE415 LSE500	**363** 81606	**496** 111505	**22.20** 4990.69	1740	**222.25** 8.750	**54.00** 2.126	**95.00** 3.740	LS8	LSM120 LSM125 LSM130	LSE411 LSE412 LSE415 LSE500	**266.70** 10.500	**76** 3.0	**154** 6.1	**156** 6.1
135 **140**	5 3⁄16 5 ¼ 5 7⁄16 5 ½	LSM135 LSM140	LSE503 LSE504 LSE507 LSE508	**422** 94869	**585** 131513	**25.80** 5799.99	1570	**241.30** 9.500	**55.60** 2.189	**98.40** 3.874	LS9	LSM135 LSM140	LSE503 LSE504 LSE507 LSE508	**279.40** 11.000	**76** 3.0	**166** 6.5	**168** 6.6
150 **155** **160**	5 11⁄16 5 ¾ 5 15⁄16 6	LSM150 LSM155 LSM160A	LSE511 LSE512 LSE515 LSE600	**459** 103187	**664** 149273	**29.40** 6609.30	1450	**254.00** 10.000	**55.60** 2.189	**98.40** 3.874	LS10	LSM150 LSM155 LSM160A	LSE511 LSE512 LSE515 LSE600	**295.28** 11.625	**82** 3.2	**172** 6.8	**174** 6.9

LIGHT SNQ/SDQ RANGE SUPPORT

SNQ01 - SNQ10

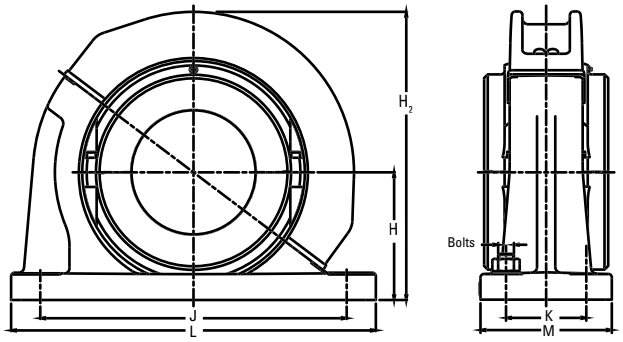

Shaft (d)		Spherical Roller Bearing Reference	SN/SD Reference	H	H_2	J x K	L x M	Bolts
mm	in.			**mm**	**mm**	**mm**	**mm**	
35 **40**	1 3/16 1 1/4 1 7/16 1 1/2	SNQ01	SN 508 SN 509	**60**	**135**	**170**	**205 x 60**	2 x M12
45 **50**	1 11/16 1 3/4 11 5/16 2	SNQ02	SN 511	**70**	**155**	**210**	**255 x 70**	2 x M16
55 **60** **65**	2 3/16 2 1/4 2 7/16 2 1/2	SNQ03	SN 513 SN 515	**80**	**180**	**234**	**275 x 70**	2 x M16
70 **75**	2 11/16 2 3/4 2 15/16 3	SNQ04	SN 516 SN 517	**95**	**208**	**260**	**315 x 90**	2 x M20
80 **85** **90**	3 3/16 3 1/4 3 7/16 3 1/2	SNQ05 SNQ05A SNQ05B	SN 518 SN 519 SN 520	**100** **112** **112**	**230** **242** **242**	**290** **290** **320**	**345 x 100** **345 x 100** **380 x 110**	2 x M20 2 x M20 2 x M24
95 **100** **105**	3 11/16 3 3/4 3 15/16 4	SNQ06	SN 522	**125**	**265**	**350**	**410 x 120**	2 x M24
110 **115**	4 3/16 4 1/4 4 7/16 4 1/2	SNQ07 SNQ07A	SN 524 SN 526	**140** **150**	**300** **310**	**350** **380**	**410 x 120** **445 x 130**	2 x M24 2 x M24
120 **125** **130**	4 11/16 4 3/4 4 15/16 5	SNQ08	SN 528	**150**	**354**	**420**	**500 x 150**	2 x M30
135 **140**	5 3/16 5 1/4 5 7/16 5 1/2	SNQ09 SNQ09A	SN 530 SN 532	**160** **170**	**369** **379**	**450** **470**	**530 x 160** **550 x 160**	2 x M30 2 x M30
150 **155** **160**	5 11/16 5 3/4 5 15/16 6	SDQ10	SD 3134	**170**	**379**	**430 x 100**	**510 x 180**	4 x M24

LIGHT SNQ/SDQ RANGE BEARING AND HOUSING

160 MM TO 305 MM (6 7/16 IN. TO 12 IN.)

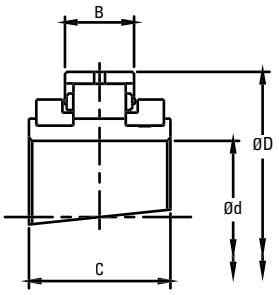

Expansion BX

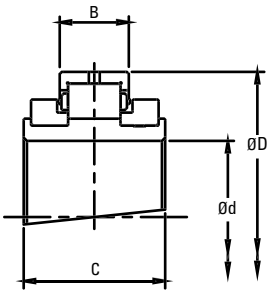

Retained BR

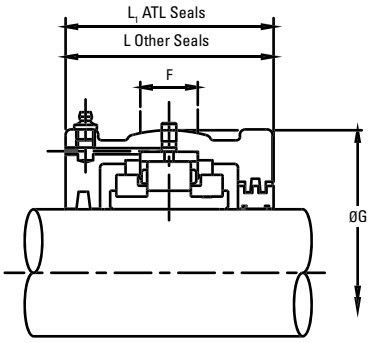

Shaft (d)		Reference		Bearings Ratings							Housing Reference						
		Add **BR** for Retained Add **BX** for Expansion e.g. LSE103BR		Dynamic C_r	Static C_{or}	Axial C_a	Max	D	B, B_1	C	ATL Seals Add **HRTL** for Retained Add **HXTL** for Expansion e.g. LS1HRTL	Other Seal Types Add **HR** for Retained Add **HX** for Expansion e.g. LSE103HR		G	F	L	L_1
mm	in.			**kN** lb.	**kN** lb.	**kN** lb.	RPM	**mm** in.	**mm** in.	**mm** in.				**mm** in.	**mm** in.	**mm** in.	**mm** in.
160 **170**	6 7/16 6 ½	LSM160 LSM170A	LSE607 LSE608	**583** 131064	**792** 178049	**33.00** 7419	1320	**273.05** 10.750	**60.30** 2.374	**109.00** 4.291	LS11	LSM160 LSM170A	LSE607 LSE608	**311.15** 12.250	**76** 3.0	**172** 6.8	**192** 7.6
170 **175** **180**	6 11/16 6 ¾ 6 15/16 7	LSM170 LSM175 LSM180	LSE611 LSE612 LSE615 LSE700	**524** 117800	**828** 186142	**36.40** 8183	1220	**285.75** 11.250	**55.50** 2.185	**109.00** 4.291	LS12	LSM170 LSM175 LSM180	LSE611 LSE612 LSE615 LSE700	**323.85** 12.750	**70** 2.8	**172** 6.8	**200** 7.9
190 **200**	7 3/16 7 ¼ 7 ½ 7 15/16 8	LSM190 LSM200	LSE703 LSE704 LSE708 LSE715 LSE800	**614** 138033	**990** 222561	**41.00** 9217	1070	**311.15** 12.250	**60.30** 2.374	**106.00** 4.173	LS13	LSM190 LSM200	LSE703 LSE704 LSE708 LSE715 LSE800	**358.78** 14.125	**86** 3.4	**172** 6.8	**200** 7.9
220 **230**	8 7/16 8 ½ 8 ⅞ 9	LSM220 LSM230	LSE807 LSE808 LSE814 LSE900	**708** 159165	**1168** 262577	**49.00** 11016	930	**342.90** 13.500	**63.50** 2.500	**115.00** 4.528	LS14	LSM220 LSM230	LSE807 LSE808 LSE814 LSE900	**387.35** 15.250	**82** 3.2	**178** 7.0	**216** 8.5
240 **250** **260**	9 ½ 9 ¾ 10	LSM240 LSM250 LSM260A	LSE908 LSE912 LSE1000	**744** 167258	**1289** 289779	**57.80** 12994	820	**374.65** 14.750	**66.70** 2.626	**122.00** 4.803	LS15	LSM240 LSM250 LSM260A	LSE908 LSE912 LSE1000	**419.10** 16.500	**90** 3.5	**188** 7.4	**222** 8.7
260 **270** **280**	10 7/16 10 ½ 10 ¾ 11	LSM260 LSM270 LSM280	LSE1007 LSE1008 LSE1012 LSE1100	**848** 190638	**1502** 337663	**66.80** 15017	730	**406.40** 16.000	**69.00** 2.717	**128.00** 5.039	LS16	LSM260 LSM270 LSM280	LSE1007 LSE1008 LSE1012 LSE1100	**454.00** 17.874	**95** 3.7	**204** 8.0	**232** 9.1
300 **305**	11 ½ 12	LSM300 LSM305	LSE1108 LSE1200	**929** 208848	**1665** 374307	**78.20** 17580	650	**438.15** 17.250	**74.60** 2.937	**143.00** 5.630	LS17	LSM300 LSM305	LSE1108 LSE1200	**489.00** 19.252	**98** 3.9	**216** 8.5	**248** 9.8

LIGHT SNQ/SDQ RANGE SUPPORT
SDQ11 - SDQ17

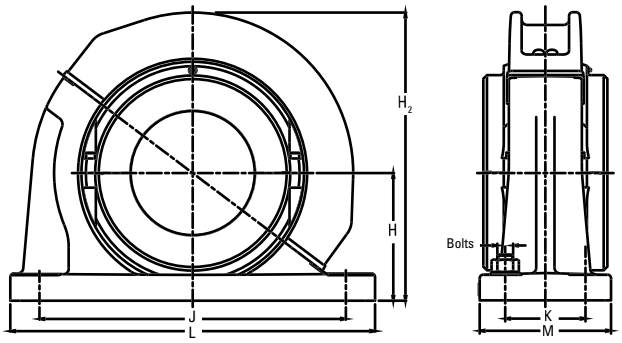

Shaft (d)		Spherical Roller Bearing Reference	SN/SD Reference	H	H_2	J x K	L x M	Bolts
mm	in.			**mm**	**mm**	**mm**	**mm**	
160 **170**	6 7/16 6 ½	SDQ11	SD 3136	**180**	**396**	**450 x 110**	**530 x 190**	4 x M24
170 **175** **180**	6 11/16 6 ¾ 6 15/16 7	SDQ12 SDQ12A	SD 3138 SD 3140	**190** **210**	**417** **437**	**480 x 120** **510 x 130**	**560 x 210** **610 x 230**	4 x M24 4 x M30
190 **200**	7 3/16 7 ¼ 7 ½ 7 15/16 8	SDQ13	SD 3144	**220**	**457**	**540 x 140**	**640 x 240**	4 x M30
220 **230**	8 7/16 8 ½ 8 7/8 9	SDQ14	SD 3148	**240**	**510**	**600 x 150**	**700 x 260**	4 x M30
240 **250** **260**	9 ½ 9 ¾ 10	SDQ15	SD 3152	**260**	**545**	**650 x 160**	**770 x 280**	4 x M36
260 **270** **280**	10 7/16 10 ½ 10 ¾ 11	SDQ16 SDQ16A	SD 3156 SD 3160	**280** **300**	**589** **609**	**670 x 160** **710 x 190**	**790 x 280** **830 x 310**	4 x M36 4 x M36
300 **305**	11 ½ 12	SDQ17	SD3164	**320**	**662**	**750 x 200**	**880 x 330**	4 x M36

LIGHT SN/SD RANGE BEARINGS AND HOUSINGS

35 MM TO 160 MM (1 3⁄16 IN. TO 6 IN.)

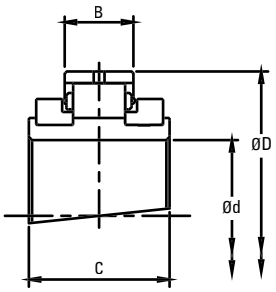

Expansion BX

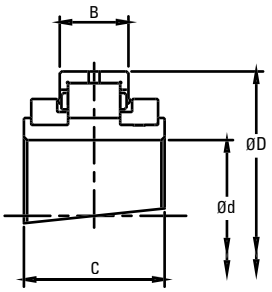

Retained BR

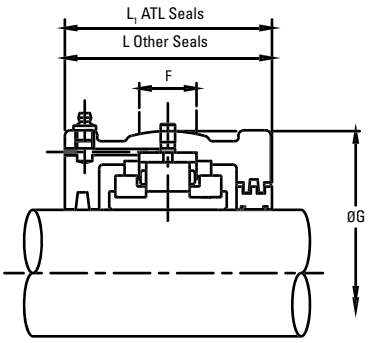

Shaft (d)		Reference		Bearings Ratings							Housing Reference							
		Add **BR** for Retained Add **BX** for Expansion e.g. LSE103BR		Dynamic C_r	Static C_{or}	Axial C_a	Max	D	B	C	ATL Seals Add **HRTL** for Retained Add **HXTL** for Expansion e.g. LS1HRTL	Other Seal Types Add **HR** for Retained Add **HX** for Expansion e.g. LSE103HR		G	F	L	L_1
mm	in.			**kN** lb.	**kN** lb.	**kN** lb.	RPM	**mm** in.	**mm** in.	**mm** in.				**mm** in.	**mm** in.	**mm** in.	**mm** in.
35 **40**	1 3⁄16 1 ¼ 1 7⁄16 1 ½	LSM35 LSM40	LSE103 LSE104 LSE107 LSE108	**65** 14613	**68** 15287	**3.20** 719.38	5400	**84.14** 3.313	**23.80** 0.937	**55.00** 2.165	LS1	LSM35 LSM40	LSE103 LSE104 LSE107 LSE108	**100.00** 3.937	**25** 1.0	**84** 3.3	**91** 3.6
45 **50**	1 11⁄16 1 ¾ 1 15⁄16 2	LSM45 LSM50	LSE111 LSE112 LSE115 LSE200	**83** 18659	**87** 19558	**3.60** 809.30	4630	**98.42** 3.875	**25.40** 1.000	**60.00** 2.362	LS2	LSM50	LSE111 LSE112 LSE115 LSE200	**117.48** 4.625	**25** 1.0	**96** 3.8	**98** 3.9
55 **60** **65**	2 3⁄16 2 ¼ 2 7⁄16 2 ½	LSM55 LSM60 LSM65	LSE203 LSE204 LSE207 LSE208	**103** 23155	**115** 25853	**5.40** 1213.95	3940	**114.30** 4.500	**27.00** 1.063	**60.00** 2.362	LS3	LSM55 LSM60 LSM65	LSE203 LSE204 LSE207 LSE208	**134.94** 5.313	**32** 1.3	**102** 4.0	**104** 4.1
70 **75**	2 11⁄16 2 ¾ 2 15⁄16 3	LSM70 LSM75	LSE211 LSE212 LSE215 LSE300	**138** 31024	**161** 36194	**7.60** 1708.53	3310	**133.35** 5.250	**31.80** 1.252	**65.00** 2.559	LS4	LSM70 LSM75	LSE211 LSE212 LSE215 LSE300	**157.16** 6.187	**38** 1.5	**112** 4.4	**114** 4.5
80 **85** **90**	3 3⁄16 3 ¼ 3 7⁄16 3 ½	LSM80 LSM85 LSM90	LSE303 LSE304 LSE307 LSE308	**187** 42039	**231** 51931	**12.40** 2787.59	2790	**152.40** 6.000	**38.90** 1.531	**75.00** 2.953	LS5	LSM80 LSM85 LSM90	LSE303 LSE304 LSE307 LSE308	**177.80** 7.000	**50** 2.0	**134** 5.3	**136** 5.4
95 **100** **105**	3 11⁄16 3 ¾ 3 15⁄16 4	LSM95 LSM100 LSM105	LSE311 LSE312 LSE315 LSE400	**288** 64745	**366** 82280	**16.00** 3596.90	2340	**174.62** 6.875	**45.30** 1.783	**85.00** 3.346	LS6	LSM95 LSM100 LSM105	LSE311 LSE312 LSE315 LSE400	**203.20** 8.000	**50** 2.0	**132** 5.2	**134** 5.3
110 **115**	4 3⁄16 4 ¼ 4 7⁄16 4 ½	LSM110 LSM115	LSE403 LSE404 LSE407 LSE408	**316** 71040	**427** 95993	**18.60** 4181.39	1970	**203.20** 8.000	**46.90** 1.846	**90.00** 3.543	LS7	LSM110 LSM115	LSE403 LSE404 LSE407 LSE408	**231.78** 9.125	**64** 2.5	**140** 5.5	**142** 5.6
120 **125** **130**	4 11⁄16 4 ¾ 4 15⁄16 5	LSM120 LSM125 LSM130	LSE411 LSE412 LSE415 LSE500	**363** 81606	**496** 111505	**22.20** 4990.69	1740	**222.25** 8.750	**54.00** 2.126	**95.00** 3.740	LS8	LSM120 LSM125 LSM130	LSE411 LSE412 LSE415 LSE500	**266.70** 10.500	**76** 3.0	**154** 6.1	**156** 6.1
135 **140**	5 3⁄16 5 ¼ 5 7⁄16 5 ½	LSM135 LSM140	LSE503 LSE504 LSE507 LSE508	**422** 94869	**585** 131513	**25.80** 5799.99	1570	**241.30** 9.500	**55.60** 2.189	**98.40** 3.874	LS9	LSM135 LSM140	LSE503 LSE504 LSE507 LSE508	**279.40** 11.000	**76** 3.0	**166** 6.5	**168** 6.6
150 **155** **160**	5 11⁄16 5 ¾ 5 15⁄16 6	LSM150 LSM155 LSM160A	LSE511 LSE512 LSE515 LSE600	**459** 103187	**664** 149273	**29.40** 6609.30	1450	**254.00** 10.000	**55.60** 2.189	**98.40** 3.874	LS10	LSM150 LSM155 LSM160A	LSE511 LSE512 LSE515 LSE600	**295.28** 11.625	**82** 3.2	**172** 6.8	**174** 6.9

LIGHT SN/SD RANGE SUPPORT
SN01 - SD10

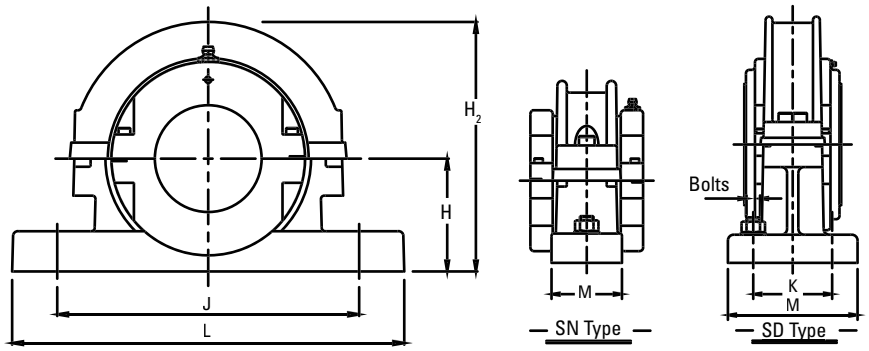

Shaft (d)		Spherical Roller Bearing Reference	SN/SD Reference	H	H_2	J x K	L x M	Bolts
mm	in.			**mm**	**mm**	**mm**	**mm**	
35 **40**	1 3/16 1 1/4 1 7/16 1 1/2	SN01	SN 508 SN 509	**60**	**135**	**170**	**205 x 60**	2 x M12
45 **50**	1 11/16 1 3/4 11 5/16 2	SN02	SN 511	**70**	**155**	**210**	**255 x 70**	2 x M16
55 **60** **65**	2 3/16 2 1/4 2 7/16 2 1/2	SN03	SN 513 SN 515	**80**	**180**	**234**	**275 x 70**	2 x M16
70 **75**	2 11/16 2 3/4 2 15/16 3	SN04	SN 516 SN 517	**95**	**208**	**260**	**315 x 90**	2 x M20
80 **85** **90**	3 3/16 3 1/4 3 7/16 3 1/2	SN05 SN05A SN05B	SN 518 SN 519 SN 520	**100** **112** **112**	**230** **242** **242**	**290** **290** **320**	**345 x 100** **345 x 100** **380 x 110**	2 x M20 2 x M20 2 x M24
95 **100** **105**	3 11/16 3 3/4 3 15/16 4	SN06	SN 522	**125**	**265**	**350**	**410 x 120**	2 x M24
110 **115**	4 3/16 4 1/4 4 7/16 4 1/2	SN07 SN07A	SN 524 SN 526	**140** **150**	**300** **310**	**350** **380**	**410 x 120** **445 x 130**	2 x M24 2 x M24
120 **125** **130**	4 11/16 4 3/4 4 15/16 5	SN08	SN 528	**150**	**354**	**420**	**500 x 150**	2 x M30
135 **140**	5 3/16 5 1/4 5 7/16 5 1/2	SN09 SN09A	SN 530 SN 532	**160** **170**	**369** **379**	**450** **470**	**530 x 160** **550 x 160**	2 x M30 2 x M30
150 **155** **160**	5 11/16 5 3/4 5 15/16 6	SD10	SD 3134	**170**	**379**	**430 x 100**	**510 x 180**	4 x M24

LIGHT SN/SD RANGE BEARINGS AND HOUSINGS

160 MM TO 305 MM (6 7/16 IN. TO 12 IN.)

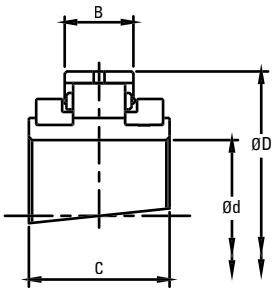

Expansion BX

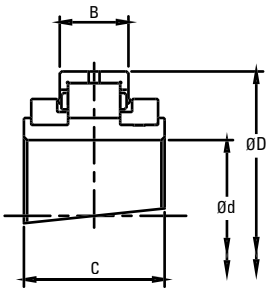

Retained BR

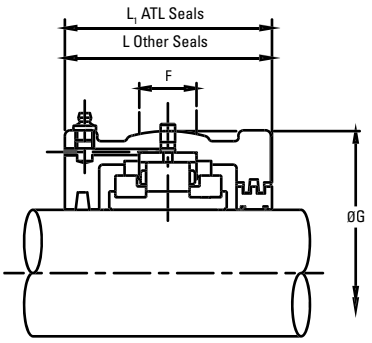

Shaft (d)		Reference		Bearings Ratings							Housing Reference						
		Add **BR** for Retained Add **BX** for Expansion e.g. LSE215BR		Dynamic C_r	Static C_{or}	Axial C_a	Max	D	B, B_1	C	ATL Seals Add **HRTL** for Retained Add **HXTL** for Expansion e.g. LS4HRTL	Other Seal Types Add HR for Retained Add HX for Expansion e.g. LSE215HR		G	F	L	L_1
mm	in.			**kN** lb.	**kN** lb.	**kN** lb.	RPM	**mm** in.	**mm** in.	**mm** in.				**mm** in.	**mm** in.	**mm** in.	**mm** in.
160 **170**	6 7/16 6 1/2	LSM160 LSM170A	LSE607 LSE608	**583** 131064	**792** 178049	**33.00** 7419	1320	**273.05** 10.750	**60.30** 2.374	**109.00** 4.291	LS11	LSM160 LSM170A	LSE607 LSE608	**311.15** 12.250	**76** 3.0	**172** 6.8	**192** 7.6
170 **175** **180**	6 11/16 6 3/4 6 15/16 7	LSM170 LSM175 LSM180	LSE611 LSE612 LSE615 LSE700	**524** 117800	**828** 186142	**36.40** 8183	1220	**285.75** 11.250	**55.50** 2.185	**109.00** 4.291	LS12	LSM170 LSM175 LSM180	LSE611 LSE612 LSE615 LSE700	**323.85** 12.750	**70** 2.8	**172** 6.8	**200** 7.9
190 **200**	7 3/16 7 1/4 7 1/2 7 15/16 8	LSM190 LSM200	LSE703 LSE704 LSE708 LSE715 LSE800	**614** 138033	**990** 222561	**41.00** 9217	1070	**311.15** 12.250	**60.30** 2.374	**106.00** 4.173	LS13	LSM190 LSM200	LSE703 LSE704 LSE708 LSE715 LSE800	**358.78** 14.125	**86** 3.4	**172** 6.8	**200** 7.9
220 **230**	8 7/16 8 1/2 8 7/8 9	LSM220 LSM230	LSE807 LSE808 LSE814 LSE900	**708** 159165	**1168** 262577	**49.00** 11016	930	**342.90** 13.500	**63.50** 2.500	**115.00** 4.528	LS14	LSM220 LSM230	LSE807 LSE808 LSE814 LSE900	**387.35** 15.250	**82** 3.2	**178** 7.0	**216** 8.5
240 **250** **260**	9 1/2 9 3/4 10	LSM240 LSM250 LSM260A	LSE908 LSE912 LSE1000	**744** 167258	**1289** 289779	**57.80** 12994	820	**374.65** 14.750	**66.70** 2.626	**122.00** 4.803	LS15	LSM240 LSM250 LSM260A	LSE908 LSE912 LSE1000	**419.10** 16.500	**90** 3.5	**188** 7.4	**222** 8.7
260 **270** **280**	10 7/16 10 1/2 10 3/4 11	LSM260 LSM270 LSM280	LSE1007 LSE1008 LSE1012 LSE1100	**848** 190638	**1502** 337663	**66.80** 15017	730	**406.40** 16.000	**69.00** 2.717	**128.00** 5.039	LS16	LSM260 LSM270 LSM280	LSE1007 LSE1008 LSE1012 LSE1100	**454.00** 17.874	**95** 3.7	**204** 8.0	**232** 9.1
300 **305**	11 1/2 12	LSM300 LSM305	LSE1108 LSE1200	**929** 208848	**1665** 374307	**78.20** 17580	650	**438.15** 17.250	**74.60** 2.937	**143.00** 5.630	LS17	LSM300 LSM305	LSE1108 LSE1200	**489.00** 19.252	**98** 3.9	**216** 8.5	**248** 9.8

LIGHT SN/SD RANGE SUPPORT
SD11 - SD17

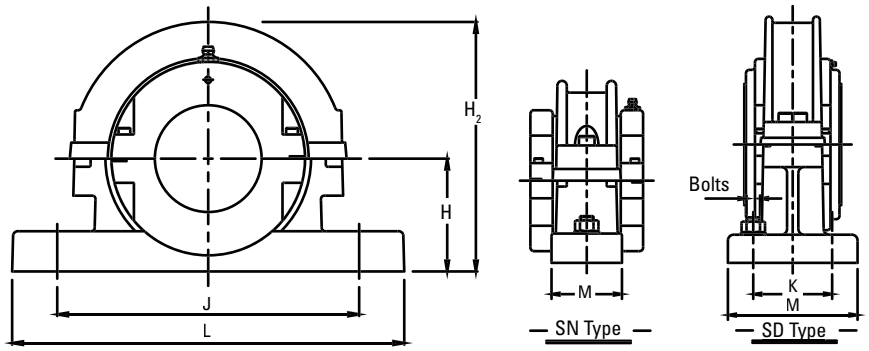

Shaft (d)		Spherical Roller Bearing Reference	SN/SD Reference	H	H_2	J x K	L x M	Bolts
mm	in.			**mm**	**mm**	**mm**	**mm**	
160 **170**	6 7/16 6 1/2	SD11	SD 3136	**180**	**396**	**450 x 110**	**530 x 190**	4 x M24
170 **175** **180**	6 11/16 6 3/4 6 15/16 7	SD12 SD12A	SD 3138 SD 3140	**190** **210**	**417** **437**	**480 x 120** **510 x 130**	**560 x 210** **610 x 230**	4 x M24 4 x M30
190 **200**	7 3/16 7 1/4 7 1/2 7 15/16 8	SD13	SD 3144	**220**	**457**	**540 x 140**	**640 x 240**	4 x M30
220 **230**	8 7/16 8 1/2 8 7/8 9	SD14	SD 3148	**240**	**510**	**600 x 150**	**700 x 260**	4 x M30
240 **250** **260**	9 1/2 9 3/4 10	SD15	SD 3152	**260**	**545**	**650 x 160**	**770 x 280**	4 x M36
260 **270** **280**	10 7/16 10 1/2 10 3/4 11	SD16 SD16A	SD 3156 SD 3160	**280** **300**	**589** **609**	**670 x 160** **710 x 190**	**790 x 280** **830 x 310**	4 x M36 4 x M36
300 **305**	11 1/2 12	SD17	SD 3164	**320**	**662**	**750 x 200**	**880 x 330**	4 x M36

MEDIUM SN/SD RANGE BEARING AND HOUSING

135 MM TO 260 MM (5 3⁄16 IN. TO 10 IN.)

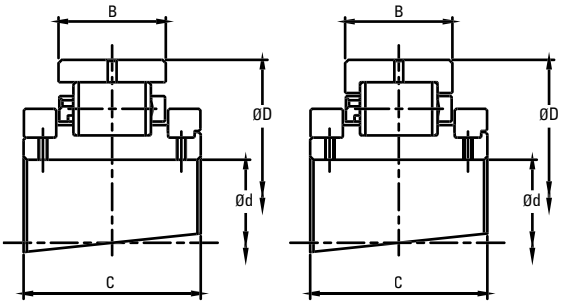

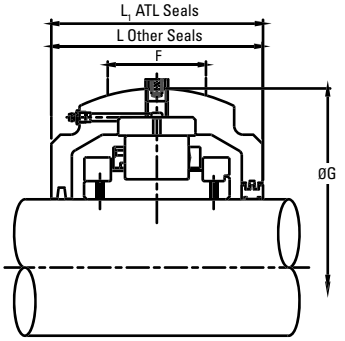

Shaft (d)		Reference		Bearings Ratings							Housing Reference						
		Add **BR** for Retained Add **BX** for Expansion e.g. MSE503BR		Dynamic C_r	Static C_{or}	Axial C_a	Max	D	B	C	ATL Seals Add **HRTL** for Retained Add **HXTL** for Expansion e.g. MS30HRTL	Other Seal Types Add **HR** for Retained Add **HX** for Expansion e.g. MSE503HR		G	F	L	L_1
mm	in.			**kN** lb.	**kN** lb.	**kN** lb.	RPM	**mm** in.	**mm** in.	**mm** in.				**mm** in.	**mm** in.	**mm** in.	**mm** in.
135 **140** **150**	5 3⁄16 5 1⁄4 5 7⁄16 5 1⁄2 6	MSM135 MSM140 MSM150A[1]	MSE503 MSE504 MSE507 MSE508 MSE600A[1]	**600** 134885	**817** 183669	**45.40** 10206	1450	**273.05** 10.750	**66.70** 2.626	**117.50** 4.626	MS30 MS30E0548	MSM135 MSM140 MSM150A	MSE503 MSE504 MSE507 MSE508 MSE600A	**323.85** 12.750	**90** 3.543	**186** 7.323	**188** 7.402
150 **155** **160**	5 11⁄16 5 3⁄4 5 15⁄16 6	MSM150 MSM155 MSM160A[1]	MSE511 MSE512 MSE515 MSE600	**730** 164111	**1034** 232452	**52.40** 11780	1320	**292.10** 11.500	**68.30** 2.689	**123.80** 4.874	MS31 MS31E0548	MSM150 MSM155 MSM160A	MSE511 MSE512 MSE515 MSE600	**336.55** 13.250	**95** 3.74	**202** 7.953	**204** 8.031
160 **170**	6 7⁄16 6 1⁄2	MSM160 MSM170	MSE607 MSE608	**842** 189289	**1175** 264151	**61.40** 13803	1200	**317.50** 12.500	**83.30** 3.280	**140.00** 5.512	MS32	MSM160 MSM170	MSE607 MSE608	**368.30** 14.500	**95** 3.74	**206** 8.11	**232** 9.134
175 **180**	6 11⁄16 6 3⁄4 6 15⁄16 7	MSM175 MSM180	MSE611 MSE612 MSE615 MSE700	**927** 208398	**1357** 305066	**71.20** 16006	1120	**330.20** 13.000	**83.30** 3.280	**140.00** 5.512	MS33	MSM175 MSM180	MSE611 MSE612 MSE615 MSE700	**381.00** 15.000	**95** 3.74	**222** 8.74	**242** 9.528
190 **200**	7 1⁄4 7 1⁄2 7 15⁄16 8	MSM190 MSM200	MSE704 MSE708 MSE715 MSE800	**1013** 227731	**1516** 340810	**80.00** 17985	960	**368.30** 14.500	**90.50** 3.563	**156.00** 6.417	MS34	MSM190 MSM200	MSE704 MSE708 MSE715 MSE800	**425.5** 16.752	**105** 4.134	**235** 9.252	**258** 10.157
220 **230**	8 1⁄2 8 7⁄8 9	MSM220 MSM230	MSE807 MSE814 MSE900	**1138** 255833	**1668** 374981	**89.80** 20188	850	**393.70** 15.500	**90.50** 3.563	**163.00** 6.147	MS35	MSM220 MSM230	MSE807 MSE814 MSE900	**457.20** 18.000	**110** 4.331	**242** 9.528	**274** 10.787
240 **250** **260**	9 1⁄2 9 3⁄4 10	MSM240 MSM250 MSM260	MSE908 MSE912 MSE1000	**1360** 305740	**2130** 478843	**98.80** 22211	750	**431.80** 17.000	**96.80** 3.811	**170.00** 6.693	MS36	MSM240 MSM250 MSM260	MSE908 MSE912 MSE1000	**495.30** 19.500	**118** 4.646	**248** 9.764	**280** 11.024

[1]When ordering these bearings with ATL seals the housing must contain the E0548 suffix.

MEDIUM SN/SD RANGE SUPPORT
SN30 - SD36A

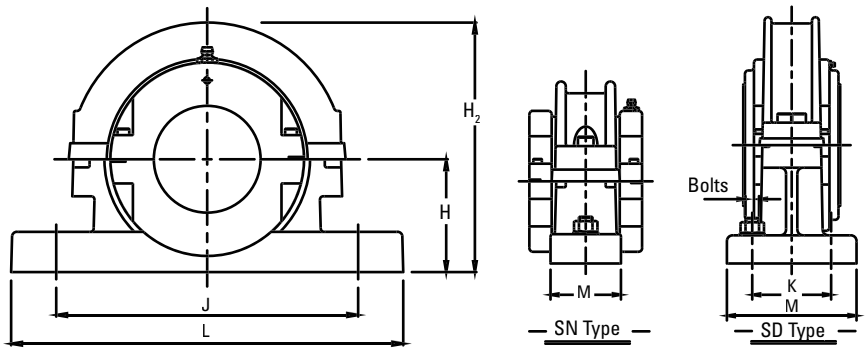

Shaft (d)		Spherical Roller Bearing Reference	SN/SD Reference	H	H_2	J x K	L x M	Bolts
mm	in.			**mm**	**mm**	**mm**	**mm**	
135 **140** **150**	5 3/16 5 1/4 5 7/16 5 1/2 6	SN30 SD30	SNL532 SD/SNL3134	**170** **170**	**397** **397**	**470** **430 x 100**	**550 x 160** **510 x 180**	2 x M30 4 x M24
150 **155** **160**	5 11/16 5 3/4 5 15/16 6	SD31	SD3136 SNL3136	**180**	**410**	**450 x 110**	**530 x 190**	4 x M24
160 **170**	6 7/16 6 1/2	SD32	SD3138 SNL3138	**190**	**456**	**480 x 120**	**560 x 210**	4 x M24
175 **180**	6 11/16 6 3/4 6 15/16 7	SD33	SD3140 SNL3140	**210**	**482**	**510 x 130**	**610 x 230**	4 x M30
190 **200**	7 1/4 7 1/2 7 15/16 8	SD34	SD3144 SNL3144	**220**	**510**	**540 x 140**	**640 x 240**	4 x M30
220 **230**	8 1/2 8 7/8 9	SD35	SD/SNL3148	**240**	**566**	**600 x 150**	**700 x 260**	4 x M30
240 **250** **260**	9 1/2 9 3/4 10	SD36 SD36A	SD/SNL3152 SD/SNL3156	**260** **280**	**614** **634**	**650 x 160** **670 x 160**	**770 x 280** **790 x 280**	4 x M36 4 x M36

MEDIUM SN/SD RANGE BEARING AND HOUSING

270 MM TO 400 MM (10 ½ IN. TO 16 IN.)

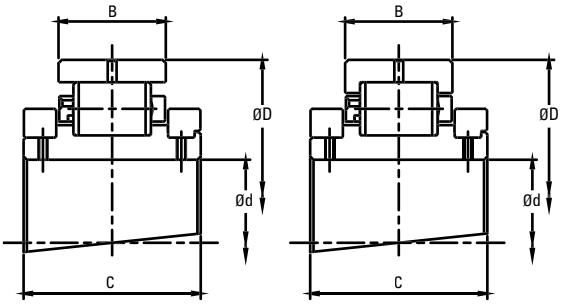

Expansion BX

Retained BR

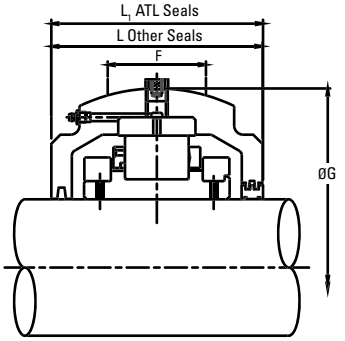

Shaft (d)		Reference		Bearings Ratings							Housing Reference						
		Add **BR** for Retained Add **BX** for Expansion e.g. MSE503BR		Dynamic C_r	Static C_{or}	Axial C_a	Max	D	B	C	ATL Seals Add **HRTL** for Retained Add **HXTL** for Expansion e.g. MS30HRTL	Other Seal Types Add **HR** for Retained Add **HX** for Expansion e.g. MSE503HR		G	F	L	L_1
mm	in.			**kN** lb.	**kN** lb.	**kN** lb.	RPM	**mm** in.	**mm** in.	**mm** in.				**mm** in.	**mm** in.	**mm** in.	**mm** in.
270 **280**	10 ½ 10 ¾ 11	MSM270 MSM280	MSE1008 MSE1012 MSE1000	**1476** 331818	**2357** 529875	**113.80** 25583	670	**463.55** 18.250	**101.60** 4.000	**186.00** 7.323	MS37	MSM270 MSM280	MSE1008 MSE1012 MSE1000	527.10 20.752	130 5.118	264 10.394	300 11.811
300 **305**	11 ½ 12	MSM300 MSM305	MSE1108 MSE1200	**1587** 356771	**2644** 594395	**129.00** 29000	610	**495.30** 19.500	**103.20** 4.063	**193.00** 7.598	MS38	MSM300 MSM305	MSE1108 MSE1200	552.50 21.752	128 5.039	268 10.6	306 12.0
320 **330**	12 ½ 13	MSM320 MSM330	MSE1208 MSE1300	**1851** 416121	**3214** 722536	**144.20** 32417	550	**527.05** 20.750	**106.40** 4.189	**192.00** 7.559	MS39	MSM320 MSM330	MSE1208 MSE1300	587.40 23.126	128 5.039	298 11.732	–
340 **350** **360**	13 ½ 14	MSM340 MSM350 MSM360[1]	MSE1308 MSE1400	**2029** 456137	**3449** 775366	**159.20** 35790	500	**565.15** 22.250	**115.90** 4.563	**200.00** 7.874	MS40 MS40E0548	MSM340 MSM350 MSM360	MSE1308 MSE1400	628.70 24.752	146 5.748	305 12.008	–
380	15	MSM380	MSE1500	**1931** 434106	**3522** 791777	**174.40** 39207	460	**584.20** 23.000	**111.10** 4.374	**200.00** 7.874	MS41	MSM380	MSE1500	647.70 25.500	146 5.748	305 12.008	–
400	16	MSM400	MSE1600	**2105** 473223	**3793** 852700	**188.40** 42354	430	**615.95** 24.250	**115.90** 4.563	**200.00** 7.874	MS42	MSM400	MSE1600	685.80 27.000	146 5.748	324 12.756	–

[1]When ordering these bearings with ATL seals the housing must contain the E0548 suffix.

MEDIUM SN/SD RANGE SUPPORT
SD37 - SD42

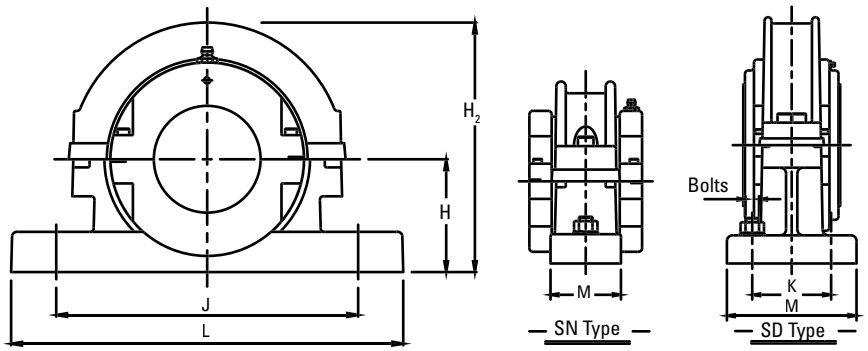

Shaft (d)		Spherical Roller Bearing Reference	SN/SD Reference	H	H_2	J x K	L x M	Bolts
mm	in.			**mm**	**mm**	**mm**	**mm**	
270 **280**	10 ½ 10 ¾ 11	SD37	SD3160 SNL3160	**300**	**682**	**710 x 190**	**830 x 310**	4 x M36
300 **305**	11 ½ 12	SD38	SD3164 SNL3164	**320**	**716**	**750 x 200**	**880 x 330**	4 x M36
320 **330**	12 ½ 13	SD39	SNL3168L	**340**	**761**	**810 x 220**	**950 x 360**	4 x M36
340 **350** **360**	13 ½ 14	SD40 SD40A	SNL3172L SNL3176L	**350** **360**	**799** **809**	**840 x 220** **870 x 220**	**1000 x 360** **1040 x 360**	4 x M36 4 x M36
380	15	SD41	SNL3180L	**380**	**841**	**950 x 240**	**1120 x 390**	4 x M42
400	16	SD42	SNL3184L	**410**	**902**	**1000 x 260**	**1170 x 420**	4 x M42

NOTES

NOTES

To view more Timken catalogs, go to www.timken.com/catalogs for interactive versions, or to download a catalog app for your smartphone or mobile device scan the QR code or go to timkencatalogs.squawqr.com.

TIMKEN

The Timken team applies their know-how to improve the reliability and performance of machinery in diverse markets worldwide. The company designs, makes and markets high-performance mechanical components, including bearings, belts, brakes, clutches, chain, couplings, gears and related mechanical power transmission products and services.

Stronger. By Design.

www.timken.com

TIMKEN

TIMKEN® SPLIT CYLINDRICAL ROLLER BEARING HOUSED UNIT CATALOG

ABOUT THE TIMKEN COMPANY

As a global leader in bearings and power transmission systems, Timken focuses on precise solution design, materials and craftsmanship to deliver reliable and efficient performance that improves productivity and uptime. Timken offers a full range of bearings, belts, chains, couplings, gears and lubricants, along with rebuild and repair services. Timken (NYSE; TKR; www.timken.com) applies its proven expertise in metallurgy, tribology and mechanical power transmission to create innovative approaches to customers' complex needs. Global availability of products and engineering talent, combined with exceptional service delivery across markets, makes Timken a preferred choice worldwide.

To view more Timken catalogs, go to www.timken.com/catalogs for interactive versions, or to download our catalog app to your smartphone or mobile device.

TIMKEN® SPLIT CYLINDRICAL ROLLER BEARING HOUSED UNIT CATALOG INDEX

TAKING THE INITIATIVE

In today's demanding industrial environment, specialist technology is, more than ever, key to improved efficiency, productivity and ultimately profitability. Timken is increasingly seen as a product brand, that routinely challenges technological boundaries.

Rapid response and flexibility result from a production facility manufacturing not only split cylindrical roller bearing assemblies but also cutting edge products for aerospace and railway. The unique relationship between manufacturer and distributors combined with innovative cellular manufacturing and modular stocking offer unparalleled availability.

From concept to design, design to production, and then throughout the life cycle of the unit, no other split bearing manufacturer works so hard to exceed your expectations.

PERFORMANCE

Timken products are designed and developed to maximize service life and minimize maintenance effort.

Timken bearings have machined brass cages with unique single-piece clips as standard; rolling elements are profiled to minimize damaging edge stresses and provide optimum rolling contact.

All supports and housings incorporate pry slots and doweled machined joints for easy separation. Supports are manufactured from high-strength cast iron and feature double webs and thick sections. Product life is thus enhanced due to high rigidity and inherent strength.

INNOVATION IN SERVICE

Producing products that push the boundaries of performance is only the beginning. Timken recognizes that users and specifiers of split cylindrical roller bearings demand logistical, technical and after-sales support.

Experienced application engineering support assists customers with concepts through consultation, commissioning, training, supply and post installation support.

Regional inventory provides excellent availability of product in the right place at the right time.

INNOVATION IN APPLICATION

The benefits of totally split-to-the-shaft bearing assemblies are long-established; subsequent savings in production and maintenance are well documented.

However, split cylindrical roller bearings are today being selected for an even wider range of applications. Additional sealing options allow our bearings to run at higher speeds and temperatures in increasingly more hostile environments.

Optimization of plant efficiency is the goal of today's maintenance engineer. The application of reliable products offering real savings is derived from increased mean time between failures. This widens periods between planned shutdowns and also eliminates unplanned downtime when utilizing advanced components accommodating split options.

ADVANTAGES OF SPLIT CYLINDRICAL ROLLER BEARING HOUSED UNITS

Split cylindrical roller bearings are essential in applications involving limited access and are highly cost effective by reducing down time and production losses during change-outs.

Split cylindrical roller bearings are completely split to the shaft. Installation and inspection times are therefore dramatically less than for solid bearings. Additionally, the time saved and costs eliminated by not having to remove ancillary equipment results in even higher potential savings.

INSPECTION SIMPLIFIED

No matter what the size or type of split cylindrical roller bearing, inspection is straightforward. Simply remove the support cap and the top half of the housing and all bearing parts become visible and accessible.

SHORT TERM PAYBACK, LONG TERM BENEFITS

Though it would be easy to cite examples where the use of split bearings results in spectacular savings, significant savings can be seen in almost any trapped application. Even modest savings can be enough to justify the use of split bearings. Depending on the application, down times for replacement of split bearings can be a small fraction of those required for solid bearings. This yields savings in both maintenance work-hours and lost production.

When such cost savings are taken into account at the bearing selection stage, it's easy to make the case for choosing Timken split cylindrical roller bearings.

FURTHER SAVINGS

Anywhere Timken bearings are used to replace other split bearing brands, the potential for savings exists. Through the use of machined brass cages as standard, inclusion of profiled rolling elements and the incorporation of high-grade materials for housings and supports, Timken bearings have the capability to extend service life leading to a reduction in bearing consumption.

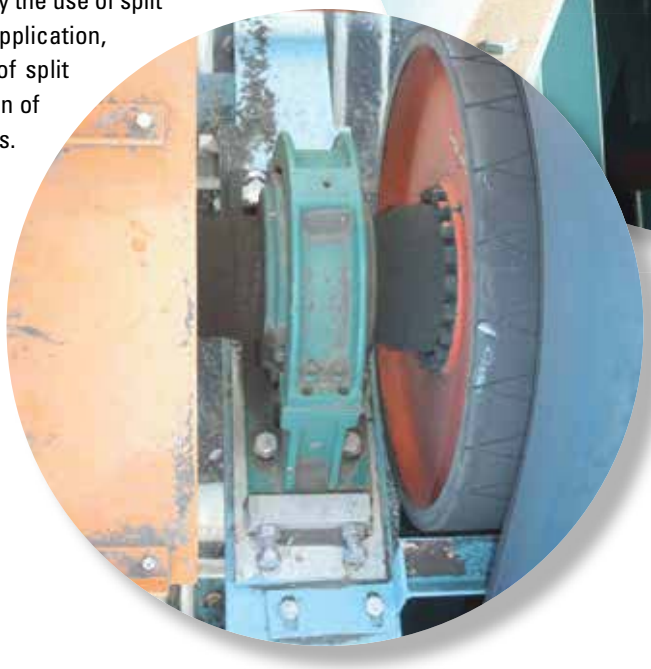

FEATURES AND BENEFITS

TABLE 1. SPLIT CYLINDRICAL ROLLER BEARING HOUSED UNIT FEATURES AND BENEFITS

Features	Benefits
All components are totally split to the shaft	Quick and easy installation. Substantial reduction in downtime compared to replacement of solid bearings
Support caps and housing halves are quickly removed	Easy visual inspection to assess the condition of the bearing (during planned maintenance)
Replacement bearing interchangeability with existing housing	Simple and economic bearing replacement
Unit accommodates initial misalignment	Simplifies installation of associated equipment
Machined brass cage as standard	Enhanced ability to accommodate higher speeds and temperatures
Innovative cage clip design	Clips retained on one cage half during assembly and disassembly
ASTM 48A – Grade 35 Cast Iron	Strength and durability
Profiled rolling elements	Minimizes damaging edge stresses

HOW TO USE THIS CATALOG

We designed this catalog to help you find the Timken bearings best suited to your equipment needs and specifications.

The product tables list split bearing housed units and components. For other bearing types, please refer to the respective Timken product catalog reference.

Timken offers an extensive range of bearings and accessories in both imperial and metric sizes. For your convenience, size ranges are indicated in millimeters and inches. Contact your Timken engineer to learn more about our complete line for the special needs of your application.

This publication contains dimensions, tolerances and load ratings, as well as engineering sections describing mounting and fitting practices for shafts and housings, internal clearances, materials and other bearing features. It provides valuable assistance in the initial consideration of the type and characteristics of the bearings that may best suit your particular needs.

ISO and ANSI/ABMA, as used in this publication, refer to the International Organization for Standardization and the American National Standards Institute/American Bearing Manufacturers Association.

Updates are made periodically to this catalog. Visit www.timken.com for the most recent version of the Timken Split Cylindrical Roller Bearing Housed Unit Catalog.

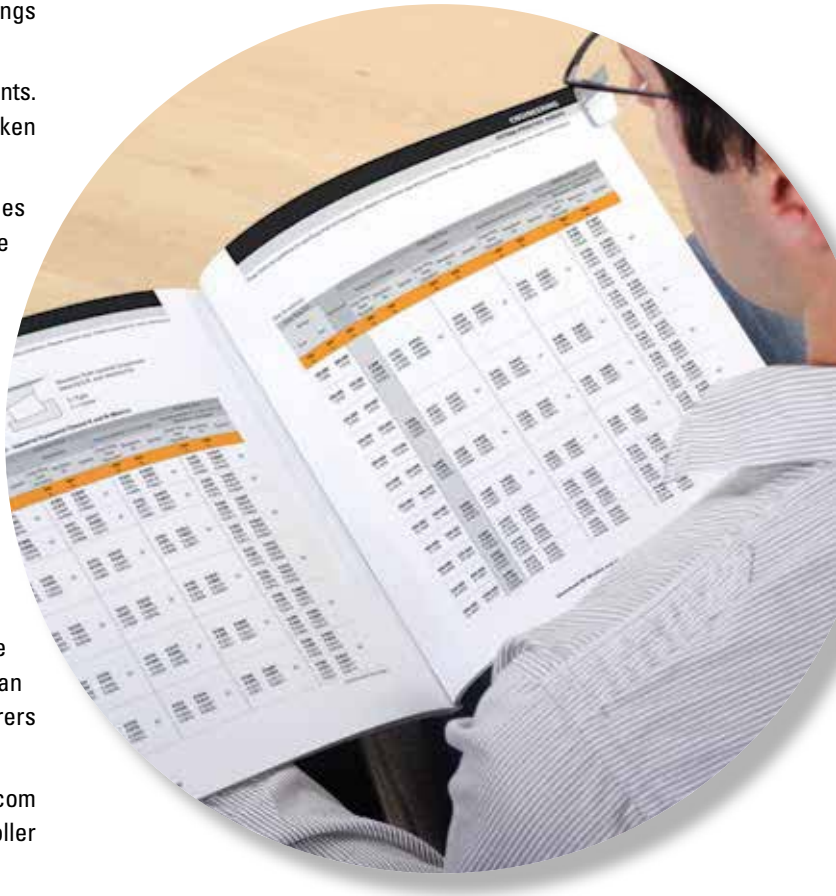

SHELF LIFE AND STORAGE OF GREASE-LUBRICATED BEARINGS AND COMPONENTS

To help you get the most value from our products, Timken provides guidelines for the shelf life of grease-lubricated ball and roller bearings, components and assemblies. Shelf life information is based on Timken and industry test data and experience.

SHELF LIFE

Shelf life should be distinguished from lubricated bearing/component design life as follows:

- Shelf life of the grease-lubricated bearing/component represents the period of time prior to use or installation.
- The shelf life is a portion of the anticipated aggregate design life. It is impossible to accurately predict design life due to variations in lubricant bleed rates, oil migration, operating conditions, installation conditions, temperature, humidity and extended storage.
- Shelf life values, available from Timken, represent a maximum limit and assume adherence to the storage and handling guidelines suggested in this catalog or by a Timken associate. Deviation from the Timken storage and handling guidelines may reduce shelf life. Any specification or operating practice that defines a shorter shelf life should be used.

Timken cannot anticipate the performance of the grease lubricant after the bearing or component is installed or placed in service.

TIMKEN IS NOT RESPONSIBLE FOR THE SHELF LIFE OF ANY BEARING/COMPONENT LUBRICATED BY ANOTHER PARTY.

SPLIT CYLINDRICAL ROLLER BEARING HOUSED UNITS ARE NOT SHIPPED PRE-GREASED.

EUROPEAN REACH COMPLIANCE

Timken lubricants, greases and similar products sold in stand alone containers or delivery systems are subject to the European REACH (Registration, Evaluation, Authorization and Restriction of Chemicals) directive. For import into the European Union, Timken can sell and provide only those lubricants and greases that are registered with ECHA (European Chemicals Agency). For further information, please contact your Timken engineer.

STORAGE

Timken suggests the following storage guidelines for our finished products (bearings, components and assemblies, referred to as "products"):

- Unless directed otherwise by Timken, products should be kept in their original packaging until they are ready to be placed into service.
- Do not remove or alter any labels or stencil markings on the packaging.
- Products should be stored in such a way that the packaging is not pierced, crushed or otherwise damaged.
- After a product is removed from its packaging, it should be placed into service as soon as possible.
- When removing a product that is not individually packaged from a bulk pack container, the container should be resealed immediately after the product is removed.
- Do not use product that has exceeded its shelf life as defined in the Timken shelf life guidelines statement.
- The storage area temperature should be maintained between 0º C (32º F) and 40º C (104º F); temperature fluctuations should be minimized.
- The relative humidity should be maintained below 60 percent and the surfaces should be dry.
- The storage area should be kept free from airborne contaminants such as, but not limited to, dust, dirt, harmful vapors, etc.
- The storage area should be isolated from undue vibration.
- Extreme conditions of any kind should be avoided.

Due to the fact that Timken is not familiar with your particular storage conditions, we strongly suggest following these guidelines. However, you may be required by circumstances or applicable government requirements to adhere to stricter storage requirements.

Most bearing components typically ship protected with a corrosion-preventive compound that is not a lubricant. These components may be used in oil-lubricated applications without removal of the corrosion-preventive compound. When using some specialized grease lubrications, we advise you to remove the corrosion-preventive compound before packing the bearing components with suitable grease.

When you receive a bearing or housed unit shipment, do not remove products from their packaging until they are ready for mounting so they do not become corroded or contaminated.

Store bearings and housed units in an appropriate atmosphere so they remain protected for the intended period.

WARNINGS

WARNING

Failure to observe the following warnings could create a risk of death or serious injury.

Proper maintenance and handling practices are critical. Always follow installation instructions and maintain proper lubrication.

Overheated bearings can ignite explosive atmospheres. Special care must be taken to properly select, install, maintain, and lubricate housed unit bearings that are used in or near atmospheres that may contain explosive levels of combustible gases or accumulations of dust such as grain, coal, or other combustible materials.

Never spin a bearing with compressed air. The components may be forcefully expelled.

CAUTION

Failure to follow these cautions may result in property damage.

Do not use damaged housed units.

When fitting the inner ring there should be an equal gap at each joint. If there are no gaps do not proceed.

Warnings for this product line are in this catalog and posted on http://www.timken.com/legal-notices/

NOTE

Do not use excessive force when mounting or dismounting the unit.

Follow all tolerance, fit, and torque recommendations.

Ensure proper alignment.

Never weld housed units.

Do not heat components with an open flame.

Do not operate at bearing temperatures above 121° C (250° F).

Never interchange components between completed bearing assemblies.

Never use a hammer and steel bar on a bearing for installation or removal. Use only a brass bar or a soft-headed mallet.

Consult your equipment designer or supplier for installation and maintenance instructions.

Never use steam or hot water when cleaning the bearings because these methods can create rust or corrosion.

Never expose any surface of a bearing to the flame of a torch.

Do not heat bearing beyond 149˚ C (300˚ F).

DISCLAIMER

This catalog is provided solely to give you analysis tools and data to assist you in your product selection. Product performance is affected by many factors beyond the control of Timken. Therefore, you must validate the suitability and feasibility of all product selections.

Timken products are sold subject to the Timken terms and Conditions of Sale, which include our limited warranty and remedy. You can find these at https://www.timken.com/legal notices/termsandconditionsofsale/.

Please consult with your Timken engineer for more information and assistance. Every reasonable effort has been made to ensure the accuracy of the information in this writing, but no liability is accepted for errors, omissions or for any other reason.

ENGINEERING

The following topics are covered within this section:

STANDARD UNIT ANATOMY

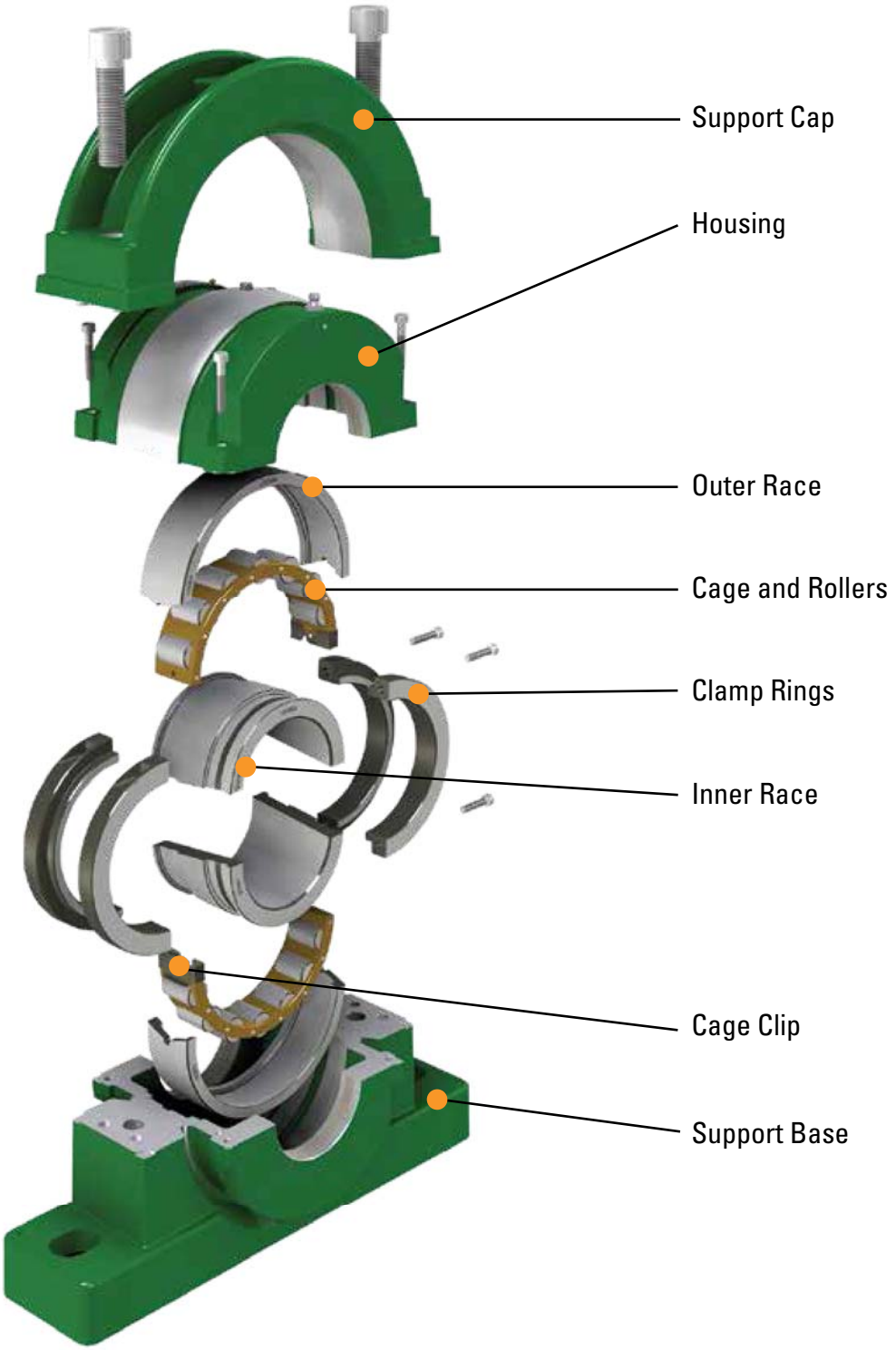

Fig. 1. Standard unit anatomy.

TECHNICAL FEATURES

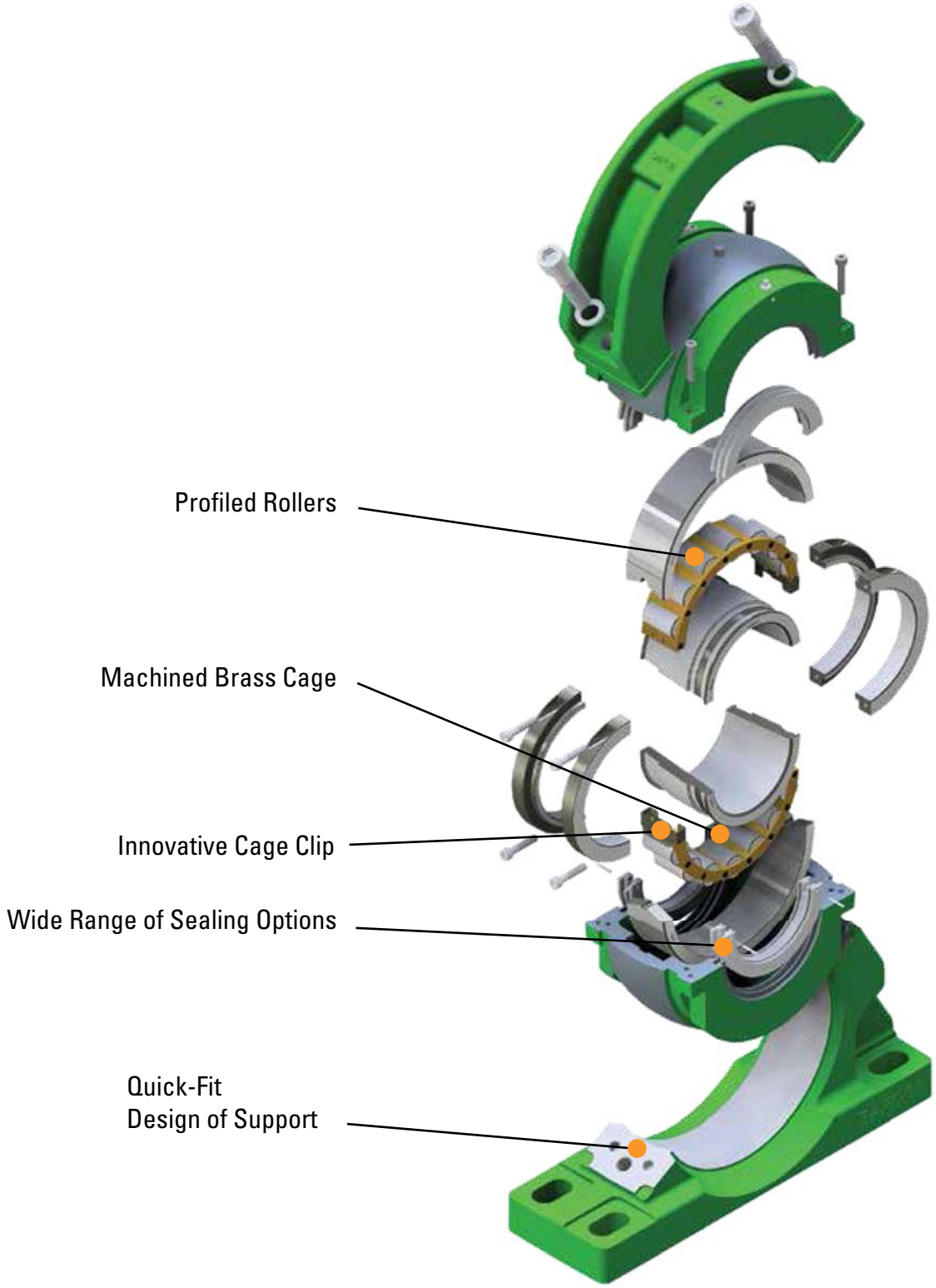

Fig. 2. Technical features.

INDUSTRY APPLICATIONS

TABLE 2. APPLICATIONS

Application	Target Markets													
	Bulk Terminals	Cement & Aggregate	Construction Materials	Food & Beverage	Forest Products & Timber	Grains & Malts	Metals	Marine	Mining & Quarrying	Power Generation	Pulp & Paper	Refining & Petrochem	Sugar	Water Treatment
Ancillary Equipment														
Crankshafts		X					X		X					
Fans & Blowers		X	X	X	X	X	X		X	X	X		X	
Gearboxes & Transmissions	X	X		X	X	X	X		X	X	X		X	
Heat Exchangers										X				
Motors		X					X		X	X	X			
Pumps & Pump Drives		X						X	X	X				X
Mechanical Handling														
Continuous Casters							X							
Conveyors	X	X	X	X	X	X	X		X	X	X		X	
Cooling Beds							X							
Elevators	X	X	X			X							X	
Line Shafting			X				X				X			
Lumber Tables & Stackers					X						X			
Overhead Cranes			X				X				X			
Screw Conveyors		X	X			X				X	X	X		X
Bucket Wheels	X						X		X	X				
Stacker Reclaimers	X						X		X	X				
Process Equipment														
Ball Mill Drives		X	X				X		X	X				
Ball Mill Trunnions		X	X				X		X	X				
Cane Knives & Slicers													X	
Crushers		X	X				X		X	X				
Drum Drier Trunnions		X										X	X	
Dryer Rolls											X			
Kiln & Mill Carrier Rollers		X							X				X	
Kiln & Mill Drives		X										X	X	
Mixer Drives		X	X	X		X					X	X		
Press Rolls			X								X			
Rotary Screens											X			X
Shredders										X	X		X	
Sugar Diffuser Drives													X	
Sugar Diffuser Under Rolls													X	
Washers		X		X					X		X		X	
Other Applications														
Hydro Electric Turbines										X				
Rotary Biological Contactors														X
Mine Winders										X				
Marine Propulsion Shafts								X						
Water Treatment Screens											X			X
Water Treatment Aerators														X

NOMENCLATURE

In order to provide our customers with clear and concise labeling, Timken has endeavored to keep things simple when creating references. The following should cover the majority of ordering situations however, as always, your local Timken engineer will be pleased to provide further assistance if required.

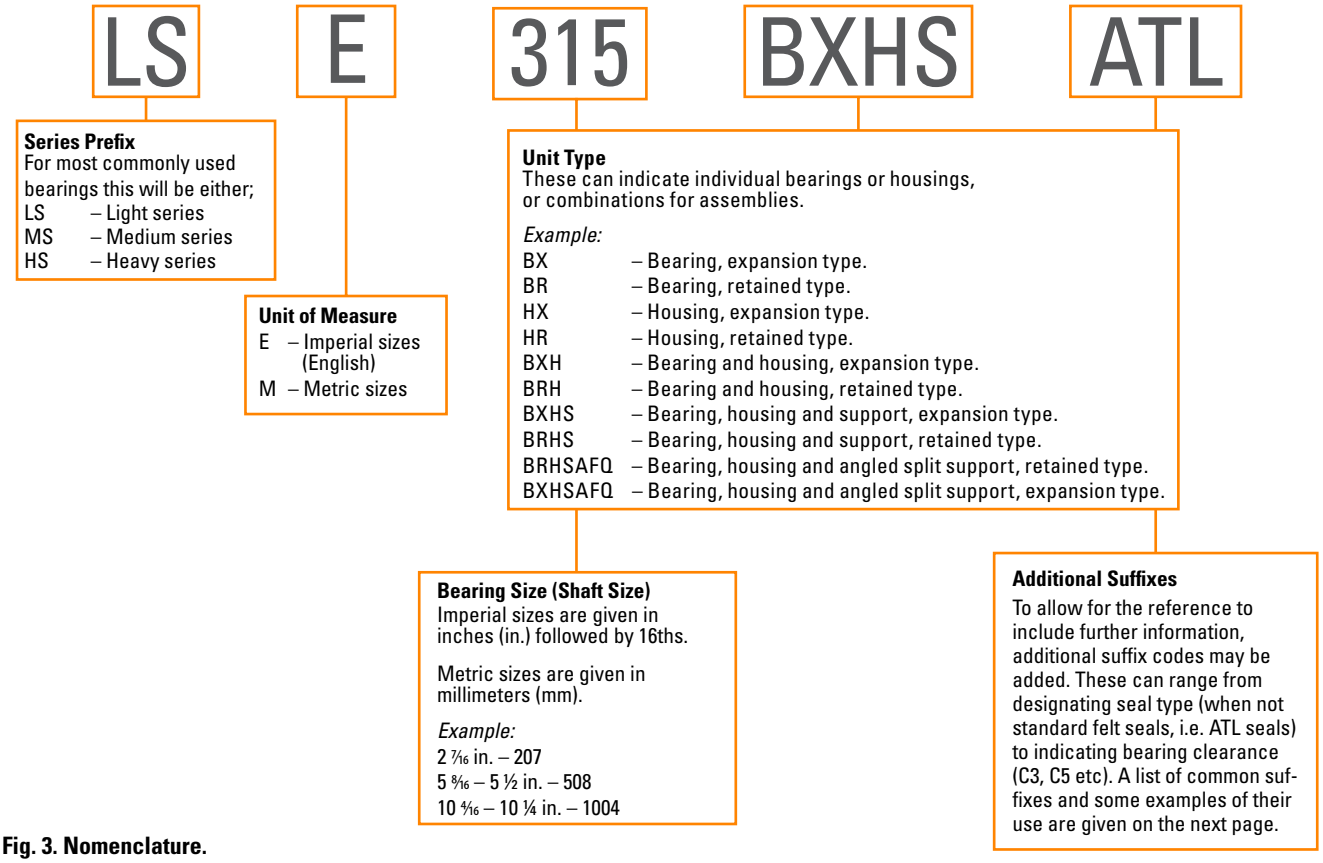

Fig. 3. Nomenclature.
For Triple Labyrinth (ATL) style housings and seals see pages 32-34.

Typical Examples

LSE108BXHATL

Light series 1½ in. bearing with housing and ATL seals.

LSE407BR

Light series 4 7/16 in. bearing retained.

MSE200BXHSATL

Medium series 2 in. expansion bearing with housing and with ATL seals.

LSE700BXHSAFQATL

Light series 7 in. bearing, housing and angled split support retained type with ATL seals .

MSE815BRHSKPS

Medium series 8 15/16 in. bearing, housing and support, retained type with Kevlar® seals.

LSE315BXHSATL

Light series 3 15/16 in. bearing, housing and support, expansion type with ATL seals.

QUICK REFERENCE TABLES

TABLE 3. SERIES PREFIXES

Series Prefixes	
LSE	Light series imperial
LSM	Light series metric
MSE	Medium series imperial
MSM	Medium series metric
HSE	Heavy series imperial
HSM	Heavy series metric
XSE	Tubular strander series imperial
XSM	Tubular strander series metric
CCE	Water cooled series imperial
CCM	Water cooled series metric

TABLE 4. UNIT TYPE REFERENCES

Unit Type References	
BX	Expansion bearing
BR	Retained bearing
HX	Expansion housing
HR	Retained housing
HG	Hanger support
BXH	Expansion bearing with housing
BRH	Retained bearing with housing
BXHG	Expansion bearing with hanger
BXHS	Expansion bearing with housing and support
BRHS	Retained bearing with housing and support
BXHF	Expansion bearing with housing and flange
BRHF	Retained bearing with housing and flange
BXHTT	Expansion bearing with housing and tension type take up
BRHTT	Retained bearing with housing and tension type take up
BXHTP	Expansion bearing with housing and pull type take up
BRHTP	Retained bearing with housing and pull type take up

TABLE 5. ADDITIONAL SUFFIXES

Examples of Additional Suffixes	
F	Axial float
AP	Air purge
ATL	Aluminium triple labyrinth
BEM	Base ends machined
BL	Brass label
BOEC	Bolt-on end cover
C2, C3, C5	Bearing clearance (ISO)
CH	Inner race bore chamfer with size e.g. CH6mm, CH11mm
E0302	Specifications for marine applications
EC	End cover
ECTL	End cover for triple labyrinth bore
ES	Electrical specification
FC	Full compliment of rollers
GE	Grease escape
HTPS	High temperature packing seal
LSR	Laminar seal rings
OB	Overbored with size e.g. OB160mm
OTL	Overbored triple labyrinth seal
RSS	Nitrile single lip seal
S1, S2, S3	Designation for tempered bearings (ISO)
SF0	Swivel fit, zero clearance
SLO	Single lipped outer
SLUB	Spherical lubrication
SNQ	SN angled split
TE	Temperature probe hole
WSRP	Single lip seal with garter spring and retaining plate
XAR	Extended antirotation pin

TABLE 6.

Light Series					
in.	mm	Support	Flange	Take Ups	
1 3/16 to 1 1/2	**35 to 40**	S01	F01	TT01	TP01
1 11/16 to 2	**45 to 50**	S02	F02	TT02	TP02
2 3/16 to 2 1/2	**60 to 65**	S03	F03	TT03	TP03
2 11/16 to 3	**70 to 75**	S04	F04	TT04	TP04
3 3/16 to 3 1/2	**80 to 90**	S05	F05	TT05	TP05
3 11/16 to 4	**100 to 105**	S06	F06	TT06	TP06
4 3/16 to 4 1/2	**110 to 115**	S07	F07	TT07	TP07
4 11/16 to 5	**120 to 130**	S08	F08	TT08	TP08
5 3/16 to 5 1/2	**135 to 140**	S09	F09	TT09	TP09
5 11/16 to 6	**150 to 155**	S10	F10	TT10	TP10
6 7/16 to 6 1/2	**160**	S11	F11	–	–
6 11/16 to 7	**170 to 180**	S12	F12	–	–
7 1/4 to 8	**190 to 200**	S13	F13	–	–
8 1/2 to 9	**220 to 230**	S14	F14	–	–
9 1/2 to 10	**240 to 250**	S15	F15	–	–
10 1/2 to 11	**260 to 280**	S16	F16	–	–
11 1/2 to 12	**300**	S17	–	–	–
12 1/2 to 13	**320 to 330**	S18	–	–	–
14	**340 to 350**	S19	–	–	–
15	**360 to 380**	S20	–	–	–
16	**400**	S21	–	–	–
17	**420**	S22	–	–	–
18	**440 to 460**	S23	–	–	–
19	**480**	S24	–	–	–
20	**500**	S25	–	–	–
21	**530**	S26	–	–	–
22	**560**	S27	–	–	–
23	**580**	S28	–	–	–
24	**600**	S29	–	–	–

TABLE 7.

Medium Series					
in.	mm	Support	Flange	Take Ups	
–	–	–	–	–	–
1 11/16 to 2	**45 to 50**	S03	F03	TT03	TP03
2 3/16 to 2 1/2	**60 to 65**	S04	F04	TT04	TP04
2 11/16 to 3	**70 to 75**	S05	F05	TT05	TP05
3 3/16 to 3 1/2	**80 to 90**	S06	F06	TT06	TP06
3 11/16 to 4	**100 to 105**	S07	F07	TT07	TP07
4 3/16 to 4 1/2	**110 to 115**	S08	F08	TT08	TP08
4 11/16 to 5	**120 to 130**	S10	F10	TT09	TP09
5 3/16 to 5 1/2	**135 to 140**	S30	F30	TT30	TP30
5 11/16 to 6	**150 to 155**	S31	F31	TT31	TP31
6 7/16 to 6 1/2	**160 to 170**	S32	F32	–	–
6 11/16 to 7	**180**	S33	F33	–	–
7 1/4 to 8	**190 to 200**	S34	F34	–	–
8 1/2 to 9	**220 to 230**	S35	F35	–	–
9 1/2 to 10	**240 to 260**	S36	F36	–	–
10 1/2 to 11	**280**	S37	F37	–	–
11 1/2 to 12	**300**	S38	F38	–	–
12 1/2 to 13	**320 to 330**	S39	–	–	–
14	**340 to 360**	S40	–	–	–
15	**380**	S41	–	–	–
16	**400**	S42	–	–	–
17	**420**	S43	–	–	–
18	**440 to 460**	S44	–	–	–
19	**480**	S45	–	–	–
20	**500**	S46	–	–	–
21	**530**	S47	–	–	–
22	**560**	S48	–	–	–
23	**580**	S49	–	–	–
24	**600**	S50	–	–	–

TABLE 8.

Heavy Series			
in.	mm	Support	Flange
–	–	–	–
–	–	–	–
–	–	–	–
–	–	–	–
–	–	–	–
3 11/16 to 4	**100 to 105**	S54	F54
4 3/16 to 4 1/2	**110 to 120**	S55	F55
4 11/16 to 5	**125 to 130**	S56	F56
5 3/16 to 5 1/2	**135 to 140**	S57	F57
5 11/16 to 6	**150 to 155**	S58	F58
6 7/16 to 6 1/2	**160 to 170**	S59	F59
6 11/16 to 7	**180**	S60	F60
7 1/4 to 8	**190 to 200**	S61	F61
8 1/2 to 9	**220 to 230**	S62	F62
9 1/2 to 10	**240 to 260**	S63	F63
11	**280**	S83	F64
12	**300**	S65	F65
13	**320 to 330**	S66	–
14	**340 to 360**	S86	–
15 to 16	**380 to 400**	S68	–
–	–	–	–
17	**420 to 440**	S89	–
18	**460**	S90	–
19	**480**	S94	–
20	**500**	S94	–
21	**530**	S94	–
22	**560**	S94	–
23	**580**	S95	–
24	**600**	S95	–

BEARING TYPES

RETAINED-TYPE BEARINGS (BR)

This bearing has integral flanges on the outer race to provide a surface for axial load. This axial load is accommodated on the inner race via the hardened clamp rings, which both align the inner race halves and provide roller guidance. In larger bearings the inner race is manufactured with integral ribs for roller guidance and axial load.

Fig. 4. Retained-type bearings (BR).

This type of bearing will locate the shaft axially as well as provide a means for taking axial load. The retained outer race must be fixed sideways against one of the housing groove shoulders using the pins and screws provided. Only one retained unit should be mounted on any particular shaft. Additional care should be taken when mounting split cylindrical roller bearing unit on shafts using other, non-split types of bearings (ball, cylindrical and spherical roller, etc.) to ensure there are no other locating bearings used.

EXPANSION-TYPE BEARINGS (BX)

This bearing is designed for radial loads only. As in the retained type bearing, the rollers are guided on the inner race by the hardened shoulders of the clamping rings.

Fig. 5. Expansion-type bearings (BX).

During expansion or contraction of the shaft, rollers are free to move across the outer race offering virtually no resistance to axial movement. Limits for the amount of axial movement are given in the assembly and maintenance section (pages 36-39).

SUPPORT TYPES

Timken bearings and housings may be mounted in a variety of support units according to the application and loading constraints. A number of variants are available as standard types with other unit types available on request. Timken offers a design and manufacturing facility to produce custom units to cover more specialized applications.

PILLOW BLOCK (SUPPORT) TYPE

This is by far the most popular method for mounting Timken units. These supports are manufactured from high strength, ASTM 48A grade 35 cast iron. This, combined with the robust design, provides a stable, rigid base, allowing the split bearing fitted to give optimum performance.

Fig. 6. Pillow block support type.

FLANGE UNITS

In applications where bearings need to be mounted against horizontal or vertical faces, Timken flange units provide a simple means of achieving this goal. Again, the use of ASTM 48A Grade 35 cast iron ensures a durable unit.

Fig. 7. Flange units.

HANGER UNITS

A compact unit commonly used for supporting screw conveyors or similar equipment.

Fig. 8. Hanger units.

TAKE-UP UNITS

These sliding units can be used to effectively tension conveyor and elevator systems. Both pull and push types are available.

Fig. 9. Take-up units.

SERIES COMPARISON

Timken offers a range of bearing series, providing solutions for a wide range of operating conditions. Light Series, Medium Series and Heavy Series offer an increasing ability to accommodate higher loads. As the series increases the speed capability reduces.

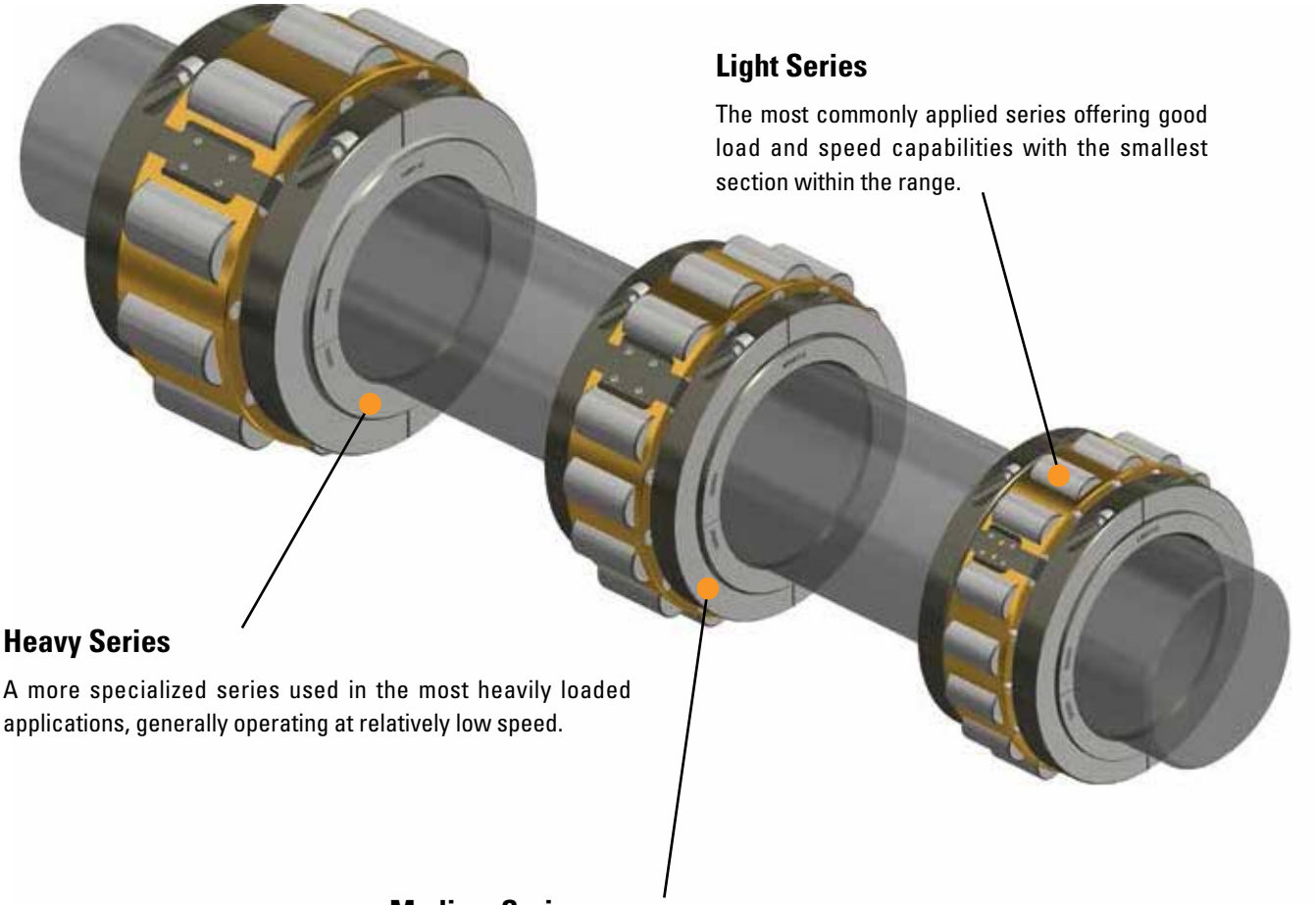

Light Series

The most commonly applied series offering good load and speed capabilities with the smallest section within the range.

Heavy Series

A more specialized series used in the most heavily loaded applications, generally operating at relatively low speed.

Medium Series

An increased section offers additional load carrying capacity. This series is typically used in difficult, heavily loaded applications where shock load and vibration may be present.

Fig. 10. Series comparison.

BEARING SELECTION

DYNAMIC LOADING

Selection of Timken split cylindrical roller bearings must take into account the effects of both radial and axial loads. These loads must be considered independently of each other.

RADIAL LOAD CONSIDERATIONS

The basic rating life of a bearing can be derived from the formula laid down in ISO 281:2007.

$$L_{10} = (C/P)^{10/3} \text{ (Millions of Revolutions)} \quad – (i)$$

In the majority of cases where the speed remains constant then the life can be expressed in hours from the formula.

$$L_{10}h = \frac{(10^6) \times L_{10}}{60 \times n} \quad – (ii)$$

Substituting – (i)

$$L_{10}h = \frac{(10^6) \times}{60 \times n} \left(\frac{C}{P}\right)^{10/3} \quad – (ii)$$

L_{10} = Basic rating life (90 percent reliability), 106 revolutions

$L_{10}h$ = Basic rating life (90 percent reliability), hours

C = Bearing dynamic capacity, kN

N = Speed, min^{-1}

P = Equivalent bearing load

This calculation assumes for the load components considered for an individual bearing, that the shaft system is a beam resting on rigid, movement free supports. Elastic deformations in the bearing, housing or machine structure are not taken into account.

EQUIVALENT LOAD "P"

As previously stated radial and axial loads must be considered separately for split cylindrical roller bearings. For the calculation of theoretical life only radial loads are considered.

F_r = RADIAL LOADS

The value of F_r is that calculated from standard mechanical formula, the impact of additional forces resulting from external influences must also be considered.

TABLE 9.

Load Condition	Factor F_z
Steady	1.0 to 1.3
Light shock or out of balance	1.3 to 2.0
Heavy shock or vibration	2.0 to 3.0

F_z = FACTOR

Under the influence of the above conditions.

$P = F_r \times F_z$

The required theoretical bearing life is based upon a number of factors, including reliability, accessibility and service considerations. Generally life values should be as follows:

TABLE 10.

Guide to Life Values	
Machine used intermittently	500 to 2,000 hours
Occasional use	5,000 to 10,000 hours
Normal operation	20,000 to 50,000 hours
Continuous operation	75,000 to 100,000 hours
High reliability	> 100,000

ADJUSTED LIFE CALCULATION

The L_{10} fatigue life calculation is based upon the rating life of a large number of identical bearings expressed as a number of revolutions operating at a constant speed. This rating life is reached or exceeded by 90 percent of these before the first evidence of fatigue appears.

The above definition applies to bearings operating under optimum conditions. Variations in operating conditions will lead to changes in the life of these bearings.

ISO 281 allows for an adjusted life calculation:

$$Lhna = a_1 \times a_2 \times a_3 \times L_{10}h$$

Where

Lhna = Adjusted life

$L_{10}h$ = Rating life in hours

a_1 = Life adjustment factor, failure probability other than 10 percent

a_2 = Life adjustment factor, material properties

a_3 = Life adjustment factor, operating conditions

a_1 FACTOR

In cases where a failure rate other than 10 percent is required, then an a_1 factor as in the table below should be applied.

TABLE 11.

Adjustment Factor						
Failure Probability %	10	5	4	3	2	1
Factor a_1	1.00	0.62	0.53	0.44	0.33	0.21

a_2 FACTOR

This factor takes into account the material properties.

a_3 FACTOR

The a_3 factor considers all operational parameters that influence fatigue life. The most obvious of these is lubrication. The highest life values are achieved where a state of hydrodynamic lubrication exists, in this state no metal-to-metal contact occurs.

Decreasing effectiveness of lubricant due to decreasing film thickness or effects of contamination will reduce the a_3 factor.

Due to the interrelationships between materials adjustment factor a_2 and operating adjustment factor a_3, a common factor a_{23} is frequently used.

a_{23} FACTOR

$$a_{23} = a_2 + a_3$$

The a_{23} factor can be taken from Fig. 11.

a_{23} Life Adjustment Factor

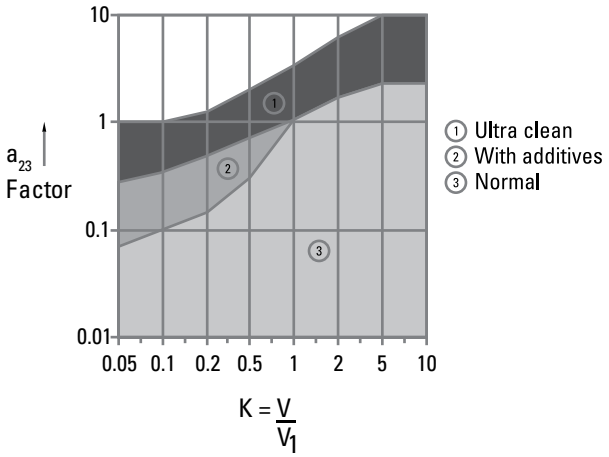

V_1 = Rated viscosity (depends on bearing size and operating speed)

V = Operating viscosity (depends on original viscosity and operating temperature)

Fig. 11. Life adjustment factor.

Values for V and V_1 are obtained from the following graphs:

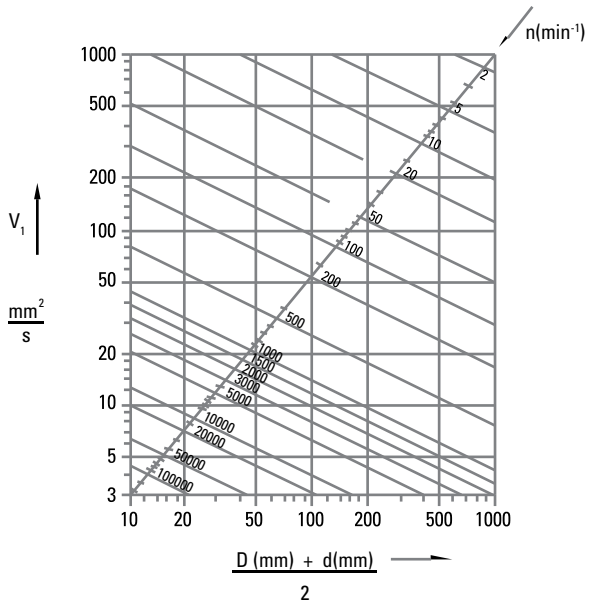

Fig. 12. V and V_1 values.

Where

D = Bearing outside diameter

d = Bearing bore

n = Shaft speed (RPM)

V_1 is then read off the vertical axis.

Using the operating temperature and nominal lubricant viscosity, the value for operating viscosity, V, is read from the horizontal axis.

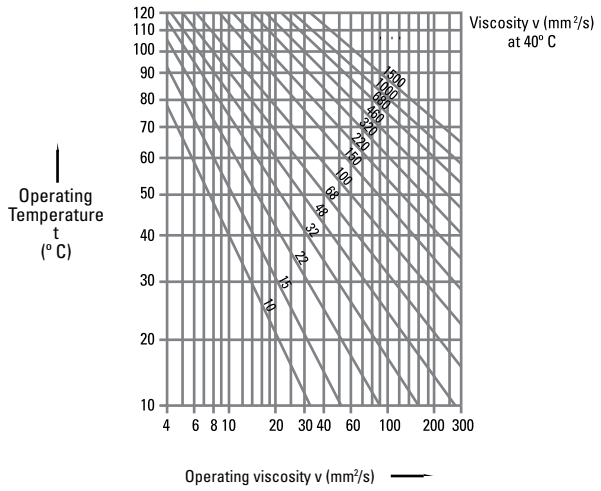

Fig. 13. Operating viscosity.

STATIC LOADING

In situations where bearings rotate slowly (<10 RPM), oscillate slowly, are stationary for prolonged periods or subject to high shock loads, it is important to check that no permanent deformations occur between rolling elements and raceways at peak load.

The basic static load rating is defined in ISO 76:1987 and refers to the contact stress at the centre of the most heavily loaded rolling element/raceway contact area. For roller bearings this value is 4000 Mpa. This will result in a permanent deformation of 0.0001 of the roller diameter.

The required static load rating can be determined from:

Co = Fs x Po

Co = Basic static load rating
Po = Equivalent static load
Fs = Static safety factor

Guidelines for the static safety factor Fs can be found in the table below:

TABLE 12.

Nature of Duty	Requirements for Duty		
	Low	Medium	High
Smooth, no vibration	1.0	1.5	3.0
Normal	1.0	1.5	3.5
Heavy	>2.5	>3.0	>4.0

BEARING RATINGS

TABLE 13. LIGHT SERIES

Shaft (d)		Bearing Ratings			
		Dynamic C_r	Static C_{or}	Axial C_a	Max
mm	in.	**kN** lb.	**kN** lb.	**kN** lb.	RPM
35 **40**	1 3/16 1 1/2	**65** 14613	**68** 15287	**3.20** 719.38	5400
45 **50**	1 11/16 2	**83** 18659	**87** 19558	**3.60** 809.30	4630
55 **65**	2 3/16 2 1/2	**103** 23155	**115** 25853	**5.40** 1213.95	3940
70 **75**	2 11/16 3	**138** 31024	**161** 36194	**7.60** 1708.53	3310
80 **90**	3 3/16 3 1/2	**187** 42039	**231** 51931	**12.40** 2787.59	2790
100 **105**	3 11/16 4	**288** 64745	**366** 82280	**16.00** 3596.90	2340
110 **115**	4 3/16 4 1/2	**316** 71040	**427** 95993	**18.60** 4181.39	1970
120 **130**	4 11/16 5	**363** 81606	**496** 111505	**22.20** 4990.69	1740
135 **140**	5 3/16 5 1/2	**422** 94869	**585** 131513	**25.80** 5799.99	1570
150 **155**	5 11/16 6	**459** 103187	**664** 149273	**29.40** 6609.30	1450
160	6 7/16 6 1/2	**538** 120947	**792** 178049	**33.00** 7419	1320
170 **180**	6 11/16 7	**524** 117800	**828** 186142	**36.40** 8183	1220
190 **200**	7 1/4 8	**614** 138033	**990** 222561	**41.00** 9217	1070
220 **230**	8 1/2 9	**708** 159165	**1168** 262577	**49.00** 11016	930
240 **250**	9 1/2 10	**744** 167258	**1289** 289779	**57.80** 12994	820
260 **280**	10 1/2 11	**848** 190638	**1502** 337663	**66.80** 15017	730
300 **305**	11 1/2 12	**929** 208848	**1665** 374307	**78.20** 17580	650
320 **330**	12 1/2 13	**920** 206824	**1674** 376330	**89.00** 20008	590
340 **350**	14	**1022** 229755	**1965** 441745	**99.60** 22391	540
360 **380**	15	**1224** 275166	**2431** 546511	**110.40** 24819	500
400	16	**1107** 248864	**2266** 509417	**115.60** 25988	460
420	17	**1146** 257631	**2418** 543588	**121.00** 27202	430
440 **460**	18	**1185** 266399	**2469** 555053	**127.20** 28596	410
480	19	**1348** 303042	**2965** 666559	**132.60** 29810	380
500	20	**1392** 312934	**3139** 705675	**137.80** 30979	360
530	21	**1431** 321702	**3316** 745466	**140.60** 31608	340
560	22	**1472** 330919	**3490** 784583	**142.40** 32013	330
580	23	**1616** 363291	**3841** 863491	**144.00** 32372	310
600	24	**1660** 373183	**4033** 906654	**146.80** 33002	300

TABLE 14. MEDIUM SERIES

Shaft (d)		Bearing Ratings			
		Dynamic C_r	Static C_{or}	Axial C_a	Max
mm	in.	**kN** lb.	**kN** lb.	**kN** lb.	RPM
–	–	–	–	–	–
45 **50**	1 11/16 2	**121** 27202	**127** 28551	**6.20** 1394	4350
55 **65**	2 3/16 2 1/2	**168** 37768	**190** 42714	**8.80** 1978	3680
70 **75**	2 11/16 3	**258** 58001	**300** 67443	**10.60** 2383	3080
80 **90**	3 3/16 3 1/2	**297** 66768	**353** 79358	**17.80** 4002	2520
100 **105**	3 11/16 4	**388** 87226	**491** 110381	**25.00** 5620	2130
110 **115**	4 3/16 4 1/2	**454** 102063	**592** 133087	**31.20** 7014	1820
120 **130**	4 11/16 5	**525** 102063	**700** 133087	**38.20** 7014	1600
135 **140**	5 3/16 5 1/2	**600** 134885	**817** 183669	**45.40** 10206	1450
150 **155**	5 11/16 6	**730** 164111	**1034** 232453	**52.40** 11780	1320
160 **170**	6 7/16 6 1/2	**842** 189289	**1175** 264151	**61.40** 13803	1200
180	6 11/16 7	**927** 208398	**1357** 305066	**71.20** 16006	1120
190 **200**	7 1/4 8	**1013** 227732	**1516** 340810	**80.00** 17985	960
220 **230**	8 1/2 9	**1138** 255833	**1668** 374981	**89.80** 20188	850
240 **260**	9 1/2 10	**1354** 304391	**2117** 475921	**98.80** 22211	750
270 **280**	10 1/2 11	**1476** 331818	**2357** 529875	**113.80** 25583	670
300 **305**	11 1/2 12	**1587** 356772	**2644** 594395	**129.00** 29000	610
320 **330**	12 1/2 13	**1723** 387346	**2922** 656892	**144.20** 32417	550
340 **360**	14	**2029** 456137	**3403** 765025	**159.20** 35790	500
380	15	**1931** 434106	**3522** 791777	**174.40** 39207	460
400	16	**2105** 473223	**3793** 852701	**188.40** 42354	430
420	17	**2324** 522456	**4164** 936105	**202.00** 45411	400
440 **460**	18	**2215** 497952	**4183** 940376	**216.00** 48559	380
480	19	**2445** 549658	**4594** 1032773	**230.00** 51706	360
500	20	**2453** 551456	**4923** 1106734	**244.00** 54853	340
530	21	**2702** 607434	**5415** 1217340	**258.00** 58001	330
560	22	**2851** 640930	**5740** 1290403	**272.00** 61148	310
580	23	**2982** 670380	**6173** 1387746	**286.00** 64295	300
600	24	**2972** 668132	**6185** 1390443	**300.00** 67443	290

Axial load ratings (C_a) assume the use of EP additives or oil lubrication, otherwise use 50 percent of values.
Higher loads and speeds may be permissible. Please contact a Timken engineer for more information.

TABLE 15. HEAVY SERIES

Shaft (d)		Bearing Ratings			
		Dynamic C_r	Static C_{or}	Axial C_a	Max
mm	in.	**kN** lb.	**kN** lb.	**kN** lb.	RPM
–	–	–	–	–	–
–	–	–	–	–	–
–	–	–	–	–	–
–	–	–	–	–	–
–	–	–	–	–	–
100 **105**	3 11/16 4	**653** 146800	**783** 176025	**31.20** 7014	1820
110 **120**	4 3/16 4 1/2	**656** 147475	**801** 180072	**39.10** 8790	1640
125 **130**	4 11/16 5	**753** 169281	**974** 218964	**49.00** 11016	1500
135 **140**	5 3/16 5 1/2	**928** 208623	**1265** 284383	**58.80** 13219	1340
150 **155**	5 11/16 6	**1037** 233127	**1325** 297872	**69.40** 15602	1220
160 **170**	6 7/16 6 1/2	**1196** 268871	**1576** 354299	**79.20** 17805	1110
175 **180**	6 11/16 7	**1330** 298996	**1867** 419718	**89.00** 20008	1030
190 **200**	7 1/4 8	**1597** 359020	**2285** 513688	**99.60** 22391	880
220 **230**	8 1/2 9	**1665** 374307	**2455** 551906	**109.40** 24594	760
240 **260**	9 1/2 10	**1896** 426238	**2789** 626992	**130.80** 29405	700
280	11	**2202** 495029	**3507** 788405	**153.00** 34396	620
300	12	**2337** 525379	**3650** 820553	**174.40** 39207	560
320	13	**2718** 611031	**4093** 920143	**198.80** 44692	500
340 **360**	14	**2935** 659814	**4973** 1117975	**213.60** 48019	460
380 **400**	15 16	**3195** 718265	**5238** 1177550	**250.80** 56382	420
–	–	–	–	–	–
420 **440**	17	**3582** 805266	**6377** 1433607	**275.80** 62002	360
460	18	**3807** 855848	**6611** 1486212	**302.40** 67982	340
–	–	–	–	–	–
500 **530**	20 21	**4660** 1047610	**8183** 1839612	**347.00** 78009	310
–	–	–	–	–	–
560	22	**4795** 1077959	**9412** 2115902	**382.60** 86012	280
580 **600**	23 24	**4951** 1113029	**9451** 2124669	**400** 89924	270

Axial load ratings (C_a) assume the use of EP additives or oil lubrication, otherwise use 50 percent of values.
Higher loads and speeds may be permissible. Please contact a Timken engineer for more information.

AXIAL CONSIDERATIONS

AXIAL LOAD

Bearing selection, on an axial load basis, must be considered independently from the radial load.

1. Calculate the axial loads acting on the bearing.
2. Multiply each load by the appropriate dynamic factor fz.
3. Combine these loads to determine the effective axial load P_a.
4. Select a bearing having a C_a value greater than the product of P_a x fdn, d.n is the product of the shaft size in millimeter and the speed in RPM. To determine fdn use the velocity graph below.

AXIAL RATINGS C_a

These ratings are for constant loads with oil or extra pressure greases. If greases without extra pressure additives are applied then the catalog rating must be decreased by 50 percent. In instances where bearings operate at over 50 percent of their catalog speed rating and over 50 percent of their axial load ratings (C_a) then recessed shafts should be considered. Please contact a Timken engineer for assistance.

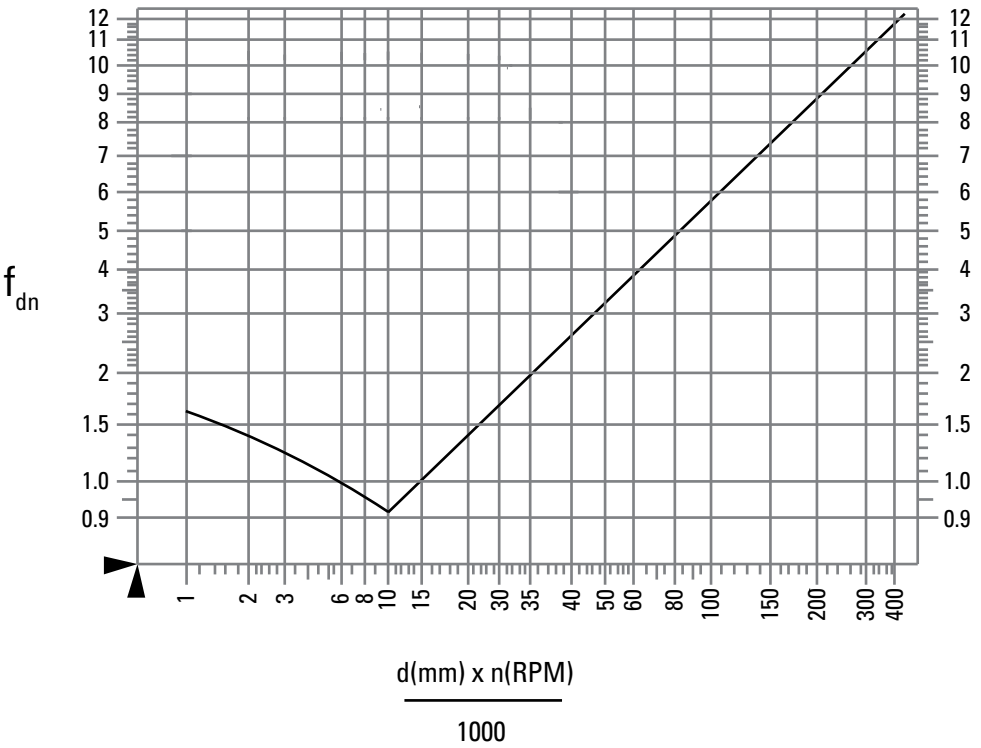

VELOCITY
Applies only to axial loads on br retained bearings.
Bearing bore = d
Bearing RPM = n

Fig. 14. Velocity graph.

BEARING CLEARANCE AND TEMPERATURE CONSIDERATIONS

Timken bearings are manufactured to give an ISO CN clearance as standard. At specific customer request, bearings may be produced with any clearance to suit a particular application. When assessing the requirement for special clearances, it is particularly important to consider the differential temperature between shaft and housing. It also should be noted that an increase in bearing clearance will lead to a small reduction in bearing capacity. For example, typically a C_3 clearance will reduce capacity by 5 percent and C_5 clearance by 10 percent.

Timken bearings also can be produced as C_2. This clearance is smaller than CN and is typically used in applications involving shock or reciprocating loads.

Cleanliness of component parts when fitting will have a direct impact on the running clearance of the bearing. This is of particular importance when fitting new bearings into existing cast iron or refitting bearings after maintenance. Special care must be taken to remove build-ups of aged grease and other contaminants in order to avoid reducing the bearing clearance when fitted.

When selecting bearings for use at elevated temperatures, consideration also should be given to the bearings' dimensional stability. Timken bearings are tempered to give stability up to 140° C (284° F). In order to operate at higher temperatures, bearings must be specially heat-treated. This process will lead to a reduction in capacity as a result of the reduced hardness.

The designations for specially heat-treated bearings are in line with those quoted in ISO standards. The effects of temperature stabilization are detailed in the table shown.

TABLE 16.

Operating Temperature	200° C 392° F	250° C 482° F	300° C 572° F
Designation	S1	S2	S3
Reduction in Capacity	10%	25%	40%

SUPPORT LOADS AND BEARING FREQUENCIES

Throughout the Timken range, the split cylindrical roller bearing supports have been designed to provide a rigid and stable base to enable the associated bearing to operate to its full potential. With this in mind, all types of Timken split cylindrical roller bearing housings and supports are manufactured from ASTM 48A – Grade 35 cast iron as a minimum and include strengthening webs and ribs to provide a highly robust unit. In order to complement the inherent strength, we recommend that careful consideration be given to the siting and mounting of the support unit.

To determine a support's suitability, one should consider the resultant effective load derived in the bearing selection process and the direction of that load. The diagram shown indicates the area in which the full C_{or} rating of the bearing may be applied. Should the direction of the applied load be outside this area it may be necessary to consider alternative designs or materials. Timken has a proven track record of innovative solutions and would be happy to provide assistance.

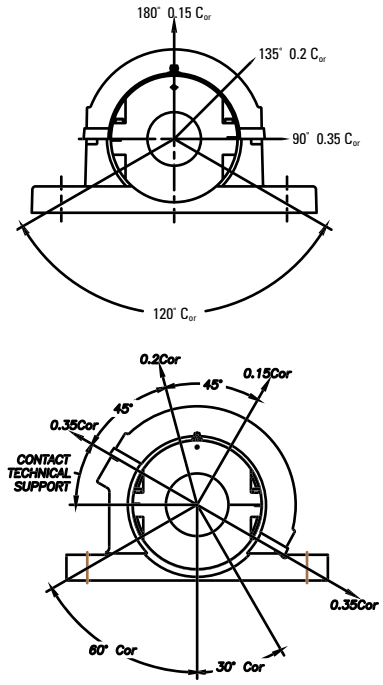

Fig. 15. C_{or} rating application.

Condition monitoring is the collection, storage, comparison and evaluation of data taken to establish the running condition of a machine. The data can be made up of several parameters, for example, electric current, pressure, brush wear, vibration and temperature, to name a few. Vibration analysis is the area of condition monitoring concerned with evaluating and identifying the source of vibration within a system and assessing its severity and hence proposing the required maintenance action.

The individual components of any bearing will exhibit frequency characteristics which will identify it within a system subject to vibration analysis. For Timken bearings these characteristic frequencies are detailed in the tables opposite. The values given are for a nominal speed of 1 RPM. To obtain the correct frequency required for vibration analysis software, multiply by the speed of rotation in RPM.

For further information on condition monitoring services Please contact a Timken engineer.

BEARING FREQUENCY TABLES (HZ)

TABLE 17. LIGHT SERIES

		Inner Race	Outer Race	Roller	Cage
mm	in.	hz	hz	hz	hz
35 **40**	1 3/16 1 1/2	5.878	4.122	2.760	0.412
45 **50**	1 11/16 2	5.852	4.148	2.847	0.415
60 **65**	2 3/16 2 1/2	6.932	5.068	3.140	0.422
70 **75**	2 11/16 3	6.902	5.098	3.252	0.425
80 **90**	3 3/16 3 1/2	8.017	5.983	3.370	0.427
100 **105**	3 11/16 4	8.089	5.911	3.137	0.422
110 **115**	4 3/16 4 1/2	9.109	6.891	3.538	0.431
120 **130**	4 11/16 5	9.100	6.900	3.569	0.431
135 **140**	5 3/16 5 1/2	9.087	6.913	3.612	0.432
150 **155**	5 11/16 6	10.159	7.841	3.819	0.436
160	6 7/16 6 1/2	10.162	7.838	3.809	0.435
170 **180**	6 11/16 7	12.223	9.777	4.442	0.444
190 **200**	7 1/4 8	12.204	9.796	4.515	0.445
220 **230**	8 1/2 9	12.171	9.829	4.645	0.447
240 **250**	9 1/2 10	13.154	10.846	5.152	0.452
260 **280**	10 1/2 11	13.118	10.882	5.319	0.453
300 **305**	11 1/2 12	13.087	10.913	5.472	0.455
320 **330**	12 1/2 13	13.028	10.972	5.795	0.457
340 **350**	14	15.125	12.875	6.182	0.460
360 **380**	15	16.133	13.867	6.580	0.462
400	16	17.150	14.850	6.92	0.464
420	17	18.156	15.844	7.319	0.466
440 **460**	18	19.165	16.835	7.694	0.468
480	19	19.166	16.834	7.684	0.468
500	20	20.177	17.823	8.038	0.469
530	21	21.175	18.825	8.479	0.471
560	22	22.184	19.816	8.841	0.472
580	23	23.254	20.746	8.744	0.472
600	24	23.208	20.792	9.078	0.473

TABLE 18. MEDIUM SERIES

		Inner Race	Outer Race	Roller	Cage
mm	in.	hz	hz	hz	hz
–	–	–	–	–	–
45 **50**	1 11/16 2	5.988	4.012	2.432	0.401
60 **65**	2 3/16 2 1/2	7.091	4.909	2.659	0.409
70 **75**	2 11/16 3	7.153	4.847	2.506	0.404
80 **90**	3 3/16 3 1/2	7.091	4.909	2.659	0.409
100 **105**	3 11/16 4	8.205	5.795	2.818	0.414
110 **115**	4 3/16 4 1/2	8.143	5.857	2.981	0.418
120 **130**	4 11/16 5	8.105	5.895	3.088	0.421
135 **140**	5 3/16 5 1/2	8.082	5.918	3.157	0.423
150 **155**	5 11/16 6	9.225	6.775	3.188	0.423
160 **170**	6 7/16 6 1/2	8.107	5.893	3.083	0.421
180	6 11/16 7	9.192	6.808	3.281	0.425
190 **200**	7 1/4 8	9.119	6.881	3.505	0.430
220 **230**	8 1/2 9	9.161	6.839	3.372	0.427
240 **260**	9 1/2 10	10.218	7.782	3.628	0.432
270 **280**	10 1/2 11	10.162	7.838	3.808	0.435
300 **305**	11 1/2 12	11.207	8.793	4.082	0.440
320 **330**	12 1/2 13	12.287	9.713	4.217	0.442
340 **360**	14	11.202	8.798	4.100	0.440
380	15	12.141	9.859	4.769	0.448
400	16	12.169	9.831	4.651	0.447
420	17	12.195	9.805	4.548	0.446
440 **460**	18	14.257	11.743	5.122	0.452
480	19	14.273	11.727	5.057	0.451
500	20	15.265	12.735	5.489	0.455
530	21	15.249	12.751	5.559	0.455
560	22	15.241	12.759	5.597	0.456
580	23	16.277	13.723	5.831	0.457
600	24	16.252	13.748	5.951	0.458

The above figures are unitary values. For the appropriate frequency, multiply by application RPM.

TABLE 19. HEAVY SERIES

		Inner Race	Outer Race	Roller	Cage
mm	in.	hz	hz	hz	hz
–	–	–	–	–	–
–	–	–	–	–	–
–	–	–	–	–	–
–	–	–	–	–	–
–	–	–	–	–	–
100 **105**	3 11/16 4	6.073	3.927	2.222	0.393
110 **120**	4 3/16 4 1/2	5.983	4.017	2.446	0.402
125 **130**	4 11/16 5	7.114	4.886	2.601	0.407
135 **140**	5 3/16 5 1/2	8.259	5.741	2.690	0.410
150 **155**	5 11/16 6	7.190	4.810	2.422	0.401
160 **170**	6 7/16 6 1/2	7.159	4.841	2.491	0.403
175 **180**	6 11/16 7	8.243	5.757	2.727	0.411
190 **200**	7 1/4 8	8.221	5.779	2.779	0.413
220 **230**	8 1/2 9	8.102	5.898	3.097	0.421
240 **260**	9 1/2 10	8.131	5.869	3.013	0.419
280	11	9.197	6.803	3.267	0.425
300	12	9.192	6.808	3.280	0.425
320	13	9.246	6.754	3.132	0.422
340 **360**	14	10.224	7.776	3.609	0.432
380 **400**	15 16	10.250	7.750	3.530	0.431
420 **440**	17	11.263	8.737	3.895	0.437
460	18	10.170	7.830	3.781	0.435
–	–	–	–	–	–
500 **530**	20 21	10.172	7.828	3.773	0.435
560	22	12.174	9.826	4.630	0.447
580 **600**	23 24	12.240	9.760	4.378	0.444

The above figures are unitary values. For the appropriate frequency, multiply by application RPM.

SHAFT CONSIDERATIONS

It is essential that the shaft on to which the bearing is to be mounted has been produced to the correct size and tolerance for the operating conditions. If replacing a bearing in an existing system, the shaft must be checked to establish if any wear or damage has taken place. The table below may be followed for both the manufacture of new shafts and the inspection of existing shafts.

TABLE 20. SHAFT CONSIDERATIONS

Shaft Dia.	dn<50000 & C/P>10	50000<dn<150000 & C/P>10	50000<dn<150000 & C/P<10	dn>150000	Cylindricity of Shaft
Over - Incl.	h9	h8	h7	h6	IT6
mm in.	**mm** in.	**mm** in.	**mm** in.	**mm** in.	**mm** in.
0 - 50 0 - 2	**-62** -2.5	**-39** -1.5	**-25** -1	**-16** -0.6	**-16** -0.6
50 - 80 2 - 3	**-74** -3	**-46** -1.8	**-30** -1.2	**-19** -0.7	**-19** -0.7
80 - 120 3 - 5	**-87** -3.5	**-54** -2.1	**-35** -1.4	**-22** -0.9	**-22** -0.9
120 - 180 5 - 7	**-100** -3.9	**-63** -2.5	**-40** -1.6	**-25** -1	**-25** -1
180 - 250 7 - 10	**-115** -4.5	**-72** -2.8	**-46** -1.8	**-29** -1.2	**-29** -1.2
250 - 315 10 - 12 ½	**-130** -5.1	**-81** -3.2	**-52** -2	**-32** -1.3	**-32** -1.3
315 - 400 12½ - 15 ½	**-140** -5.5	**-89** -3.5	**-57** -2.2	**-36** -1.4	**-36** -1.4
400 - 500 15½ - 19 ½	**-155** -6.1	**-97** -3.8	**-63** -2.5	**-40** -1.6	**-40** -1.6
19½ - 24" **500 - 600 mm**	**-175** -6.9	**-110** -4.3	**-70** -2.8	**-44** -1.7	**-44** -1.7

dn value = shaft size (mm) x RPM
C = Bearing dynamic capacity (kN)
P = Equivalent bearing load

RECESS MOUNTING

In applications where the resultant axial load exceeds 50 percent of the C_a rating for the bearing, the shaft design should include either a recess for bearing seating or grooves to accommodate retaining rings. Such an arrangement should also be considered if the unit is subjected to shock loads, fluctuations in temperature over 100° C (212° F) or the shaft is vertical.

The dimensions for producing an appropriate recess or for governing the position and size of the retaining rings if used are derived from table 21.

TABLE 21. RECESS MOUNTING

Journal Diameter d	Shoulder Diameter D	Fillet Radii	Shoulder Height B	Recess Width R	Squareness of Abutment Faces
mm in.	**mm** in.	**mm** in.	**mm** in.	**mm** in.	**mm** in.
40 - 90 1 ½- 3 ½	**d + 5** d + ¼	**1.2** 3⁄64	**2.5** ⅛	**C + 0.1** **C + 0.3** C + 0.004 C + 0.012	**0.1** 0.004
Over 90 - 150 Over 3 ½ - 6	**d + 10** d + ⅜	**2.0** 5⁄64	**5.0** 3⁄16	**C + 0.15** **C + 0.40** C + 0.006 C + 0.016	**0.1** 0.004
Over 155 Over 6	**d + 10** d + ⅜	**2.3** 3⁄32	**5.0** **3⁄16**	**C + 0.2** **C + 0.5** C + 0.008 C + 0.02	**0.1** 0.004

N.B. Width of recesses for standard bearings maybe different from that used for existing products. Please consult a Timken engineer for bearings suitable for other recess sizes.

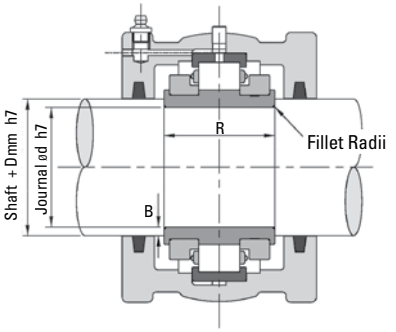

Fig. 16. Recess Mounting.

SEALING ARRANGEMENTS

Any bearing, housing and support unit that is not suitably sealed against its surrounding environment is unlikely to achieve its full potential, either in terms of performance or life span. The prevention of ingress of foreign materials and contaminants is paramount and should be considered as early in the selection process as possible.

A wide variety of sealing solutions are available to users of Timken products as off-the-shelf arrangements. This range will cover the vast majority of operating environments found throughout all industries. To cover those situations where a proprietary arrangement is not suitable, Timken is able to work closely with designers and end users to develop and manufacture custom solutions tailored to specific applications.

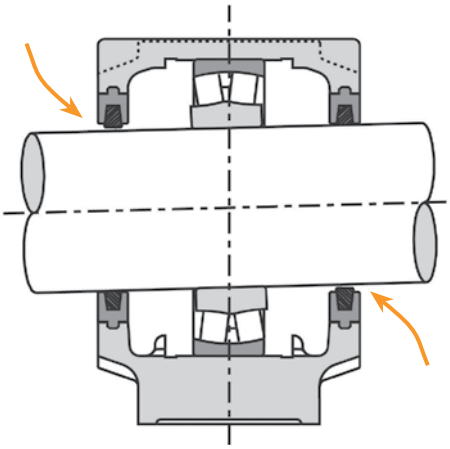

Fig. 17. Seal ineffective.

Fig. 18. Steel industry applications are ideal for Timken Split Cylindrical Roller Bearing Housed Unit.

Timken units have inherent advantages over traditional solid bearing arrangements when considering sealing. The spherical location between housing and support ensures that whichever type of seal is used, it will always remain concentric to the shaft.

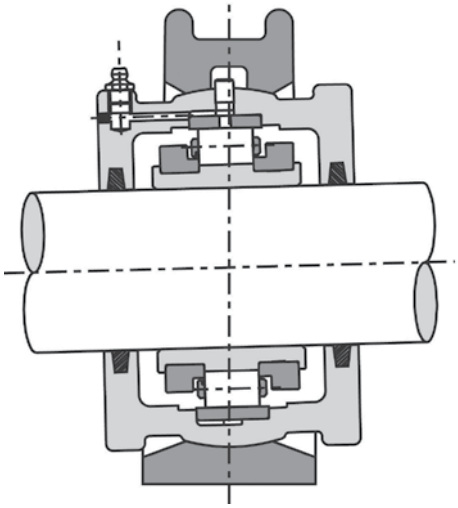

Fig. 19. Seal remains concentric.

Fig. 20. Timken Split Cylindrical Roller Bearing Housed Unit is shown here in a steel industry application.

ALUMINIUM TRIPLE LABYRINTH

A precision machined, non-contacting seal suitable for both high speed and general applications. Once fitted the seal revolves with the shaft. The seal grips the shaft via two split O-rings fitted to the bore of the seal. Timken triple labyrinth seals are fitted with high-temperature Viton cord as standard.

Max. Speed	As Bearing
Temp. Range	-20° C to +175° C (-4° F to + 347° F)
Shaft Finish	3.2µm Ra
Suffix Letters	**ATL**

Fig. 21. Aluminium Triple Labyrinth.

KEVLAR® PACKING SEAL

This recent addition to the sealing range has proved highly effective in areas having the potential for fine particle contaminants such as cement or ash. Please consult a Timken engineer for more information.

Max. Speed	As bearing
Temp. Range	-100° C to +280° C (-148° F to + 536° F)
Shaft Finish	1.6µm Ra
Suffix Letters	**KPS**

Fig. 22. Kevlar Packing Seal.

VITON SINGLE LIP

For environments involving moderate liquid splashing but not submersion. Should be avoided where abrasive particles are also present as this can lead to shaft wear in the seal area.

Max. Speed	dN(mm)<150000
Temp. Range	-34° C to +204° C (-30° F to + 400° F)
Shaft Finish	3.2µm Ra
Suffix Letters	**RSS**

Note: d = shaft diameter, N = RPM

Fig. 23. Viton Single Lip.

HIGH-TEMPERATURE PACKING

A self-lubricating high temperature packing seal based around PTFE and graphite.

Max. Speed	dN(mm)<150000
Temp. Range	-60° C to + 300° C (-76° F to + 572° F)
Shaft Finish	1.2µm Ra
Suffix Letters	**HTPS**

Note: d = shaft diameter, N = RPM

Fig. 24. High-Temperature Packing.

FELT SEAL

This type of seal is supplied as standard with all Timken housings up to a bore size of 12 inch. Consisting of felt strips made from blended fibers. Seals are supplied dry and need to be soaked in oil prior to fitting.

Max. Speed	dN(mm)<150000
Temp. Range	-60° C to +100° C (-76° F to +212° F)
Shaft Finish	1.6µm Ra

Note: d = shaft diameter, N = RPM

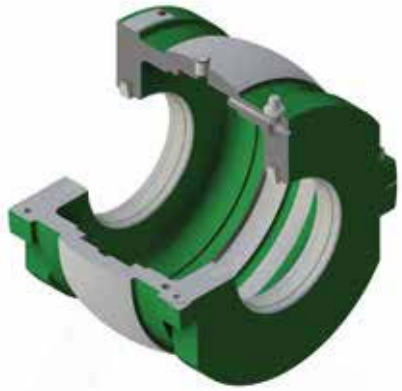

Fig. 25. Felt Seal.

SINGLE-LIP WITH GARTER SPRING AND RETAINING PLATE

A more specialized seal for very wet environments with heavy splash. This type of seal is not suitable for continuous submersion without due consideration being given to sealing of the housing joint and any other possible points of liquid entry. Please consult a Timken engineer for more information.

Max. Speed	dN(mm)<150000
Temp. Range	-20° C to +100° C (-4° F to + 212° F)
Shaft Finish	0.8µm Ra
Suffix Letters	**WSRP**

Note: d = shaft diameter, N = RPM

Fig. 26. Single-Lip with Garter Spring and Retaining Plate.

LABYRINTH GREASE GROOVE

For shaft sizes over 12 in., housings are supplied with a close-fitting labyrinth groove machined into the housing. No additional seal is added. For harsh environments, alternative sealing arrangements are available.

Max. Speed	As Bearing
Temp. Range	As Bearing
Shaft Finish	3.2µm Ra
Suffix Letters	**LAB**

Fig. 27. Labyrinth Grease Groove.

COMBINATION SEAL

This seal combines a labyrinth grease seal with grease purge and the strip seal of your choice (felt, RSS, HTPS or KPS). This combination is ideal for harsh environments with high levels of contamination. Only available for shaft sizes above 12 inches.

Max. Speed	As per the chosen strip seal type.
Temp. Range	As per the chosen strip seal type.
Shaft Finish	1.6µm Ra
Suffix Letters	**LABLUB**

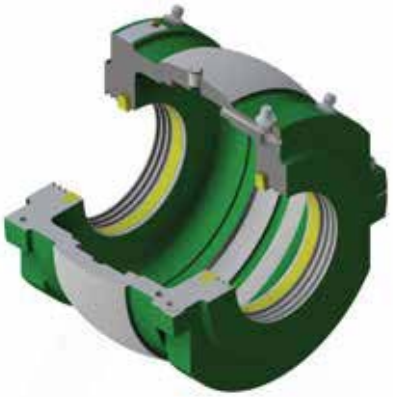

Fig. 28. Combination Seal.

TRIPLE LABYRINTH HOUSING AND SEAL REFERENCES

TABLE 22. LIGHT SERIES

Shaft (d)		Triple Labyrinth Seal Reference		Housing Reference
				Retained Expansion
mm	in.	**mm**	in.	
35 **40**	1 3/16 1 1/4 1 7/16 1 1/2	**35MMATL** **40MMATL**	103ATL 104ATL 107ATL 108ATL	LS1HRTL LS1HXTL
45 **50**	1 11/16 1 3/4 1 15/16 2	**45MMATL** **50MMATL**	111ATL 112ATL 115ATL 200ATL	LS2HRTL LS2HXTL
55 **60** **65**	2 3/16 2 1/4 2 7/16 2 1/2	**55MMATL** **60MMATL** **65MMATL**	203ATL 204ATL 207ATL 208ATL	LS3HRTL LS3HXTL
70 **75**	2 11/16 2 3/4 2 15/16 3	**70MMATL** **75MMATL**	211ATL 212ATL 215ATL 300ATL	LS4HRTL LS4HXTL
80 **85** **90**	3 3/16 3 1/4 3 7/16 3 1/2	**80MMATL** **85MMATL** **90MMATL**	303ATL 304ATL 307ATL 308ATL	LS5HRTL LS5HXTL
100 **105**	3 11/16 3 3/4 3 15/16 4	**100MMATL** **105MMATL**	311ATL 312ATL 315ATL 400ATL	LS6HRTL LS6HXTL
110 **115**	4 3/16 4 1/4 4 7/16 4 1/2	**110MMATL** **115MMATL**	403ATL 404ATL 407ATL 408ATL	LS7HRTL LS7HXTL
120 **125** **130**	4 11/16 4 3/4 4 15/16 5	**120MMATL** **125MMATL** **130MMATL**	411ATL 412ATL 415ATL 500ATL	LS8HRTL LS8HXTL
135 **140**	5 3/16 5 1/4 5 7/16 5 1/2	**135MMATL** **140MMATL**	503ATL 504ATL 507ATL 508ATL	LS9HRTL LS9HXTL
150 **155**	5 11/16 5 3/4 5 15/16 6	**150MMATL** **155MMATL**	511ATL 512ATL 515ATL 600ATL	LS10HRTL LS10HXTL
160A	6	**160MMATL**	–	LS10HRTLE0548 LS10HXTLE0548
160	6 7/16 6 1/2	**160MMATL**	607ATL 608ATL	LS11HRTL LS11HXTL
170 **175** **180**	6 11/16 6 3/4 6 15/16 7	**170MMATL** **175MMATL** **180MMATL**	611ATL 612ATL 615ATL 700ATL	LS12HRTL LS12HXTL
190 **200**	7 1/4 7 1/2 7 15/16 8	**190MMATL** **200MMATL**	704ATL 708ATL 715ATL 800ATL	LS13HRTL LS13HXTL
220 **230**	8 1/2 8 7/8 9	**220MMATL** **230MMATL**	808ATL 814ATL 900ATL	LS14HRTL LS14HXTL

Shaft (d)		Triple Labyrinth Seal Reference		Housing Reference
				Retained Expansion
mm	in.	**mm**	in.	
240 **250**	9 1/2 9 3/4 10	**240MMATL** **250MMATL**	908ATL 912ATL 1000ATL	LS15HRTL LS15HXTL
260 **270** **280**	10 1/2 10 3/4 11	**260MMATL** **270MMATL** **280MMATL**	1008ATL 1012ATL 1100ATL	LS16HRTL LS16HXTL
300 **305**	11 1/2 12	**300MMATL** **305MMATL**	1108ATL 1200ATL	LS17HRTL LS17HXTL
320 **330**	12 1/2 13	**320MMATL** **330MMATL**	1208ATL 1300ATL	LS18HRTL LS18HXTL
340 **350**	14	**340MMATL** **350MMATL**	1400ATL	LS19HRTL LS19HXTL
360 **380**	15	**360MMATL** **380MMATL**	1500ATL	LS20HRTL LS20HXTL
400	16	**400MMATL**	1600ATL	LS21HRTL LS21HXTL
420	17	**420MMATL**	1700ATL	LS22HRTL LS22HXTL
440 **460**	18	**440MMATL** **460MMATL**	1800ATL	LS23HRTL LS23HXTL
480	19	**480MMATL**	1900ATL	LS24HRTL LS24HXTL
500	20	**500MMATL**	2000ATL	LS25HRTL LS25HXTL
530	21	**530MMATL**	2100ATL	LS26HRTL LS26HXTL
560	22	**560MMATL**	2200ATL	LS27HRTL LS27HXTL
580	23	**580MMATL**	2300ATL	LS28HRTL LS28HXTL
600	24	**600MMATL**	2400ATL	LS29HRTL LS29HXTL

TABLE 23. MEDIUM SERIES

Shaft (d)		Triple Labyrinth Seal Reference		Housing Reference Retained Expansion
mm	in.	**mm**	in.	
–	–	–	–	–
45 **50**	1 11/16 1 3/4 1 15/16 2	**45MMATL** **50MMATL**	111ATL 112ATL 115ATL 200ATL	MS3HRTL MS3HXTL
55 **60** **65**	2 3/16 2 1/4 2 7/16 2 1/2	**55MMATL** **60MMATL** **65MMATL**	203ATL 204ATL 207ATL 208ATL	MS4HRTL MS4HXTL
70 **75**	2 11/16 2 3/4 2 15/16 3	**70MMATL** **75MMATL**	211ATL 212ATL 215ATL 300ATL	MS5HRTL MS5HXTL
80 **85** **90**	3 3/16 3 1/4 3 7/16 3 1/2	**80MMATL** **85MMATL** **90MMATL**	303ATL 304ATL 307ATL 308ATL	MS6HRTL MS6HXTL
100 **105**	3 11/16 3 3/4 3 15/16 4	**100MMATL** **105MMATL**	311ATL 312ATL 315ATL 400ATL	MS7HRTL MS7HXTL
110 **115**	4 3/16 4 1/4 4 7/16 4 1/2	**110MMATL** **115MMATL**	403ATL 404ATL 407ATL 408ATL	MS8HRTL MS8HXTL
120 **125** **130**	4 11/16 4 3/4 4 15/16 5	**120MMATL** **125MMATL** **130MMATL**	411ATL 412ATL 415ATL 500ATL	MS10HRTL MS10HXTL
135 **140**	5 3/16 5 1/4 5 7/16 5 1/2	**135MMATL** **140MMATL**	503ATL 504ATL 507ATL 508ATL	MS30HRTL MS30HXTL
150 **155**	5 11/16 5 3/4 5 15/16	**150MMATL** **155MMATL**	511ATL 512ATL 515ATL 600ATL	MS31HRTL MS31HXTL
160A	6	**160MMATL**	–	MS31HRTLE0548 MS31HXTLE0548
160 **170**	6 7/16 6 1/2 6 11/16 6 3/4	**160MMATL** **170MMATLE0547**	607ATL 608ATL 611ATLE0547 612ATLE0547	MS32HRTL MS32HXTL
175 **180**	6 15/16 7	**175MMATL** **180MMATL**	615ATL 700ATL	MS33HRTL MS33HXTL
190 **200**	7 1/4 7 1/2 7 15/16 8	**190MMATL** **200MMATL**	704ATL 708ATL 715ATL 800ATL	MS34HRTL MS34HXTL
220 **230**	8 1/2 8 7/8 9	**220MMATL** **230MMATL**	808ATL 814ATL 900ATL	MS35HRTL MS35HXTL

Shaft (d)		Triple Labyrinth Seal Reference		Housing Reference Retained Expansion
mm	in.	**mm**	in.	
240	9 1/2 9 3/4 10	**240MMATL**	908ATL 912ATL 1000ATL	MS36HRTL MS36HXTL
260 **270** **280**	10 1/2 10 3/4 11	**260MMATL** **270MMATL** **280MMATL**	1008ATL 1012ATL 1100ATL	MS36HRTLE0548 MS36HXTLE0548 MS37HRTL MS37HXTL
300 **305**	11 11/2 12	**300MMATL** **305MMATL**	1108ATL 1200ATL	MS38HRTL MS38HXTL
320 **330**	12 1/2 13	**320MMATL** **330MMATL**	1208ATL 1300ATL	MS39HRTL MS39HXTL
340 **360**	14	**340MMATL** **360MMATLE0547**	1400ATL	MS40HRTL MS40HXTL
380	15	**380MMATL**	1500ATL	MS41HRTL MS41HXTL
400	16	**400MMATL**	1600ATL	MS42HRTL MS42HXTL
420	17	**420MMATL**	1700ATL	MS43HRTL MS43HXTL
440 **460**	18	**440MMATL** **460MMATL**	1800ATL	MS44HRTL MS44HXTL
480	19	**480MMATL**	1900ATL	MS45HRTL MS45HXTL
500	20	**500MMATL**	2000ATL	MS46HRTL MS46HXTL
530	21	**530MMATL**	2100ATL	MS47HRTL MS47HXTL
560	22	**560MMATL**	2200ATL	MS48HRTL MS48HXTL
580	23	**580MMATL**	2300ATL	MS49HRTL MS49HXTL
600	24	**600MMATL**	2400ATL	MS50HRTL MS50HXTL

TRIPLE LABYRINTH HOUSING AND SEAL REFERENCES

TABLE 24. HEAVY SERIES

Shaft (d)		Triple Labyrinth Seal Reference		Housing Reference
				Retained Expansion
mm	in.	**mm**	in.	
–	–	–	–	–
–	–	–	–	–
–	–	–	–	–
–	–	–	–	–
–	–	–	–	–
100 **105**	3 11/16 3 3/4 3 15/16 4	**100MMATL** **105MMATL**	311ATL 312ATL 315ATL 400ATL	HS54HRTL HS54HXTL
110 **115** **120**	4 3/16 4 1/4 4 7/16 4 1/2	**110MMATL** **115MMATL** **120MMATLE0547**	403ATL 404ATL 407ATL 408ATL	HS55HRTL HS55HXTL
125 **130**	4 11/16 4 3/4 4 15/16 5	**125MMATL** **130MMATL**	411ATL 412ATL 415ATL 500ATL	HS56HRTL HS56HXTL
135 **140**	5 3/16 5 1/4 5 7/16 5 1/2	**135MMATL** **140MMATL**	503ATL 504ATL 507ATL 508ATL	HS57HRTL HS57HXTL
150 **155**	5 11/16 5 3/4 5 15/16 6	**150MMATL** **155MMATL**	511ATL 512ATL 515ATL 600ATL	HS58HRTL HS58HXTL
160A	6	**160MMATL**	–	HS58HRTLE0548 HS58HXTLE0548
160 **170**	6 7/16 6 1/2 6 11/16 6 3/4	**160MMATL** **170MMATLE0547**	607ATL 608ATL 611ATLE0547 612ATLE0547	HS59HRTL HS59HXTL
175 **180**	6 15/16 7	**175MMATL** **180MMATL**	615ATL 700ATL	HS60HRTL HS60HXTL
190 **200**	7 1/4 7 1/2 7 15/16 8	**190MMATL** **200MMATL**	704ATL 708ATL 715ATL 800ATL	HS61HRTL HS61HXTL
220 **230**	8 1/2 8 7/8 9	**220MMATL** **230MMATL**	808ATL 814ATL 900ATL	HS62HRTL HS62HXTL

Shaft (d)		Triple Labyrinth Seal Reference		Housing Reference
				Retained Expansion
mm	in.	**mm**	in.	
240	9 1/2 9 3/4 10	**240MMATL**	908ATL 912ATL 1000ATL	HS63HRTL HS63HXTL
260	–	**260MMATL**	–	HS63HRTLE0548 HS63HXTLE0548
270 **280**	10 1/2 10 3/4 11	**270MMATL** **280MMATL**	1008ATL 1012ATL 1100ATL	HS83HRTL HS83HXTL
300 **305**	11 1/2 12	**300MMATL** **305MMATL**	1108ATL 1200ATL	HS65HRTL HS65HXTL
320	13	**320MMATL**	1300ATL	HS66HRTL HS66HXTL
340 **360**	14	**340MMATL** **360MMATLE0547**	1400ATL	HS86HRTL HS86HXTL
380	15	**380MMATL**	1500ATL	HS68HRTL HS68HXTL
400	–	**400MMATL**	–	HS68HRTLE0548 HS68HXTLE0548
420 **440**	17	**420MMATL** **440MMATLE0547**	1700ATL	HS89HRTL HS89HXTL
460	18	**460MMATL**	1800ATL	HS90HRTL HS90HXTL
500	20	**500MMATL**	2000ATL	HS94HRTL HS94HXTL
530	–	**530MMATL**	–	HS94HRTLE0548 HS94HXTLE0548
560	22	**560MMATL**	2200ATL	HS94HRTLE0548 HS94HXTLE0548
580 **600**	23	**580MMATL** **600MMATLE0547**	2300ATL	HS95HRTL HS95HXTL
–	–	–	–	–

BEARING LUBRICATION

The function of a lubricant in a rolling element bearing is to prevent metal-to-metal contact between components, prevent wear and protect against corrosion. Two methods of lubrication are normal grease and oil. In the case of Timken split bearings, grease lubrication is most often employed.

GREASE LUBRICATION

Greases can be used to lubricate Timken split cylindrical roller bearings under most normal conditions. Grease is the preferred method of lubrication because it can be more easily retained within the bearing enclosure and housing, the latter simplifying sealing arrangements. Greases are a semi-solid lubricant generally consisting of a soap emulsified with mineral or synthetic oils. Other ingredients include rust inhibitors or extra pressure additives. The oils employed may be mineral or synthetic depending upon the application.

Timken bearings are heat treated to retain dimensional stability up to 140° C (284° F). At temperatures up to 100° C (212° F), standard high-quality greases may be used. We suggest good quality lithium soap or complex-based greases having extra pressure additives and a penetration number of 3. It is important to note that all values given in this catalog for axial capacity assume the use of grease with extra pressure (EP) additives. If EP additives are not present then axial capacity is reduced by 50 percent.

At temperatures exceeding 100° C (212° F) care must be taken to ensure that the correct thickener and viscosity of base oil are selected. The performance of grease at such temperatures is dependent on a stable thickener and the temperature/viscosity ratio of the base oil. A stable base oil and soap thickener are important, as is the ability of the oil to offer adequate viscosity at an elevated temperature.

In cases of water splash, calcium soap based greases may be used. These are particularly resistant to water wash out.

Care should be taken when mixing greases with different soap thickeners and base oil types. Please contact a Timken engineer for further advice.

For initial lubrication the bearing should always be well filled with grease. The remaining housing space should be filled as follows:

- At low speeds, not exceeding 25 percent of catalog speed rating, we suggest that the remaining housing space be fully filled with grease.
- At medium speeds, between 25 and 50 percent of catalog speed rating, the remaining housing space may be ⅓ to ½ filled with grease.
- At high speeds, exceeding 50 percent of catalog speed rating, the remaining housing space should be left empty.

RE-LUBRICATION

The re-lubrication intervals will be dependent on the prevailing operating conditions.

Greases age and oxidize due to a number of considerations. These include load, speed, temperature, cleanliness, presence of water and even airflow through the bearing.

For retained-type bearings, initial re-lubrication intervals for guidance purposes would be 2-4 weeks with 0.1-0.2 ounces (3-6 mls) added. For expansion type bearings, initial re-lubrication intervals would be 3-4 months with 0.1-0.2 ounces (3-6 mls) added. More accurate intervals and quantities should be established from observations taken during bearing operation. If re-lubrication can be carried out while the bearing is in operation, this will allow for even distribution of the grease. This means of re-lubrication should only be undertaken if it is safe to do so.

OIL LUBRICATION

Timken split cylindrical roller bearings are rarely lubricated with oil. In cases where oil is selected as a means of lubrication, then special consideration must be given to the bearing housing design and sealing.

There are three principal methods of oil lubrication:

OIL SUMP

The oil sits in the bearing housing at a level approximately halfway up the bottom dead center rolling element. Oil circulation around the bearing is then provided via the bearing rotation agitating the oil sump. It is very important to provide a sufficiently dimensioned oil sump as too small a volume will result in increased frequency of oil change and elevated operating temperatures.

OIL MIST

An oil/air mist is injected into the bearing via nozzles, normally a total oil loss system; this provides extremely high speed capability at high cost.

For further advice on oil selection and oil lubrication systems please consult a Timken engineer.

OIL CIRCULATION

Oil is circulated into the bearing housing assembly from an external oil sump. This allows the oil to be cooled and filtered, additionally an external oil sump normally allows for a higher volume of oil. While being a more optimum solution, specialist housing designs must be provided. There are also cost and space considerations with such systems.

ASSEMBLY AND MAINTENANCE

SHAFT CHECK

When fitting bearings on both new and existing installations, the shaft need only be raised 1⁄16 to 1⁄4 inch. This should provide sufficient clearance to allow for easy fitting. Prior to the assembly of any bearing components the shaft must be checked for size, roundness and parallelism.

- Check a minimum of three positions along the journal length.
- Check a minimum of three positions around the shaft to establish roundness
- Shaft tolerances and shaft surface finish are given in the table on page 28.

FITTING THE INNER RING

- Carefully unpack and clean the bearing removing all preservatives.
- Inner race locating clamping rings cannot be removed before the cage has been dismantled.
- Care must be taken that no damage occurs when cage halves are separated.

NOTE

Spring clips should always be retained on one cage half.

- Clean the shaft and lightly oil the bore of the inner race.

- Place the two inner race halves in approximately the correct position with the joints at the top and bottom. With the joints in that position it will allow easy access to the clamp ring screws later when they are tightened
- Ensure that the match marks (black band) in the clamp ring groove on one side of the race coincide.

There should be an equal gap at each joint. If there are no gaps do not proceed and contact a Timken engineer.

- Fit the inner race locating clamping rings. Ensure that the correct clamp ring is fitted in the corresponding groove. To assist in this the clamping rings are intentionally manufactured to different widths on the more popular sizes. In addition, the match-marking groove found on the inner race is repeated on the corresponding clamping ring.

- Make sure that the thrust faces are not damaged when the rings enter the grooves.
- The joints should be at 90 degrees to the inner race joints and the screws should be tightened in such a way that there are four equal gaps.
- Screws should only be finger tight so that the race can be adjusted axially into its final position.

ASSEMBLY OF THE OUTER RACE INTO THE SEATING GROOVE IN THE HOUSING

- The housing must be cleaned thoroughly removing all preservatives. If reusing an existing housing it is essential that the outer race seating groove is clean and free of any hardened grease deposits or corrosion.
- Lightly oil the seating groove and the outside diameter of the outer race halves.
- Place the race halves of the expansion or retained type into the seating groove and ensure that:
    - The match marking numbers on the edge of each race half coincide.
    - The lubrication hole in the outer race is in the upper housing half.
    - The outer race joints should protrude equally above the housing joint faces.

If a retained bearing is being fitted:

- Pre-assemble the housing halves and fully tighten the joint socket head cap screws.
- Ensure that the joints are closed.
- Fit the pins and screws provided and tighten up evenly to ensure that the outer race is fixed square against the opposite shoulder of the seating groove.

Larger bearings (both retained and expansion) may require outer race retaining screws. If these are required, please ensure that the flat washers are not omitted. Once fitted, ensure that the end of the screw does not protrude above the race track surface.

- Separate the housing halves. These are now ready for final assembly.
- Fit the appropriate seals. The seal grooves in the standard housing are suitable for felt and synthetic rubber. If the bearing is inspected or replaced on an existing installation and the housing is re-used, we advise fitting new seals.

PRE-FITTING THE LOWER HOUSING HALF

On existing installations it is often unnecessary to change the support if a bearing, or bearing and housing, has to be replaced. In such cases the support base bolts should not be touched to ensure that the replacement bearing and the old or new housing will be in the same position as previously. In new installations the support base should be positioned with the bolts finger tight. This will allow additional freedom of movement when aligning the inner and outer races.

RETAINED BEARING

- Slide the pre-assembled bottom half into the support base.
- Line up the inner and outer race roller track by adjusting the inner ring sideways into the final position. The final position should be confirmed by passing one half of the cage and roller assembly between the inner and outer races. The cage half should pass freely round the lower half of the bearing without becoming jammed or trapped.
- Remove the bottom housing half and tighten the clamp ring socket head cap screws and fit the cage as explained below.

EXPANSION BEARING

- As in the case of the retained bearing, slide in the pre-assembled bottom housing half.
- Line up the inner ring by adjusting it sideways until it is central with the outer race.
- The clearance between the inner race end faces and inside housing walls should be equal. If cage and rollers are assembled in this position the shaft can expand either side of the centre line by the amount shown in column 2 in table 25.
- When the position of the inner ring is satisfactory, remove the bottom half housing and tighten the clamp ring socket head cap screws and fit the cage as explained below.

A greater degree of expansion allowance can be obtained, but only in one direction. This is achieved by offsetting the inner race with respect to the housing. In this case the total amount of linear movement in service is given in column 3 of table 25.

TABLE 25. EXPANSION BEARING – ALLOWABLE LIMITS

Group	Maximum Expansion if Cage and Rollers are Assembled Central	Maximum Expansion
mm in.	**mm** in.	**mm** in.
40 1 ½	**3.0** ⅛	**6** ¼
50 2	**3.0** ⅛	**6** ¼
60 2 ½	**3.5** 9⁄64	**7** 9⁄32
70 3	**4.0** 5⁄32	**8** 5⁄16
80 3 ½	**6.0** ¼	**12** ½
100 4	**5.5** 7⁄32	**11** 7⁄16
110 4 ½	**5.5** 7⁄32	**11** 7⁄16
120 5	**5.5** 7⁄32	**11** 7⁄16
140 5 ½	**8.0** 5⁄16	**16** ⅝
150 6	**8.0** 5⁄16	**16** ⅝

TIGHTENING OF THE LOCATING CLAMPING RING SCREWS

- When the inner race is in its final position, tighten all four clamping ring screws equally.
- Use the correct hexagon key and a torque wrench.
- Tap down the locating thrust rings with a nylon mallet to ensure that they are seating down correctly within the grooves.

- Re-tighten and repeat the tapping down until the screws are fully tight.
- Torque values for the various screw sizes are given in the tables at the end of this section. If a screw is lost it must be replaced using a high tensile socket head cap screw grade, 12.9.

FITTING THE CAGE

- Grease the inner race roller track and cage.
- Place the cage halves around the inner race ensuring that the match mark numbers on the edge of each cage half are the same and coincide at one joint.
- Press the cage halves into the clip ensuring that the roll pins are fully located.
- Check that the cage assembly runs freely on the inner race.
- Fully pack the cage and roller assembly with the correct type of grease.

FINAL FITTING OF THE HOUSING

- Charge the bottom and upper housing halves with the correct amount of grease. Refer to page 35 for correct types and quantities of grease depending on the application and the speed.
- Lightly oil the spherical diameter of both housing and support and slide the bottom housing half into the support base.
- Lower the shaft with the assembled inner races and cages, until the rollers touch the tracks in the bottom half housing. Make sure that when the rollers in the retained bearing enter the outer race groove they do not damage the lips.

- Turning the shaft by hand, the rollers should move freely between the thrust shoulders of the inner race and the lips of the retained outer race.
- Fit the upper housing half then tighten the housing joint screws. Torque values for housing screws are given in the tables on pages 40-42. Check that there is no gap at the joints.

FITTING THE SUPPORT CAP

- Place the support cap over the upper housing half and engage the locating dowels at the joint.

- Using a nylon mallet, gently tap the support cap down to close the gap at the joints.
- Fit the bolts and tighten just enough to hold the support joints closed.
- At this point, and only if it is safe to do so, the shaft should be run at low speed and if possible, with low loading. This will allow the spherical locating surfaces to correctly align. If running the shaft under power is not an option, the shaft should be rotated by hand to achieve this goal.
- Tighten the cap bolts fully using a torque wrench. At this point the support base bolts should also be checked and tightened as required. Torque values for support screws are given in the tables on pages 40-42.

SCREW SIZES, KEY SIZES AND TORQUE VALUES
LIGHT SERIES

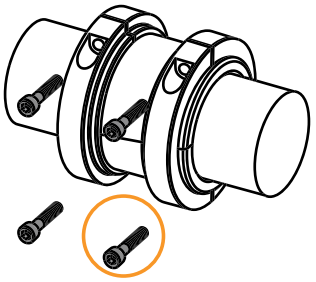

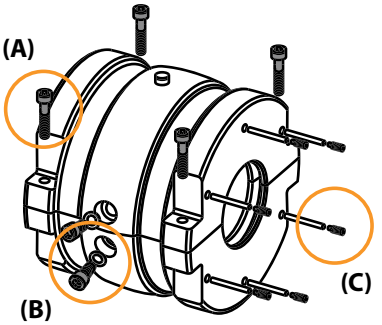

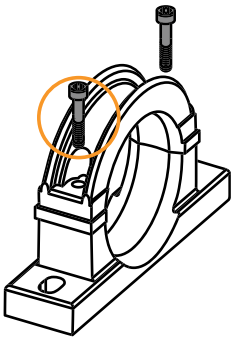

TABLE 26. LIGHT SERIES

Shaft (d)		Clamping Ring[1]			Housing									Support		
					Joint (A)			Radial Retainer (B)			(HR only) (C)					
		Screw	Key	Torque	Screw	Key	Torque	Screw	Key	Torque	Screw	Key	Torque	Screw	Key	Torque
mm	in.			**Nm** (lb.ft)			**Nm** (lb.ft)			**Nm** (lb.ft)			**Nm** (lb.ft)			**Nm** (lb.ft)
35 - 40	1 3/16 - 1 1/2	M4	3	**4** (2.6)	M4	3	**4** (2.6)	–	–	–	M4	3	**4** (2.6)	M8	6	**27** (20)
45 - 50	1 11/16 - 2	M4	3	**4** (2.6)	M4	3	**4** (2.6)	–	–	–	M4	3	**4** (2.6)	M8	6	**27** (20)
60 - 65	2 3/16 - 2 1/2	M4	3	**4** (2.6)	M4	3	**4** (2.6))	–	–	–	M4	3	**4** (2.6))	M10	8	**54** (40)
70 - 75	2 11/16 - 3	M4	3	**4** (2.6)	M4	3	**4** (2.6)	–	–	–	M4	3	**4** (2.6)	M12	10	**94** (69)
80 - 90	3 3/16 - 3 1/2	M5	4	**7** (5)	M5	4	**7** (5)	–	–	–	M4	3	**4** (2.6)	M16	14	**231** (170)
100 - 105	3 11/16 - 4	M6	3	**11** (8)	M6	3	**11** (8)	–	–	–	M4	3	**4** (2.6)	M16	14	**231** (170)
110 - 115	4 3/16 - 4 1/2	M6	3	**11** (8)	M6	3	**11** (8)	–	–	–	M6	3	**11** (8)	M20	17	**434** (320)
120 - 130	4 11/16 - 5	M6	3	**11** (8)	M6	3	**11** (8)	–	–	–	M6	3	**11** (8)	M20	17	**434** (320)
135 - 140	5 3/16 - 5 1/2	M8	6	**27** (20)	M8	6	**27** (20)	–	–	–	M6	3	**11** (8)	M20	17	**434** (320)
150 - 155	5 11/16 - 6	M8	6	**27** (20)	M8	6	**27** (20)	–	–	–	M6	3	**11** (8)	M20	17	**434** (320)
160	6 7/16 - 6 1/2	M8	6	**27** (20)	M8	6	**27** (20)	–	–	–	M6	3	**11** (8)	M16	14	**231** (170)
170 - 180	6 11/16 - 7	M8	6	**27** (20)	M8	6	**27** (20)	–	–	–	M6	3	**11** (8)	M16	14	**231** (170)
190 - 200	7 1/4 - 8	M8	6	**27** (20)	M8	6	**27** (20)	M10	8	**54** (40)	M6	3	**11** (8)	M16	14	**231** (170)
220 - 230	8 1/2 - 9	M10	8	**54** (40)	M10	8	**54** (40)	M10	8	**54** (40)	M6	3	**11** (8)	M16	14	**231** (170)
240 - 250	9 1/2 - 10	M10	8	**54** (40)	M10	8	**54** (40)	M10	8	**54** (40)	M6	3	**11** (8)	M20	17	**434** (320)
260 - 280	10 1/2 - 11	M10	8	**54** (40)	M10	8	**54** (40)	M10	8	**54** (40)	M10	8	**54** (40)	M20	17	**434** (320)
300	11 1/2 - 12	M10	8	**54** (40)	M10	8	**54** (40)	M10	8	**54** (40)	M10	8	**54** (40)	M20	17	**434** (320)
320 - 330	12 1/2 - 13	M12	10	**94** (69)	M12	10	**94** (69)	M10	8	**54** (40)	M10	8	**54** (40)	M20	17	**434** (320)
340 - 350	14	M12	10	**94** (69)	M12	10	**94** (69)	M10	8	**54** (40)	M10	8	**54** (40)	M20	17	**434** (320)
360 - 380	15	M12	10	**94** (69)	M12	10	**94** (69)	M10	8	**54** (40)	M10	8	**54** (40)	M20	17	**434** (320)
400	16	M12	10	**94** (69)	M12	10	**94** (69)	M10	8	**54** (40)	M10	8	**54** (40)	M20	17	**434** (320)
420	17	M12	10	**94** (69)	M12	10	**94** (69)	M12	10	**94** (69)	M10	8	**54** (40)	M20	17	**434** (320)
440 - 460	18	M12	10	**94** (69)	M12	10	**94** (69)	M12	10	**94** (69)	M10	8	**54** (40)	M20	17	**434** (320)
480	19	M12	10	**94** (69)	M12	10	**94** (69)	M12	10	**94** (69)	M10	8	**54** (40)	M20	17	**434** (320)
500	20	M16	14	**231** (170)	M16	14	**231** (170)	M12	10	**94** (69)	M10	8	**54** (40)	M20	17	**434** (320)
530	21	M16	14	**231** (170)	M16	14	**231** (170)	M12	10	**94** (69)	M10	8	**54** (40)	M20	17	**434** (320)
560	22	M16	14	**231** (170)	M16	14	**231** (170)	M12	10	**94** (69)	M10	8	**54** (40)	M20	17	**434** (320)
580	23	M16	14	**231** (170)	M16	14	**231** (170)	M12	10	**94** (69)	M10	8	**54** (40)	M20	17	**434** (320)
600	24	M16	14	**231** (170)	M16	14	**231** (170)	M12	10	**94** (69)	M10	8	**54** (40)	M20	17	**434** (320)

[1] May be increased by up to 20 percent for high axial load applications.

MEDIUM SERIES

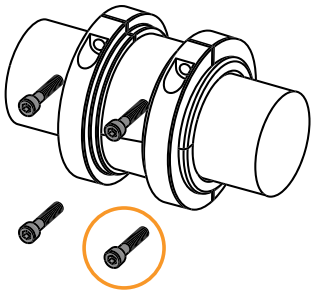

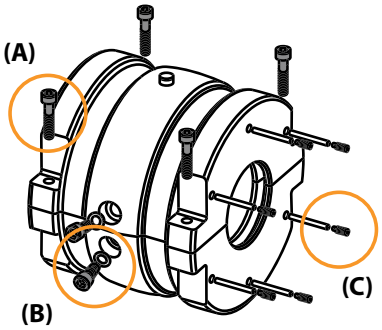

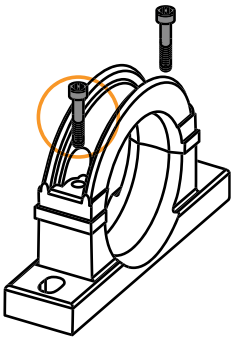

TABLE 27. MEDIUM SERIES

Shaft (d)		Clamping Ring[1]			Housing									Support		
					Joint (A)			Radial Retainer (B)			(HR only) (C)					
		Screw	Key	Torque	Screw	Key	Torque	Screw	Key	Torque	Screw	Key	Torque	Screw	Key	Torque
mm	in.			**Nm** (lb.ft)			**Nm** (lb.ft)			**Nm** (lb.ft)			**Nm** (lb.ft)			**Nm** (lb.ft)
45 - 50	1 11⁄16 - 2	M5	4	**7** (5)	M5	4	**7** (5)	–	–	–	M4	3	**4** (2.6)	M110	8	**54** (40)
60 - 65	2 3⁄16 - 2 1⁄2	M5	4	**7** (5)	M5	4	**7** (5)	–	–	–	M4	3	**4** (2.6)	M12	10	**94** (69)
70 - 75	2 11⁄16 - 3	M6	3	**11** (8)	M6	3	**11** (8)	–	–	–	M4	3	**4** (2.6)	M16	14	**231** (170)
80 - 90	3 3⁄16 - 3 1⁄2	M6	3	**11** (8)	M6	3	**11** (8)	–	–	–	M4	3	**4** (2.6)	M16	14	**231** (170)
100 - 105	3 11⁄16 - 4	M6	3	**11** (8)	M6	3	**11** (8)	–	–	–	M4	3	**4** (2.6)	M20	17	**434** (320)
110 - 115	4 3⁄16 - 4 1⁄2	M8	6	**27** (20)	M8	6	**27** (20)	–	–	–	M6	3	**11** (8)	M20	17	**434** (320)
120 - 130	4 11⁄16 - 5	M8	6	**27** (20)	M8	6	**27** (20)	–	–	–	M6	3	**11** (8)	M20	17	**434** (320)
135 - 140	5 3⁄16 - 5 1⁄2	M8	6	**27** (20)	M8	6	**27** (20)	–	–	–	M6	3	**11** (8)	M20	17	**434** (320)
150 - 155	5 11⁄16 - 6	M8	6	**27** (20)	M8	6	**27** (20)	–	–	–	M6	3	**11** (8)	M20	17	**434** (320)
160 - 170	6 7⁄16 - 6 1⁄2	M10	8	**54** (40)	M10	8	**54** (40)	–	–	–	M6	3	**11** (8)	M20	17	**434** (320)
180	6 11⁄16 - 7	M10	8	**54** (40)	M10	8	**54** (40)	M10	8	**54** (40)	M6	3	**11** (8)	M20	17	**434** (320)
190 - 200	7 1⁄4 - 8	M12	10	**94** (69)	M12	10	**94** (69)	M10	8	**54** (40)	M6	3	**11** (8)	M20	17	**434** (320)
220 - 230	8 1⁄2 - 9	M12	10	**94** (69)	M12	10	**94** (69)	M10	8	**54** (40)	M6	3	**11** (8)	M20	17	**434** (320)
240 - 260	9 1⁄2 - 10	M12	10	**94** (69)	M12	10	**94** (69)	M10	8	**54** (40)	M10	8	**54** (40)	M20	17	**434** (320)
280	10 1⁄2 - 11	M16	14	**231** (170)	M16	14	**231** (170)	M10	8	**54** (40)	M10	8	**54** (40)	M20	17	**434** (320)
300	11 1⁄2 - 12	M16	14	**231** (170)	M16	14	**231** (170)	M10	8	**54** (40)	M10	8	**54** (40)	M20	17	**434** (320)
320 - 330	12 1⁄2 - 13	M16	14	**231** (170)	M16	14	**231** (170)	M10	8	**54** (40)	M10	8	**54** (40)	M20	17	**434** (320)
340 - 360	14	M16	14	**231** (170)	M16	14	**231** (170)	M12	10	**94** (69)	M10	8	**54** (40)	M20	17	**434** (320)
380	15	M16	14	**231** (170)	M16	14	**231** (170)	M12	10	**94** (69)	M10	8	**54** (40)	M20	17	**434** (320)
400	16	M16	14	**231** (170)	M16	14	**231** (170)	M12	10	**94** (69)	M10	8	**54** (40)	M20	17	**434** (320)
420	17	M16	14	**231** (170)	M16	14	**231** (170)	M12	10	**94** (69)	M10	8	**54** (40)	M20	17	**434** (320)
440 - 460	18	M16	14	**231** (170)	M16	14	**231** (170)	M12	10	**94** (69)	M10	8	**54** (40)	M20	17	**434** (320)
480	19	M20	17	**434** (320)	M20	17	**434** (320)	M12	10	**94** (69)	M10	8	**54** (40)	M24	19	**760** (560)
500	20	M20	17	**434** (320)	M20	17	**434** (320)	M12	10	**94** (69)	M10	8	**54** (40)	M24	19	**760** (560)
530	21	M20	17	**434** (320)	M20	17	**434** (320)	M12	10	**94** (69)	M10	8	**54** (40)	M24	19	**760** (560)
560	22	M20	17	**434** (320)	M20	17	**434** (320)	M12	10	**94** (69)	M10	8	**54** (40)	M24	19	**760** (560)
580	23	M20	17	**434** (320)	M20	17	**434** (320)	M12	10	**94** (69)	M10	8	**54** (40)	M24	19	**760** (560)
600	24	M20	17	**434** (320)	M20	17	**434** (320)	M12	10	**94** (69)	M10	8	**54** (40)	M24	19	**760** (560)

[1] May be increased by up to 20 percent for high axial load applications.

SCREW SIZES, KEY SIZES AND TORQUE VALUES - CONT'D
HEAVY SERIES

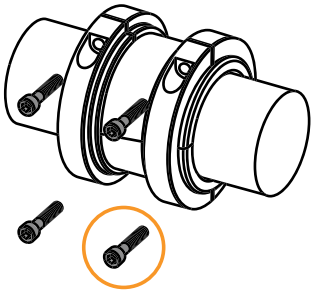

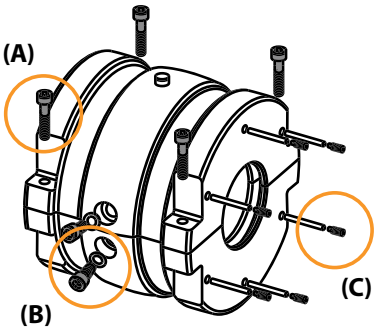

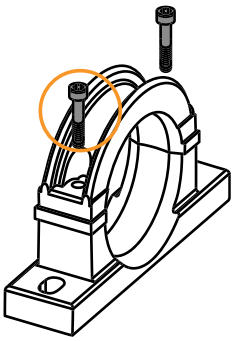

TABLE 28. HEAVY SERIES

Shaft (d)		Clamping Ring[1]			Housing									Support		
					Joint (A)			Radial Retainer (B)			(HR only) (C)					
		Screw	Key	Torque	Screw	Key	Torque	Screw	Key	Torque	Screw	Key	Torque	Screw	Key	Torque
mm	in.			**Nm** (lb.ft)			**Nm** (lb.ft)			**Nm** (lb.ft)			**Nm** (lb.ft)			**Nm** (lb.ft)
100 - 105	3 11/16 - 4	M10	8	**54** (40)	M10	8	**54** (40)	M10	8	**54** (40)	M6	3	**11** (8)	M16	14	**231** (170)
110 - 120	4 3/16 - 4 1/2	M10	8	**54** (40)	M10	8	**54** (40)	M10	8	**54** (40)	M6	3	**11** (8)	M16	14	**231** (170)
125 - 130	4 15/16 - 5	M10	8	**54** (40)	M10	8	**54** (40)	M10	8	**54** (40)	M10	8	**54** (40)	M16	14	**231** (170)
135 - 140	5 3/16 - 5 1/2	M10	8	**54** (40)	M10	8	**54** (40)	M10	8	**54** (40)	M10	8	**54** (40)	M20	17	**434** (320)
150 - 155	5 11/16 - 6	M10	8	**54** (40)	M10	8	**54** (40)	M10	8	**54** (40)	M10	8	**54** (40)	M20	17	**434** (320)
160 - 170	6 7/16 - 6 11/16	M12	10	**94** (69)	M12	10	**94** (69)	M12	10	**94** (69)	M10	8	**54** (40)	M20	17	**434** (320)
180	6 3/4 - 7	M12	10	**94** (69)	M12	10	**94** (69)	M12	10	**94** (69)	M10	8	**54** (40)	M20	17	**434** (320)
190 - 200	7 1/4 - 8	M12	10	**94** (69)	M12	10	**94** (69)	M12	10	**94** (69)	M10	8	**54** (40)	M20	17	**434** (320)
220 - 230	8 1/2 - 9	M16	14	**231** (170)	M16	14	**231** (170)	M12	10	**94** (69)	M10	8	**54** (40)	M20	17	**434** (320)
240 - 260	9 1/2 - 10	M16	14	**231** (170)	M16	14	**231** (170)	M12	10	**94** (69)	M10	8	**54** (40)	M20	17	**434** (320)
280	11	M20	17	**434** (320)	M20	17	**434** (320)	M12	10	**94** (69)	M10	8	**54** (40)	M20	17	**434** (320)
300	12	M20	17	**434** (320)	M20	17	**434** (320)	M12	10	**94** (69)	M10	8	**54** (40)	M20	17	**434** (320)
320 - 330	13	M20	17	**434** (320)	M20	17	**434** (320)	M12	10	**94** (69)	M10	8	**54** (40)	M24	19	**760** (560)
340 - 360	14	M24	19	**760** (560)	M20	17	**434** (320)	M12	10	**94** (69)	M10	8	**54** (40)	M24	19	**760** (560)
380 - 400	15 - 16	M24	19	**760** (560)	M20	17	**434** (320)	M12	10	**94** (69)	M10	8	**54** (40)	M24	19	**760** (560)
420 - 440	17	M24	19	**760** (560)	M20	17	**434** (320)	M12	10	**94** (69)	M16	14	**231** (170)	M24	19	**760** (560)
460	18	M24	19	**760** (560)	M20	17	**434** (320)	M12	10	**94** (69)	M16	14	**231** (170)	M24	19	**760** (560)
480	19	M24	19	**760** (560)	M20	17	**434** (320)	M12	10	**94** (69)	M16	14	**231** (170)	M24	19	**760** (560)
500	20	M24	19	**760** (560)	M20	17	**434** (320)	M16	14	**231** (170)	M10	8	**54** (40)	M24	19	**760** (560)
530	21	M24	19	**760** (560)	M20	17	**434** (320)	M16	14	**231** (170)	M10	8	**54** (40)	M24	19	**760** (560)
560	22	M24	19	**760** (560)	M20	17	**434** (320)	M12	10	**94** (69)	M10	8	**54** (40)	M24	19	**760** (560)
580	23	M24	19	**760** (560)	M20	17	**434** (320)	M12	10	**94** (69)	M10	8	**54** (40)	M24	19	**760** (560)
600	24	M24	19	**760** (560)	M20	17	**434** (320)	M12	10	**94** (69)	M10	8	**54** (40)	M24	19	**760** (560)

[1] May be increased by up to 20 percent for high axial load applications.

SHIPPING WEIGHTS

TABLE 29. LIGHT SERIES

		Bearing	Housing	Support	Comp. Unit
mm	in.	**Kg** lb.	**Kg** lb.	**Kg** lb.	**Kg** lb.
35 **40**	1 3/16 1 1/2	**1.3** 3	**2.5** 6	**3** 7	**6.8** 16
45 **50**	1 11/16 2	**1.8** 4	**3.5** 8	**5** 11	**10.3** 23
60 **65**	2 3/16 2 1/2	**2.3** 5	**4.4** 10	**5.9** 13	**12.6** 28
70 **75**	2 11/16 3	**3.3** 7	**6.5** 14	**9.5** 21	**19.3** 42
80 **90**	3 3/16 3 1/2	**5** 11	**9** 20	**15** 33	**29** 64
100 **105**	3 11/16 4	**7** 15	**11** 24	**16** 35	**34** 74
110 **115**	4 3/16 4 1/2	**10.5** 23	**16** 35	**24** 53	**50.5** 111
120 **130**	4 11/16 5	**14** 31	**24** 53	**41** 90	**79** 174
135 **140**	5 3/16 5 1/2	**17** 37	**27** 59	**49** 108	**93** 204
150 **155**	5 11/16 6	**18** 40	**31** 68	**49** 108	**98** 216
160	6 7/16 6 1/2	**19** 42	**35** 77	**65** 143	**119** 262
170 **180**	6 11/16 7	**23** 51	**36** 79	**73** 161	**132** 291
190 **200**	7 1/4 8	**26** 57	**45** 99	**92** 202	**163** 358
220 **230**	8 1/2 9	**33** 73	**48** 106	**117** 257	**198** 436
240 **250**	9 1/2 10	**42** 92	**60** 132	**147** 323	**249** 547
260 **280**	10 1/2 11	**53** 117	**73** 161	**171** 376	**297** 654
300 **305**	11 1/2 12	**60** 132	**89** 196	**199** 438	**348** 766
320 **330**	12 1/2 13	**72** 158	**109** 240	**214** 471	**395** 869
340 **350**	14	**79** 174	**121** 266	**241** 530	**441** 970
360 **380**	15	**90** 198	**130** 286	**294** 647	**514** 1131
400	16	**96** 211	**145** 319	**315** 693	**556** 1223
420	17	**105** 231	**155** 341	**323** 711	**583** 1283
440 **460**	18	**119** 262	**156** 343	**377** 829	**652** 1434
480	19	**123** 271	**167** 367	**467** 1027	**757** 1665
500	20	**139** 306	**198** 436	**449** 988	**786** 1730
530	21	**180** 396	**220** 484	**502** 1104	**902** 1984
560	22	**185** 407	**258** 568	**578** 1272	**1021** 2247
580	23	**190** 418	**280** 616	**690** 1518	**1160** 2552
600	24	**240** 528	**296** 651	**730** 1606	**1266** 2785

TABLE 30. MEDIUM SERIES

		Bearing	Housing	Support	Comp. Unit
mm	in.	**Kg** lb.	**Kg** lb.	**Kg** lb.	**Kg** lb.
–	–	–	–	–	–
45 **50**	1 11/16 2	**2.5** 6	**5** 11	**5.9** 13	**13.4** 30
60 **65**	2 3/16 2 1/2	**3.7** 8	**8** 18	**9.5** 21	**21.2** 47
70 **75**	2 11/16 3	**5.6** 12	**10** 22	**15** 33	**30.6** 67
80 **90**	3 3/16 3 1/2	**7** 15	**12** 26	**16** 35	**35** 76
100 **105**	3 11/16 4	**11** 24	**13** 29	**24** 53	**48** 106
110 **115**	4 3/16 4 1/2	**15.5** 34	**20** 44	**41** 90	**76.5** 168
120 **130**	4 11/16 5	**21** 46	**28** 62	**49** 108	**98** 216
135 **140**	5 3/16 5 1/2	**25** 55	**36** 79	**72** 158	**133** 292
150 **155**	5 11/16 6	**31** 68	**42** 92	**80** 176	**153** 336
160 **170**	6 7/16 6 1/2	**40** 88	**58** 128	**118** 260	**216** 476
180	6 11/16 7	**47** 103	**68** 150	**138** 304	**253** 557
190 **200**	7 1/4 8	**59** 130	**86** 189	**192** 422	**337** 741
220 **230**	8 1/2 9	**69** 152	**101** 222	**229** 504	**399** 878
240 **260**	9 1/2 10	**79** 174	**108** 238	**277** 609	**464** 1021
270 **280**	10 1/2 11	**87** 191	**134** 295	**320** 704	**541** 1190
300 **305**	11 1/2 12	**125** 275	**132** 290	**372** 818	**629** 1383
320 **330**	12 1/2 13	**150** 330	**176** 387	**385** 847	**711** 1564
340 **360**	14	**184** 405	**190** 418	**477** 1049	**851** 1872
380	15	**187** 411	**213** 469	**490** 1078	**890** 1958
400	16	**210** 462	**258** 568	**540** 1188	**1008** 2218
420	17	**245** 539	**269** 592	**586** 1289	**1100** 2420
440 **460**	18	**255** 561	**270** 594	**623** 1371	**1148** 2526
480	19	**268** 590	**277** 609	**690** 1518	**1235** 2717
500	20	**276** 607	**328** 722	**745** 1639	**1349** 2968
530	21	**314** 691	**357** 785	**899** 1978	**1570** 3454
560	22	**341** 750	**385** 847	**960** 2112	**1686** 3709
580	23	**375** 825	**405** 891	**1001** 2202	**1781** 3918
600	24	**390** 858	**460** 1012	**1056** 2323	**1906** 4193

TABLE 31. HEAVY SERIES

		Bearing	Housing	Support	Comp. Unit
mm	in.	**Kg** lb.	**Kg** lb.	**Kg** lb.	**Kg** lb.
–	–	–	–	–	–
–	–	–	–	–	–
–	–	–	–	–	–
–	–	–	–	–	–
–	–	–	–	–	–
100 **105**	3 11/16 4	**35** 77	**40** 88	**121** 266	**196** 431
110 **120**	4 3/16 4 1/2	**41** 90	**45** 90	**141** 310	**227** 499
125 **130**	4 11/16 5	**42** 92	**46** 101	**156** 343	**244** 536
135 **140**	5 3/16 5 1/2	**50** 110	**51** 112	**197** 433	**298** 655
150 **155**	5 11/16 6	**59** 130	**75** 165	**261** 574	**395** 869
160 **170**	6 7/16 6 1/2	**74** 163	**87** 191	**291** 640	**452** 994
175 **180**	6 11/16 7	**83** 183	**91** 200	**338** 744	**512** 1127
190 **200**	7 1/4 8	**105** 231	**120** 264	**454** 999	**679** 1494
220 **230**	8 1/2 9	**151** 332	**164** 361	**408** 1395	**949** 2088
240 **260**	9 1/2 10	**153** 337	**174** 383	**540** 1621	**1064** 2341
280	11	**203** 447	**201** 442	**459** 1010	**863** 1899
300	12	**242** 532	**249** 548	**1019** 2242	**1510** 3322
320	13	**327** 719	**300** 660	**1116** 2455	**1743** 3834
340 **360**	14	**375** 825	**361** 794	**1620** 3564	**2356** 5183
380 **400**	15 16	**436** 959	**433** 953	**1538** 3384	**2407** 5296
–	–	–	–	–	–
420 **440**	17	**400** 880	**443** 975	**1014** 2231	**1857** 4086
460	18	**636** 1399	**274** 603	**1513** 3329	**2423** 5331
–	–	–	–	–	–
500 **530**	20 21	**700** 1540	**880** 1936	**1863** 4099	**3443** 7575
–	–	–	–	–	–
560	22	**675** 1485	**694** 1527	**1847** 4063	**3216** 7075
580 **600**	23 24	**700** 1540	**770** 1694	**1794** 3947	**3264** 7181
–	–	–	–	–	–

HOUSED UNIT CONVERSION WORKSHEET

Option #1: To help us understand your application needs, please fill out the information below. This data will enable us to select the appropriate split cylindrical bearing housed unit that will perform best for your application.

Option #2: Please fill out the following information to help us select the appropriate split cylindrical bearing housed unit for your application.

Option #3: When converting to a different style of housed unit, use this worksheet to provide the application data specific to your project needs. This information is critical to ensuring the appropriate split cylindrical bearing unit is selected.

Date: _____

Customer Contact: _____ Timken Contact: _____

Application Details: _____

_____

Drive Details

Motor Power: _____ No. Belts: _____

Direct Drive: ____YES ____NO Drive Pulley Dia. (mm): _____

Belt Drive: ____YES ____NO Driven Pulley Dia. (mm): _____

Gear Drive: ____YES ____NO Current DE Bearing: _____

Gear Ratio: ____YES ____NO Current NDE Bearing: _____

Environment

Wet: ___YES ___NO Bearing Temp. (° C or ° F): _____

Dry: ___YES ___NO Shaft Diameter (mm): _____

Dust: ___YES ___NO

Severe: ___YES ___NO Shaft Speed (RPM): _____

Submerged: ____YES____NO

Load	***Lubrication***	***Specification***	***Amount***
Radial (kN or lbs): _____	Oil: ____YES ___NO	_____	_____
Axial (kN or lbs): _____	Grease: ____YES ___NO	_____	_____

Duty

Intermittent: ____YES ____NO

Continuous: ____YES ____NO

Current Sealing Arrangement: _____

_____

LIGHT SERIES

Light series bearing products are by far the most commonly utilized range within the split bearing family. With a wide variety of mounting and sealing solutions available, light series bearing units can readily be matched to an ever-increasing range of applications. If a standard catalog product does not meet your requirements, a Timken engineer will be happy to provide help and advice on your application.

The following topics are covered within this section:

LIGHT SERIES BEARING AND HOUSING

35 MM TO 155 MM (1 3⁄16 IN. TO 6 IN.)

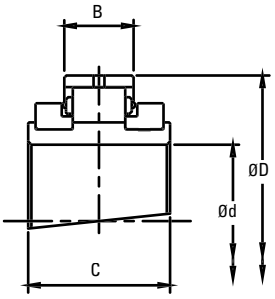

Expansion BX

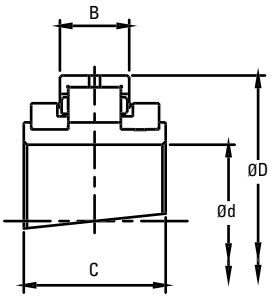

Retained BR

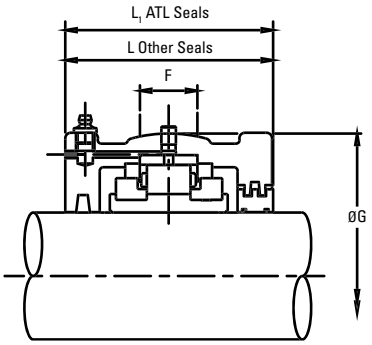

Shaft (d)		Reference		Bearings Ratings							Housing Reference						
		Add **BR** for Retained Add **BX** for Expansion e.g. LSE215BR		Dynamic C_r	Static C_{or}	Axial C_a	Max	D	B	C	ATL Seals Add **HRTL** for Retained Add **HXTL** for Expansion e.g. LS4HRTL	Other Seal Types Add **HR** for Retained Add **HX** for Expansion e.g. LSE215HR		G	F	L	L_1
mm	in.			**kN** lb.	**kN** lb.	**kN** lb.	RPM	**mm** in.	**mm** in.	**mm** in.				**mm** in.	**mm** in.	**mm** in.	**mm** in.
35 **40**	1 3⁄16 1 1⁄4 1 7⁄16 1 1⁄2	LSM35 LSM40	LSE103 LSE104 LSE107 LSE108	**65** 14613	**68** 15287	**3.20** 719.38	5400	**3.313** 84.14	**0.937** 23.80	**2.165** 55.00	LS1	LSM35 LSM40	LSE103 LSE104 LSE107 LSE108	**100.00** 3.937	**25** 1.0	**84** 3.3	**91** 3.6
45 **50**	1 11⁄16 1 3⁄4 1 15⁄16 2	LSM45 LSM50	LSE111 LSE112 LSE115 LSE200	**83** 18659	**87** 19558	**3.60** 809.30	4630	**3.875** 98.42	**1.000** 25.40	**2.362** 60.00	LS2	LSM45 LSM50	LSE111 LSE112 LSE115 LSE200	**117.48** 4.625	**25** 1.0	**96** 3.8	**98** 3.9
55 **60** **65**	2 3⁄16 2 1⁄4 2 7⁄16 2 1⁄2	LSM55 LSM60 LSM65	LSE203 LSE204 LSE207 LSE208	**103** 23155	**115** 25853	**5.40** 1213.95	3940	**4.500** 114.30	**1.063** 27.00	**2.362** 60.00	LS3	LSM55 LSM60 LSM65	LSE203 LSE204 LSE207 LSE208	**134.94** 5.313	**32** 1.3	**102** 4.0	**104** 4.1
70 **75**	2 11⁄16 2 3⁄4 2 15⁄16 3	LSM70 LSM75	LSE211 LSE212 LSE215 LSE300	**138** 31024	**161** 36194	**7.60** 1708.53	3310	**5.250** 133.35	**1.252** 31.80	**2.559** 65.00	LS4	LSM70 LSM75	LSE211 LSE212 LSE215 LSE300	**157.16** 6.187	**38** 1.5	**112** 4.4	**114** 4.5
80 **85** **90**	3 3⁄16 3 1⁄4 3 7⁄16 3 1⁄2	LSM80 LSM85 LSM90	LSE303 LSE304 LSE307 LSE308	**187** 42039	**231** 51931	**12.40** 2787.59	2790	**6.000** 152.4	**1.531** 38.90	**2.953** 75.00	LS5	LSM80 LSM85 LSM90	LSE303 LSE304 LSE307 LSE308	**177.80** 7.000	**50** 2.0	**134** 5.3	**136** 5.4
100 **105**	3 11⁄16 3 3⁄4 3 15⁄16 4	LSM100 LSM105	LSE311 LSE312 LSE315 LSE400	**288** 64745	**366** 82280	**16.00** 3596.90	2340	**6.875** 174.62	**1.783** 45.30	**3.346** 85.00	LS6	LSM100 LSM105	LSE311 LSE312 LSE315 LSE400	**203.20** 8.000	**50** 2.0	**132** 5.2	**134** 5.3
110 **115**	4 3⁄16 4 1⁄4 4 7⁄16 4 1⁄2	LSM110 LSM115	LSE403 LSE404 LSE407 LSE408	**316** 71040	**427** 95993	**18.60** 4181.39	1970	**8.000** 203.20	**1.846** 46.90	**3.543** 90.00	LS7	LSM110 LSM115	LSE403 LSE404 LSE407 LSE408	**231.78** 9.125	**64** 2.5	**140** 5.5	**142** 5.6
120 **125** **130**	4 11⁄16 4 3⁄4 4 15⁄16 5	LSM120 LSM125 LSM130	LSE411 LSE412 LSE415 LSE500	**363** 81606	**496** 111505	**22.20** 4990.69	1740	**8.750** 222.25	**2.126** 54.00	**3.740** 95.00	LS8	LSM120 LSM125 LSM130	LSE411 LSE412 LSE415 LSE500	**266.70** 10.500	**76** 3.0	**154** 6.1	**156** 6.1
135 **140**	5 3⁄16 5 1⁄4 5 7⁄16 5 1⁄2	LSM135 LSM140	LSE503 LSE504 LSE507 LSE508	**422** 94869	**585** 131513	**25.80** 5799.99	1570	**9.500** 241.30	**2.189** 55.60	**3.874** 98.40	LS9	LSM135 LSM140	LSE503 LSE504 LSE507 LSE508	**279.40** 11.000	**76** 3.0	**166** 6.5	**168** 6.6
150 **155** **160**	5 11⁄16 5 3⁄4 5 15⁄16 6	LSM150 LSM155 LSM160A	LSE511 LSE512 LSE515 LSE600	**459** 103187	**664** 149273	**29.40** 6609.30	1450	**10.000** 254.00	**2.189** 55.60	**3.874** 98.40	LS10 LS10E0548	LSM150 LSM155 LSM160A	LSE511 LSE512 LSE515 LSE600	**295.28** 11.625	**82** 3.2	**172** 6.8	**174** 6.9

LIGHT SERIES SUPPORT
S01 - S10

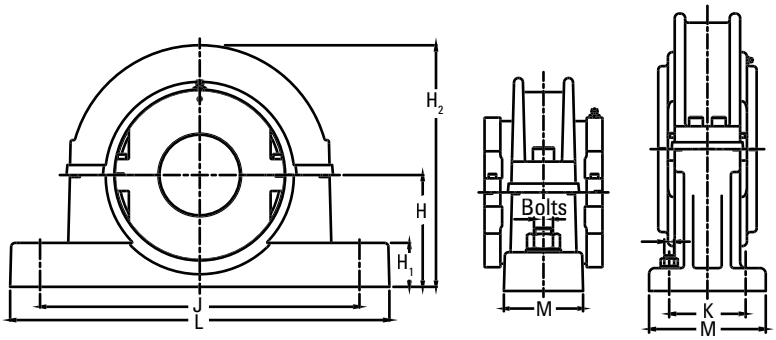

Shaft (d)		Support Reference	H	H_1	H_2	J x K	L x M	Bolts
mm	in.		**mm** in.	**mm** in.	**mm** in.	**mm** in.	**mm** in.	
35 **40**	1 3/16 1 1/4 1 7/16 1 1/2	S01	**60** 2.362	**22** 0.9	**138** 5.4	**180** 7.1	**228 x 60** 9 x 2.4	2 x M12
45 **50**	1 11/16 1 3/4 1 15/16 2	S02	**70** 2.756	**25** 1.0	**158** 6.2	**214** 8.4	**270 x 60** 10.6 x 2.4	2 x M16
55 **60** **65**	2 3/16 2 1/4 2 7/16 2 1/2	S03	**80** 3.150	**32** 1.3	**180** 7.1	**234** 9.2	**280 x 70** 11 x 2.8	2 x M16
70 **75**	2 11/16 2 3/4 2 15/16 3	S04	**95** 3.740	**38** 1.5	**208** 8.2	**270** 10.6	**330 x 76** 13 x 3	2 x M20
80 **85** **90**	3 3/16 3 1/4 3 7/16 3 1/2	S05 S05-4B	**112** 4.409 **112** 4.409	**44** 1.7 **44** 1.7	**242** 9.53 **242** 9.53	**320** 12.6 **328 x 88.9** 12.9 x 3.5	**380 x 90** 15 x 3.5 **380 x 140** 15 x 5.51	2 x M24 4 x M20
100 **105**	3 11/16 3 3/4 3 15/16 4	S06 S06-4B	**125** 4.921 **125** 4.921	**55** 2.17 **55** 2.17	**265** 10.43 **265** 10.43	**354** 13.9 **368 x 102** 14.5 x 4	**420 x 102** 16.5 x 4 **426 x 152** 16.8 x 6	2 x M24 4 x M20
110 **115**	4 3/16 4 1/4 4 7/16 4 1/2	S07 S07-4B	**143** 5.630 **143** 5.630	**60** 2.4 **60** 2.4	**303** 11.93 **303** 11.93	**392** 15.4 **412 x 114.3** 16.2 x 4.5	**466 x 120** 18.3 x 4.7 **476 x 172** 17.74 x 6.77	2 x M24 4 x M20
120 **125** **130**	4 11/16 4 3/4 4 15/16 5	S08	**162** 6.378	**38** 1.5	**372** 14.6	**450 x 120** 17.7 x 4.7	**508 x 178** 20 x 7	4 x M24
135 **140**	5 3/16 5 1/4 5 7/16 5 1/2	S09	**181** 7.126	**40** 1.6	**405** 15.9	**482 x 120** 19 x 4.7	**558 x 178** 22 x 7	4 x M24
150 **155** **160**	5 11/16 5 3/4 5 15/16 6	S10	**181** 7.126	**40** 1.6	**415** 16.3	**496 x 120** 19.5 x 4.7	**558 x 178** 22 x 7	4 x M24

LIGHT SERIES BEARING AND HOUSING

160 MM TO 350 MM (6 7⁄16 IN. TO 14 IN.)

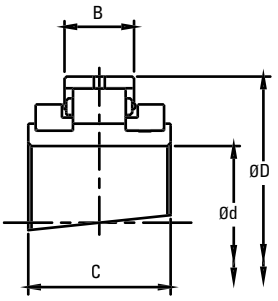

Expansion BX

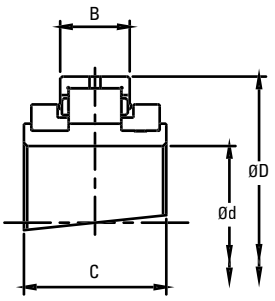

Retained BR

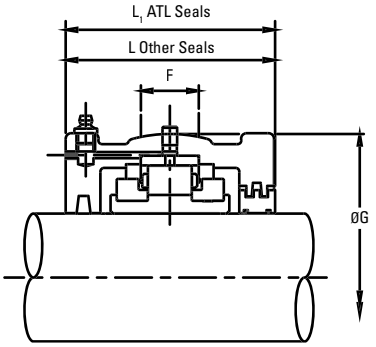

Shaft (d)		Reference		Bearings Ratings							Housing Reference						
		Add **BR** for Retained Add **BX** for Expansion e.g. LSE715BR		Dynamic C_r	Static C_{or}	Axial C_a	Max	D	B	C	ATL Seals Add **HRTL** for Retained Add **HXTL** for Expansion e.g. LS13HRTL	Other Seal Types Add **HR** for Retained Add **HX** for Expansion e.g. LS715HR		G	F	L	L_1
mm	in.			**kN** lb.	**kN** lb.	**kN** lb.	RPM	**mm** in.	**mm** in.	**mm** in.				**mm** in.	**mm** in.	**mm** in.	**mm** in.
160 **170A**	6 7⁄16 6 ½	LSM160 LSM170A	LSE607 LSE608	**583** 131064	**792** 178049	**33.00** 7419	1320	**273.05** 10.750	**60.30** 2.374	**109.00** 4.291	LS11	LSM160 LSM170A	LSE607 LSE608	**311.15** 12.250	**76** 3.0	**172** 6.8	**192** 7.6
170 **175** **180**	6 11⁄16 6 ¾ 6 15⁄16 7	LSM170 LSM175 LSM180	LSE611 LSE612 LSE615 LSE700	**524** 117800	**828** 186142	**36.40** 8183	1220	**285.75** 11.250	**55.50** 2.185	**109.00** 4.291	LS12	LSM170 LSM175 LSM180	LSE611 LSE612 LSE615 LSE700	**323.85** 12.750	**70** 2.8	**172** 6.8	**200** 7.9
190 **200**	7 ¼ 7 ½ 7 15⁄16 8	LSM190 LSM200	LSE704 LSE708 LSE715 LSE800	**614** 138033	**990** 222561	**41.00** 9217	1070	**311.15** 12.250	**60.30** 2.374	**109.00** 4.291	LS13	LSM190 LSM200	LSE704 LSE708 LSE715 LSE800	**358.78** 14.125	**86** 3.4	**172** 6.8	**200** 7.9
220 **230**	8 ½ 8 ⅞ 9	LSM220 LSM230	LSE808 LSE814 LSE900	**708** 159165	**1168** 262577	**49.00** 11016	930	**342.90** 13.500	**63.50** 2.500	**115.00** 4.528	LS14	LSM220 LSM230	LSE808 LSE814 LSE900	**387.35** 15.250	**82** 3.2	**178** 7.0	**216** 8.5
240 **250**	9 ½ 9 ¾ 10	LSM240 LSM250	LSE908 LSE912 LSE1000	**744** 167258	**1289** 289779	**57.80** 12994	820	**374.65** 14.750	**66.70** 2.626	**122.00** 4.803	LS15	LSM240 LSM250	LSE908 LSE912 LSE1000	**419.10** 16.500	**90** 3.5	**188** 7.4	**222** 8.7
260 **270** **280**	10 ½ 10 ¾ 11	LSM260 LSM270 LSM280	LSE1008 LSE1012 LSE1100	**848** 190638	**1502** 337663	**66.80** 15017	730	**406.40** 16.000	**69.00** 2.717	**128.00** 5.039	LS16	LSM260 LSM270 LSM280	LSE1008 LSE1012 LSE1100	**454.00** 17.874	**95** 3.7	**204** 8.0	**232** 9.1
300 **305**	11 ½ 12	LSM300 LSM305	LSE1108 LSE1200	**929** 208848	**1665** 374307	**78.20** 17580	650	**438.15** 17.250	**74.60** 2.937	**143.00** 5.630	LS17	LSM300 LSM305	LSE1108 LSE1200	**489.00** 19.252	**98** 3.9	**216** 8.5	**248** 9.8
320 **330**	12 ½ 13	LSM320 LSM330	LSE1208 LSE1300	**920** 206824	**1674** 376330	**89.00** 20008	590	**463.55** 18.250	**74.60** 2.937	**136.00** 5.354	LS18	LSM320 LSM330	LSE1208 LSE1300	**520.70** 20.500	**95** 3.7	**260** 10.2	–
340 **350**	14	LSM340 LSM350	LSE1400	**1022** 229755	**1965** 441745	**99.60** 22391	540	**488.95** 19.250	**74.60** 2.937	**136.00** 5.354	LS19	LSM340 LSM350	LSE1400	**546.10** 21.500	**98** 3.9	**260** 10.2	–

For triple labyrinth seal designations, please refer to page 32-34.

LIGHT SERIES SUPPORT
S11 - S19

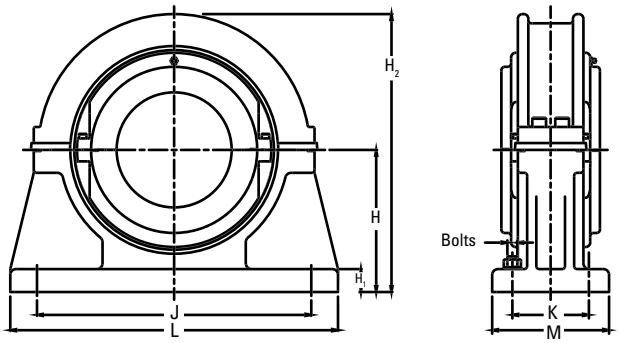

Shaft (d)		Support Reference	H	H_1	H_2	J x K	L x M	Bolts
mm	in.		**mm** in.	**mm** in.	**mm** in.	**mm** in.	**mm** in.	
160 **170A**	6 7/16 6 ½	S11	**213** 8.386	**32** 1.3	**430** 16.9	**368 x 114** 14.5 x 4.5	**508 x 178** 20 x 7	4 x M24
170 **175** **180**	6 11/16 6 ¾ 6 15/16 7	S12	**235** 9.252	**35** 1.4	**470** 18.5	**388 x 128** 15.3 x 5	**534 x 190** 21 x 7.5	4 x M24
190 **200**	7 ¼ 7 ½ 7 15/16 8	S13	**248** 9.764	**38** 1.5	**495** 19.5	**422 x 140** 16.6 x 5.5	**572 x 204** 22.5 x 8	4 x M24
220 **230**	8 ½ 8 7/8 9	S14	**270** 10.630	**40** 1.6	**540** 21.3	**460 x 140** 18.1 x 5.5	**636 x 216** 25 x 8.5	4 x M30
240 **250**	9 ½ 9 ¾ 10	S15	**292** 11.496	**44** 1.7	**585** 23.0	**502 x 140** 19.8 x 5.5	**686 x 228** 27 x 9	4 x M30
260 **270** **280**	10 ½ 10 ¾ 11	S16	**311** 12.244	**48** 1.9	**620** 24.4	**534 x 140** 21 x 5.5	**724 x 228** 28.5 x 9	4 x M30
300 **305**	11 ½ 12	S17	**343** 13.504	**50** 2.0	**685** 27.0	**584 x 178** 23 x 7	**762 x 254** 32 x 10	4 x M30
320 **330**	12 ½ 13	S18	**368** 14.488	**54** 2.1	**735** 28.9	**622 x 178** 24.5 x 7	**812 x 254** 32 x 10	4 x M36
340 **350**	14	S19	**387** 15.236	**57** 2.2	**775** 30.5	**654 x 166** 25.7 x 6.5	**850 x 254** 33.5 x 10	4 x M36

LIGHT SERIES BEARING AND HOUSING

360 MM TO 600 MM (15 IN. TO 24 IN.)

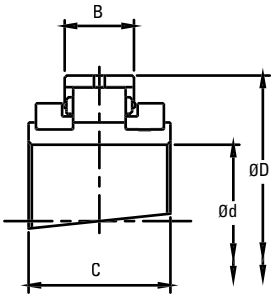

Expansion BX

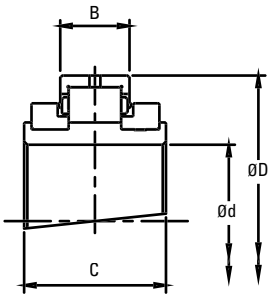

Retained BR

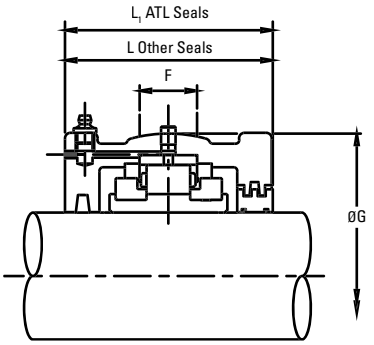

Shaft (d)		Reference		Bearings Ratings							Housing Reference						
		Add **BR** for Retained Add **BX** for Expansion e.g. LSM35BR		Dynamic C_r	Static C_{or}	Axial C_a	Max	D	B	C	ATL Seals Add **HRTL** for Retained Add **HXTL** for Expansion e.g. LS11HRTL	Other Seal Types Add **HR** for Retained Add **HX** for Expansion e.g. LSM35HR		G	F	L	L_1
mm	in.			**kN** lb.	**kN** lb.	**kN** lb.	RPM	**mm** in.	**mm** in.	**mm** in.				**mm** in.	**mm** in.	**mm** in.	**mm** in.
360 **380**	15	LSM360 LSM380	LSE1500	**1224** 275166	**2431** 546511	**110.40** 24819	500	**520.70** 20.500	**76.20** 3.000	**140.00** 5.512	LS20	LSM360 LSM380	LSE1500	**571.50** 22.500	**98** 3.9	**260** 10.2	–
400	16	LSM400	LSE1600	**1107** 248864	**2266** 509417	**115.60** 25988	460	**546.10** 21.500	**76.20** 3.000	**140.00** 5.512	LS21	LSM400	LSE1600	**603.30** 23.752	**102** 4.0	**280** 11.0	–
420	17	LSM420	LSE1700	**1146** 257631	**2418** 543588	**121.00** 27202	430	**571.50** 22.500	**76.20** 3.000	**140.00** 5.512	LS22	LSM420	LSE1700	**628.70** 24.752	**102** 4.0	**292** 11.5	–
440 **460**	18	LSM440 LSM460	LSE1800	**1185** 266399	**2469** 555053	**127.20** 28596	410	**596.90** 23.500	**76.20** 3.000	**140.00** 5.512	LS23	LSM440 LSM460	LSE1800	**650.90** 25.626	**4.3** 108	**304** 12.0	–
480	19	LSM480	LSE1900	**1348** 303042	**2965** 666559	**132.60** 29810	380	**628.65** 24.750	**81.00** 3.189	**144.00** 5.669	LS24	LSM480	LSE1900	**682.60** 26.874	**4.3** 108	**304** 12.0	–
500	20	LSM500	LSE2000	**1392** 312934	**3139** 705675	**137.80** 30979	360	**654.05** 25.750	**80.20** 3.157	**168.00** 6.614	LS25	LSM500	LSE2000	**717.60** 28.252	**114** 4.5	**304** 12.0	–
530	21	LSM530	LSE2100	**1431** 321702	**3316** 745466	**140.60** 31608	340	**692.15** 27.250	**81.00** 3.189	**168.00** 6.614	LS26	LSM530	LSE2100	**755.70** 29.752	**114** 4.5	**330** 13.0	–
560	22	LSM560	LSE2200	**1472** 330919	**3490** 784583	**142.40** 32013	330	**717.55** 28.250	**81.00** 3.189	**168.00** 6.614	LS27	LSM560	LSE2200	**781.10** 30.752	**114** 4.5	**336** 13.2	–
580	23	LSM580	LSE2300	**1616** 363291	**3841** 863491	**144.00** 32372	310	**749.00** 29.488	**84.10** 3.311	**172.00** 6.772	LS28	LSM580	LSE2300	**816.00** 32.126	**120** 4.7	**342** 13.5	–
600	24	LSM600	LSE2400	**1660** 373183	**4033** 906654	**146.80** 33002	300	**774.70** 30.500	**84.10** 3.311	**172.00** 6.772	LS29	LSM600	LSE2400	**841.40** 33.126	**120** 4.7	**342** 13.5	–

For triple labyrinth seal designations, please refer to page 32-34.

LIGHT SERIES SUPPORT
S20 - S29

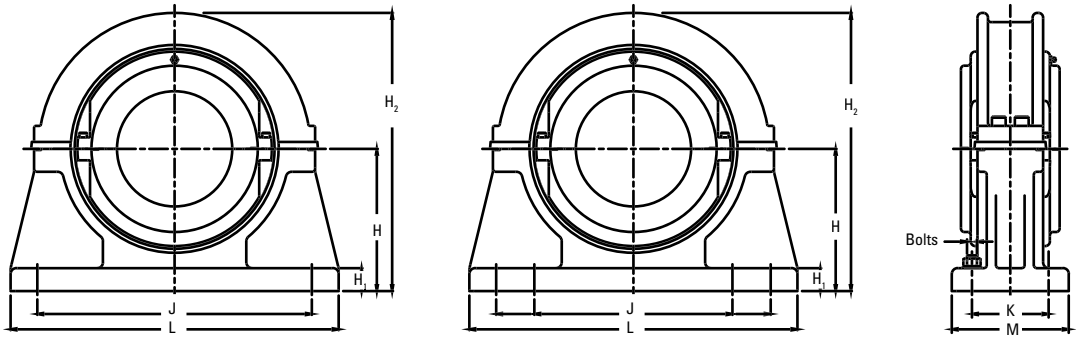

Shaft (d)		Support Reference	H	H_1	H_2	J x K	L x M	Bolts
mm	in.		**mm** in.	**mm** in.	**mm** in.	**mm** in.	**mm** in.	
360 **380**	15	S20	**397** 15.630	**60** 2.4	**795** 31.3	**676 x 166** 26.6 x 6.5	**902 x 254** 35.5 x 10	4 x M36
400	16	S21	**432** 17.008	**67** 2.6	**865** 34.1	**724 x 166** 28.5 x 6.5	**940 x 254** 37 x 10	4 x M36
420	17	S22	**445** 17.520	**67** 2.6	**890** 35.0	**756 x 166** 29.8 x 6.5	**966 x 254** 38 x 10	4 x M36
440 **460**	18	S23	**464** 18.268	**70** 2.8	**925** 36.4	**788 x 190** 31 x 7.5	**1042 x 280** 41 x 11	4 x M42
480	19	S24	**483** 19.016	**73** 2.9	**965** 38.0	**816 x 188** 32.1 x 7.4	**1092 x 304** 43 x 12	4 x M42
500	20	S25	**489** 19.252	**76** 3.0	**980** 38.6	**844 x 216** 33.2 x 8.5	**1092 x 304** 43 x 12	4 x M42
530	21	S26	**533** 20.984	**80** 3.1	**1065** 41.9	**904 x 206** 35.6 x 8.1	**1194 x 304** 47 x 12	4 x M42
560	22	S27	**552** 21.732	**83** 3.3	**1110** 43.7	**936 x 206** 36.9 x 8.1	**1220 x 304** 48 x 12	4 x M42
580	23	S28	**578** 22.756	**83** 3.3	**1156** 45.5	**1080 & 877 x 220** 42.5 & 34.5 x 8.7	**1372 x 304** 54 x 12	8 x M36
600	24	S29	**597** 23.504	**90** 3.5	**1200** 47.2	**1118 & 908 x 200** 44 & 35.7 x 7.9	**1372 x 304** 54 x 12	8 x M36

LIGHT SERIES SUPPORT
FLANGE UNITS 35 MM - 305 MM (1 3⁄16 IN. TO 12 IN.)

When faced with flat horizontal or vertical faces, flange units offer a simple mounting solution. As with pillow block supports, flange units are produced with spherical location to accommodate standard bearing housings and provide easy initial alignment of shaft and equipment.

To facilitate positive location of the flange to the surface, the rear face is recessed (dimensions N and V). This allows for a spigot (tolerance f8) to be located into the flange.

Bearing inspection is simply a matter of removing the top half of the flange and housing. Bearing replacement may also be achieved in the same manner if required.

When integrating flange units into new applications, it should be noted that a maximum radial load equivalent to 0.26 C_{or} is permissible. A maximum axial load of 0.25 C_a must also be taken into account for applications with thrust loading. Units for vertically oriented shafts may also need special consideration given to sealing arrangements.

As always, Timken will be happy to advise on any application issues.

Shaft (d)		Flange Reference	T	Bolts	R	P	H	N	V	L
mm	in.		**mm** in.		**mm** in.	**mm** in.	**mm** in.	**mm** in.	**mm** in.	**mm** in.
35 **40**	1 3⁄16 1 ¼ 1 7⁄16 1 ½	F01	**204** 8.0	4 x M12	**164** 6.5	**13** 0.5	**51** 2.0	**119.06** 4.687	**3** 0.1	**94** 3.7
45 **50**	1 11⁄16 1 ¾ 1 15⁄16 2	F02	**216** 8.5	4 x M12	**180** 7.1	**13** 0.5	**57** 2.2	**136.52** 5.375	**3** 0.1	**106** 4.2
55 **60** **65**	2 3⁄16 2 ¼ 2 7⁄16 2 ½	F03	**260** 10.2	4 x M12	**218** 8.6	**16** 0.6	**67** 2.6	**166.96** 571	**3** 0.1	**120** 4.7
70 **75**	2 11⁄16 2 ¾ 2 15⁄16 3	F04	**286** 11.3	4 x M12	**242** 9.5	**16** 0.6	**73** 2.9	**192.09** 7.563	**3** 0.1	**130** 5.1
80 **85** **90**	3 3⁄16 3 ¼ 3 7⁄16 3 ½	F05	**330** 13.0	4 x M16	**274** 10.8	**19** 0.7	**79** 3.1	**215.98** 500	**3** 0.1	**148** 5.8
100 **105**	3 11⁄16 3 ¾ 3 15⁄16 4	F06	**356** 14.0	4 x M16	**302** 11.9	**19** 0.7	**86** 3.4	**244.47** 9.625	**3** 0.1	**154** 6.1
110 **115**	4 3⁄16 4 ¼ 4 7⁄16 4 ½	F07	**382** 15.0	4 x M16	**334** 13.1	**22** 0.9	**92** 3.6	**276.22** 10.875	**3** 0.1	**164** 6.5
120 **125** **130**	4 11⁄16 4 ¾ 4 15⁄16 5	F08	**432** 17.0	4 x M24	**374** 14.7	**22** 0.9	**98** 3.9	**314.32** 12.375	**3** 0.1	**176** 6.9

For bearings and housings see pages 46-49.

contiued on next page

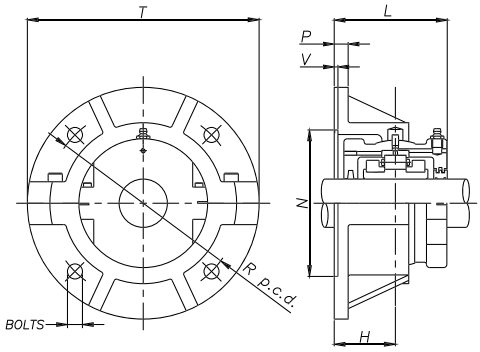

contiued from previous page

Shaft (d)		Flange Reference	T	Bolts	R	P	H	N	V	L
mm	in.		**mm** in.		**mm** in.	**mm** in.	**mm** in.	**mm** in.	**mm** in.	**mm** in.
135 **140**	5 3⁄16 5 1⁄4 5 7⁄16 5 1⁄2	F09	**444** 17.5	4 x M24	**384** 15.1	**25** 1.0	**98** 3.9	**317.51** 2.500	**3** 0.1	**182** 7.2
150 **155** **160A**	5 11⁄16 5 3⁄4 5 15⁄16 6	F10	**470** 18.5	4 x M24	**412** 16.2	**25** 1.0	**114** 4.5	**346.07** 13.625	**3** 0.1	**202** 8.0
160 **170A**	6 7⁄16 6 1⁄2	F11	**496** 19.5	4 x M24	**426** 16.8	**25** 1.0	**105** 4.1	**352.42** 13.875	**3** 0.1	**202** 8.0
170 **175** **180**	6 11⁄16 6 3⁄4 6 15⁄16 7	F12	**508** 20.0	4 x M24	**438** 17.2	**29** 1.1	**108** 4.3	**365.12** 14.375	**3** 0.1	**208** 8.2
190 **200**	7 1⁄4 7 1⁄2 7 15⁄16 8	F13	**534** 21.0	4 x M24	**474** 18.7	**32** 1.3	**108** 4.3	**400.05** 15.750	**3** 0.1	**208** 8.2
220 **230**	8 1⁄2 8 7⁄8 9	F14	**584** 23.0	4 x M30	**512** 20.2	**35** 1.4	**117** 4.6	**431.81** 7.000	**3** 0.1	**226** 8.9
240 **250**	9 1⁄2 9 3⁄4 10	F15	**610** 24.0	4 x M30	**542** 21.3	**35** 1.4	**117** 4.6	**463.55** 18.250	**3** 0.1	**228** 9.0
260 **270** **280**	10 1⁄2 10 3⁄4 11	F16	**660** 26.0	4 x M30	**584** 23.0	**38** 1.5	**124** 4.9	**504.82** 19.875	**3** 0.1	**240** 9.4
300 **305**	11 1⁄2 12	F17	**712** 28.0	4 x M30	**626** 24.6	**38** 1.5	**133** 5.2	**539.75** 21.250	**3** 0.1	**258** 10.2

For bearings and housings see pages 46-49.

LIGHT SERIES SUPPORT

TAKE-UP UNITS TT/TP 35 MM TO 155 MM (1 3⁄16 IN. TO 6 IN.)

This type of split unit can be found in use on materials handling equipment in many industries. Take-up units provide an efficient and readily accessible means of tensioning conveyor systems and large scale drives.

The units consist of either push-type or pull-type sliding supports into which standard housings and bearings may be mounted. When integrating take-up units into new applications, it should be noted that a maximum radial load equivalent to 0.3 C_{or} is permissible. As with all Timken units, a wide variety of sealing solutions may be applied dependant on the environment and application. Please contact a Timken engineer for assistance.

Shaft (d)		Support Reference		B	N	D	V	P	H	S	A	T	X	W	R	U	Y
		Tension-Type	Push-Type														
mm	in.			**mm** in.	**mm** in.	**mm** in.	**mm** in.	**mm** in.	**mm** in.	**mm** in.	**mm** in.	**mm** in.	**mm** in.	**mm** in.	**mm** in.	**mm** in.	**mm** in.
35 **40**	1 3⁄16 1 1⁄4 1 7⁄16 1 1⁄2	TT01	TP01	**102** 4.0	**172** 6.8	**153** 6.0	**76** 3.0	**14** 0.6	**29** 1.1	**25** 1.0	**32** 1.3	**216** 8.5	**20** 0.8	**25** 1.0	**24** 0.9	**5** 0.2	**13** 0.5
45 **50**	1 11⁄16 1 3⁄4 1 15⁄16 2	TT02	TP02	**114** 4.5	**204** 8.0	**178** 7.0	**88** 3.5	**16** 0.6	**29** 1.1	**29** 1.1	**128** 5.0	**242** 9.5	**24** 0.9	**25** 1.0	**25** 1.0	**5** 0.2	**13** 0.5
55 **60** **65**	2 3⁄16 2 1⁄4 2 7⁄16 2 1⁄2	TT03	TP03	**128** 5.0	**235** 9.3	**203** 8.0	**102** 4.0	**20** 0.8	**32** 1.3	**38** 1.5	**146** 5.7	**280** 11.0	**24** 0.9	**30** 1.2	**29** 1.1	**6** 0.2	**16** 0.6
70 **75**	2 11⁄16 2 3⁄4 2 15⁄16 3	TT04	TP04	**152** 6.0	**266** 10.5	**229** 9.0	**114** 4.5	**22** 0.9	**40** 1.6	**41** 1.6	**158** 6.2	**305** 12.0	**24** 0.9	**30** 1.2	**32** 1.3	**6** 0.2	**16** 0.5
80 **85** **90**	3 3⁄16 3 1⁄4 3 7⁄16 3 1⁄2	TT05	TP05	**190** 7.5	**318** 12.5	**280** 11.0	**140** 5.5	**22** 0.9	**40** 1.6	**51** 2.0	**190** 7.5	**368** 14.5	**30** 1.2	**38** 1.5	**35** 1.4	**6** 0.2	**16** 0.5

For bearings and housings see pages 46-49.

contiued on next page

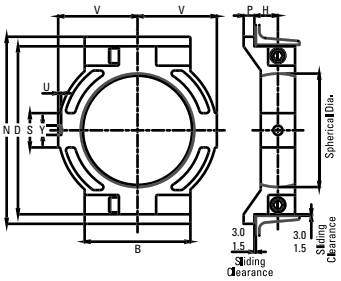

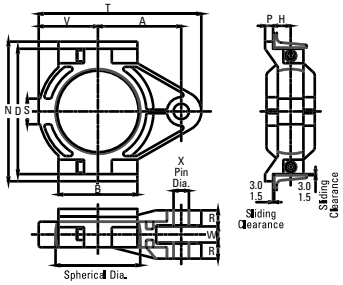

contiued from previous page

Shaft (d)		Support Reference		B	N	D	V	P	H	S	A	T	X	W	R	U	Y
		Tension-Type	Push-Type														
mm	in.			**mm** in.	**mm** in.	**mm** in.	**mm** in.	**mm** in.	**mm** in.	**mm** in.	**mm** in.	**mm** in.	**mm** in.	**mm** in.	**mm** in.	**mm** in.	**mm** in.
100 **105**	3 11⁄16 3 3⁄4 3 15⁄16 4	TT06	TP06	**204** 8.0	**342** 13.5	**305** 12.0	**152** 6.0	**22** 0.9	**43** 1.7	**51** 2.0	**210** 8.3	**414** 16.3	**36** 1.4	**44** 1.7	**35** 1.4	**6** 0.2	**19** 0.7
110 **115**	4 3⁄16 4 1⁄4 4 7⁄16 4 1⁄2	TT07	TP07	**216** 8.5	**382** 15.0	**343** 13.5	**162** 6.4	**22** 0.9	**48** 1.9	**70** 2.8	**228** 9.0	**445** 17.5	**42** 1.7	**44** 1.7	**41** 1.6	**6** 0.2	**19** 0.7
120 **125** **130**	4 11⁄16 4 3⁄4 4 15⁄16 5	TT08	TP08	**254** 10.0	**420** 16.5	**381** 15.0	**190** 7.5	**25** 1.0	**51** 2.0	**76** 3.0	**260** 10.2	**508** 20.0	**42** 1.7	**44** 1.7	**44** 1.7	**6** 0.2	**19** 0.7
135 **140**	5 3⁄16 5 1⁄4 5 7⁄16 5 1⁄2	TT09	TP09	**266** 10.5	**438** 17.2	**400** 15.7	**196** 7.7	**25** 1.0	**54** 2.1	**76** 3.0	**266** 10.5	**514** 20.2	**42** 1.7	**44** 1.7	**48** 1.9	**8** 0.3	**23** 0.9
150 **155** **160**	5 11⁄16 5 3⁄4 5 15⁄16 6	TT10	TP10	**266** 10.5	**464** 18.3	**426** 16.8	**204** 8.0	**25** 1.0	**57** 2.2	**86** 3.4	**280** 11.0	**546** 21.5	**48** 1.9	**50** 2.0	**51** 2.0	**8** 0.3	**23** 0.9

For bearings and housings see pages 46-49.

LIGHT SERIES SUPPORT
HANGER UNITS

Timken hanger units are the optimum solution for the support of screw conveyor shafts. The unit is comprised of a cast iron split housing into which expansion-type split cylindrical roller bearings are fitted. Provision of a drilled and tapped boss in one half of the housing allows for the unit to be mounted from the conveyor cross bracing or any other suitable surface. It is recommended that some form of swivel fixing be incorporated into the mounting arrangement to allow for static alignment.

Due to the arduous conditions often found in screw conveyor applications, correct seal selection is critical. Timken hanger units are available with many sealing variants, all of which can also be tailored to suit specific applications. When integrating hanging units into new applications, it should be noted that a maximum radial load equivalent to 0.3 C_{or} is permissible. Only suitable for an expansion (BX) type bearings. Please contact a Timken engineer for further information.

Hanger units have two seal grooves per side. They are supplied with double felt seals as standard. However, the standard seal groove will accept any combination of strip seal.

A further option is to have a tapped hole between the seal grooves at each end of the housing to incorporate a grease or air supply to purge the seals.

Shaft (d)		Support Reference		C	G	L	H	X[1]	Y
mm	in.	**mm**	in.	**mm** in.	**mm** in.	**mm** in.	**mm** in.	**mm** in.	**mm** in.
35 **40**	1 3/16 1 1/4 1 7/16 1 1/2	LSM35HG LSM40HG	LSE103HG LSE104HG LSE107HG LSE108HG	**55.0** 2.165	**106** 4.2	**108** 4.3	**66** 2.6	**M30** 1 - 8 UNC	**50** 2.0
45 **50**	1 11/16 1 3/4 1 15/16 2	LSM45HG LSM50HG	LSE111HG LSE112HG LSE115HG LSE200HG	**60.0** 2.362	**121** 4.8	**108** 4.3	**76** 3.0	**M30** 1 - 8 UNC	**50** 2.0
55 **60** **65**	2 3/16 2 1/4 2 7/16 2 1/2	LSM55HG LSM60HG LSM65HG	LSE203HG LSE204HG LSE207HG LSE208HG	**60.0** 2.362	**140** 5.5	**108** 4.3	**82** 3.2	**M30** 1 - 8 UNC	**50** 2.0
70 **75**	2 11/16 2 3/4 2 15/16 3	LSM70HG LSM75HG	LSE211HG LSE212HG LSE215HG LSE300HG	**65.0** 2.559	**162** 6.4	**130** 5.1	**92** 3.6	**M30** 1 - 8 UNC	**50** 2.0
80 **85** **90**	3 3/16 3 1/4 3 7/16 3 1/2	LSM80HG LSM85HG LSM90HG	LSE303HG LSE304HG LSE307HG LSE308HG	**75.0** 2.953	**187** 7.4	**146** 5.7	**114** 4.5	**M36** 1 1/2 - 6 UNC	**76** 3.0

[1] Hanger units with inch bore sizes have UNC mounting threads as standard. Hanger units with metric bore sizes have metric mounting threads as standard

contiued on next page

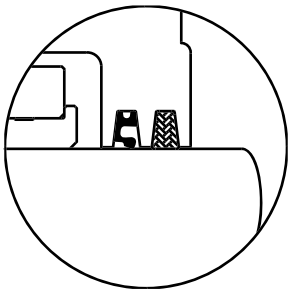

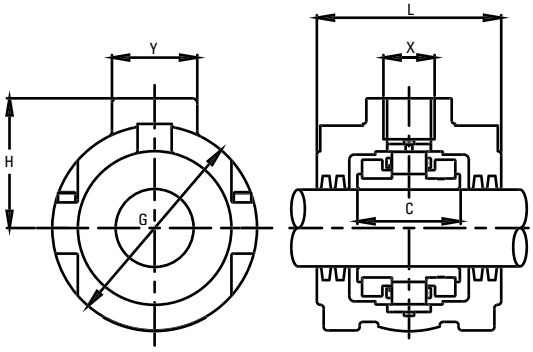

contiued from previous page

Shaft (d)		Support Reference		C	G	L	H	X[1]	Y
mm	in.			**mm** in.	**mm** in.	**mm** in.	**mm** in.	**mm** in.	**mm** in.
100 **105**	3 11/16 3 3/4 3 15/16 4	LSM100HG LSM105HG	LSE311HG LSE312HG LSE315HG LSE400HG	**85.0** 3.346	**210** 8.3	**152** 6.0	**128** 5.0	**M36** 1 1/2 - 6 UNC	**76** 3.0
110 **115**	4 3/16 4 1/4 4 7/16 4 1/2	LSM110HG LSM115HG	LSE403HG LSE404HG LSE407HG LSE408HG	**90.0** 3.543	**232** 9.1	**156** 6.1	**140** 5.5	**M36** 1 1/2 - 6 UNC	**76** 3.0
120 **125** **130**	4 11/16 4 3/4 4 15/16 5	LSM120 LSM125 LSM130	LSE411 LSE412 LSE415 LSE500	**95** 3.740	**276** 10.866	**162** 6.378	**156** 6.142	**M36** 1 1/2 - 6 UNC	**76** 2.992
135 **140**	5 3/16 5 1/4 5 7/16 5 1/2	LSM135 LSM140	LSE503 LSE504 LSE507 LSE508	**98.4** 3.874	**280** 11.024	**158** 6.220	**160** 6.299	**M36** 1 1/2 - 6 UNC	**75** 2.953

[1] Hanger units with inch bore sizes have UNC mounting threads as standard. Hanger units with metric bore sizes have metric mounting threads as standard

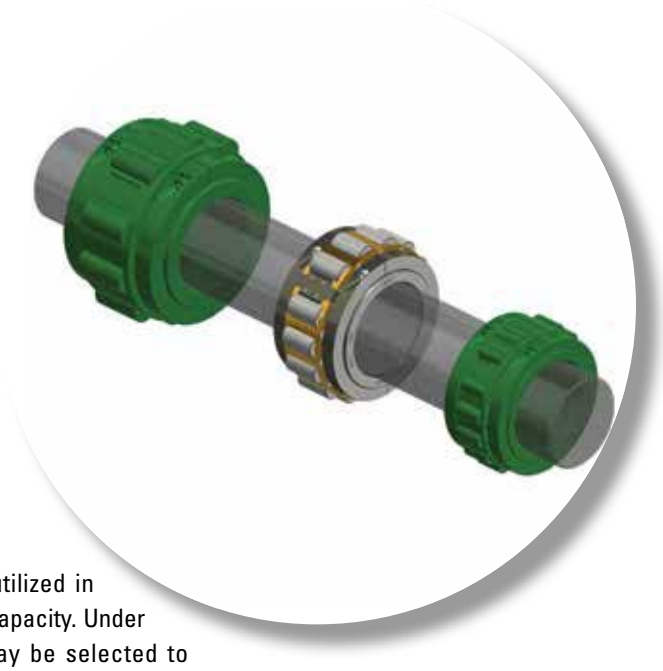

MEDIUM SERIES

Medium series bearing products can be utilized in applications requiring higher load-carrying capacity. Under normal conditions, medium series also may be selected to provide an extended bearing life when compared to light series. Medium series offers the same range of mounting and sealing solutions as light series, with the exception of hanger units. If a standard catalog product does not meet your requirements, a Timken engineer will be happy to provide help and advice on your application.

The following topics are covered within this section:

MEDIUM SERIES BEARING AND HOUSING

45 MM TO 155 MM (1 11⁄16 IN. TO 6 IN.)

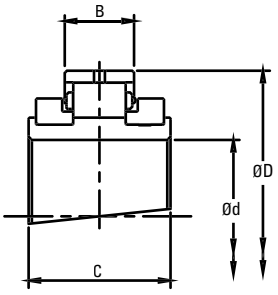

Expansion BX

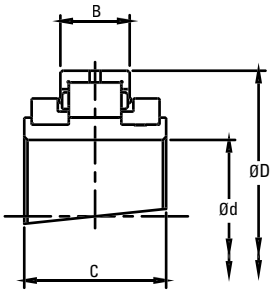

Retained BR

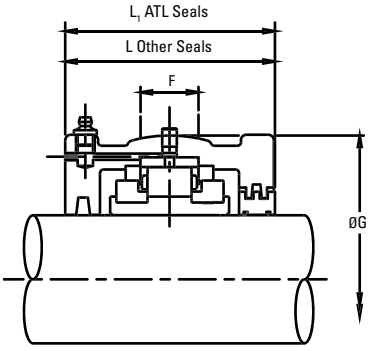

Shaft (d)		Reference		Bearings Ratings							Housing Reference						
		Add **BR** for Retained Add **BX** for Expansion e.g. MSM55BR		Dynamic C_r	Static C_{or}	Axial C_a	Max	D	B	C	ATL Seals Add **HRTL** for Retained Add **HXTL** for Expansion e.g. MS3HRTL	Other Seal Types Add **HR** for RetainedAdd **HX** for Expansion e.g. MSM55HR		G	F	L	L_1
mm	in.			**kN** lb.	**kN** lb.	**kN** lb.	RPM	**mm** in.	**mm** in.	**mm** in.				**mm** in.	**mm** in.	**mm** in.	**mm** in.
45 **50**	1 11⁄16 1 3⁄4 1 15⁄16 2	MSM45 MSM50	MSE111 MSE112 MSE115 MSE200	**121** 27202	**127** 28551	**6.20** 1394	4350	**107.95** 4.250	**35.00** 1.378	**67.50** 2.657	MS3	MSM45 MSM50	MSE111 MSE112 MSE115 MSE200	**134.94** 5.313	**32** 1.3	**112** 4.4	**114** 4.5
55 **60** **65**	2 3⁄16 2 1⁄4 2 7⁄16 2 1⁄2	MSM55 MSM60 MSM65	MSE203 MSE204 MSE207 MSE208	**168** 37768	**190** 42714	**8.80** 1978	3680	**127.00** 5.000	**38.90** 1.531	**72.30** 2.846	MS4	MSM55 MSM60 MSM65	MSE203 MSE204 MSE207 MSE208	**157.16** 6.187	**38** 1.5	**124** 4.9	**126** 5.0
70 **75**	2 11⁄16 2 3⁄4 2 15⁄16 3	MSM70 MSM75	MSE211 MSE212 MSE215 MSE300	**258** 58001	**300** 67443	**10.60** 2383	3080	**149.22** 5.875	**46.10** 1.815	**82.60** 3.252	MS5	MSM70 MSM75	MSE211 MSE212 MSE215 MSE300	**177.80** 7.000	**50** 2.0	**138** 5.4	**140** 5.5
80 **85** **90**	3 3⁄16 3 1⁄4 3 7⁄16 3 1⁄2	MSM80 MSM85 MSM90	MSE303 MSE304 MSE307 MSE308	**297** 66768	**353** 79358	**17.80** 4002	2520	**169.86** 6.687	**48.40** 1.906	**89.70** 3.531	MS6	MSM80 MSM85 MSM90	MSE303 MSE304 MSE307 MSE308	**203.20** 8.000	**50** 2.0	**152** 6.0	**154** 6.1
100 **105**	3 11⁄16 3 3⁄4 3 15⁄16 4	MSM100 MSM105	MSE311 MSE312 MSE315 MSE400	**388** 87226	**491** 110381	**25.00** 5620	2130	**193.68** 7.625	**51.60** 2.031	**92.10** 3.626	MS7	MSM100 MSM105	MSE311 MSE312 MSE315 MSE400	**231.78** 9.125	**64** 2.5	**144** 5.7	**146** 5.7
110 **115**	4 3⁄16 4 1⁄4 4 7⁄16 4 1⁄2	MSM110 MSM115	MSE403 MSE404 MSE407 MSE408	**454** 102063	**592** 133087	**31.20** 7014	1820	**228.60** 9.000	**57.20** 2.252	**100.00** 3.937	MS8	MSM110 MSM115	MSE403 MSE404 MSE407 MSE408	**266.70** 10.500	**76** 3.0	**160** 6.3	**162** 6.4
120 **125** **130**	4 11⁄16 4 3⁄4 4 15⁄16 5	MSM120 MSM125 MSM130	MSE411 MSE412 MSE415 MSE500	**525** 118025	**700** 157366	**38.20** 8588	1600	**254.00** 10.000	**63.50** 2.500	**114.30** 4.500	MS10	MSM120 MSM125 MSM130	MSE411 MSE412 MSE415 MSE500	**295.28** 11.625	**82** 3.2	**182** 7.2	**184** 7.2
135 **140**	5 3⁄16 5 1⁄4 5 7⁄16 5 1⁄2	MSM135 MSM140	MSE503 MSE504 MSE507 MSE508	**600** 134885	**817** 183669	**45.40** 10206	1450	**273.05** 10.750	**66.70** 2.626	**117.50** 4.626	MS30	MSM135 MSM140	MSE503 MSE504 MSE507 MSE508	**323.85** 12.750	**90** 3.5	**186** 7.3	**188** 7.4
150 **155** **160**	5 11⁄16 5 3⁄4 5 15⁄16 6	MSM150 MSM155 MSM160A	MSE511 MSE512 MSE515 MSE600	**730** 164111	**1034** 232453	**52.40** 11780	1320	**292.10** 11.500	**68.30** 2.689	**123.80** 4.874	MS31 MS32E0548	MSM150 MSM155 MSM160A	MSE511 MSE512 MSE515 MSE600	***336.55*** 13.250	***95*** 3.7	***202*** 8.0	***204*** 8.0

For triple labyrinth seal designations, please refer to page 32-34.

MEDIUM SERIES SUPPORT
S03 - S31

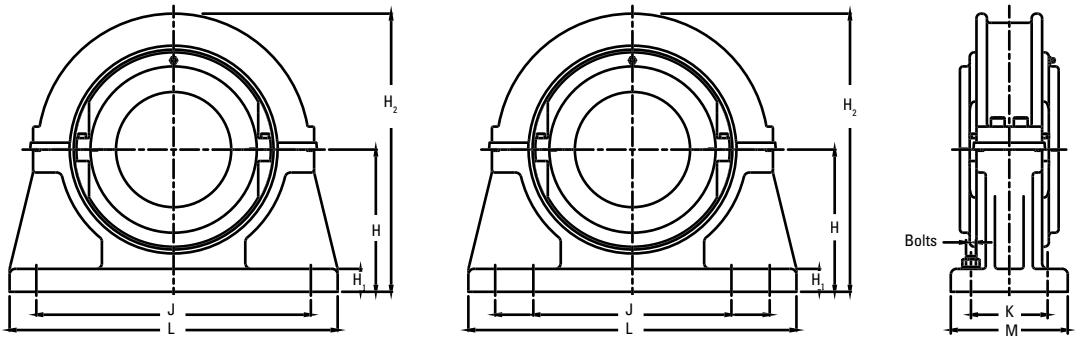

Shaft (d)		Support Reference	H	H_1	H_2	J x K	L x M	Bolts
mm	in.		**mm** in.	**mm** in.	**mm** in.	**mm** in.	**mm** in.	
45 **50**	1 11/16 1 3/4 1 15/16 2	S03	**80** 3.150	**32** 1.3	**180** 7.1	**234** 9.2	**280 x 70** 11 x 2.8	2 x M16
55 **60** **65**	2 3/16 2 1/4 2 7/16 2 1/2	S04	**95** 3.740	**38** 1.5	**208** 8.2	**270** 10.6	**330 x 76** 13 x 3	2 x M20
70 **75**	2 11/16 2 3/4 2 15/16 3	S05 S05-4B	**112** 4.409 **112** 4.409	**44** 1.7 **44** 1.7	**242** 9.53 **242** 9.53	**320** 12.6 **328 x 88.9** 12.9 x 3.5	**380 x 90** 15 x 3.5 **380 x 140** 15 x 5.51	2 x M20 4 x M20
80 **85** **90**	3 3/16 3 1/4 3 7/16 3 1/2	S06 S06-4B	**125** 4.921 **125** 4.921	**55** 2.17 **55** 2.17	**265** 10.43 **265** 10.43	**354** 13.9 **368 x 102** 14.5 x 4	**420 x 102** 16.5 x 4 **426 x 152** 16.8 x 6	2 x M24 4 x M20
100 **105**	3 11/16 3 3/4 3 15/16 4	S07 S07-4B	**143** 5.630 **143** 5.630	**60** 2.4 **60** 2.4	**303** 11.93 **303** 11.93	**392** 15.4 **412 x 114.3** 16.2 x 4.5	**466 x 120** 18.3 x 4.7 **476 x 172** 17.74 x 6.77	2 x M24 4 x M20
110 **115**	4 3/16 4 1/4 4 7/16 4 1/2	S08	**162** 6.378	**38** 1.5	**372** 14.6	**450 x 120** 17.7 x 4.7	**508 x 178** 20 x 7	4 x M24
120 **125** **130**	4 11/16 4 3/4 4 15/16 5	S10	**181** 7.126	**40** 1.6	**415** 16.3	**496 x 120** 19.5 x 4.7	**558 x 178** 22 x 7	4 x M24
135 **140**	5 3/16 5 1/4 5 7/16 5 1/2	S30	**203** 7.992	**50** 2.0	**460** 18.1	**546 x 120** 21.5 x 4.7	**610 x 178** 24 x 7	4 x M24
150 **155** **160**	5 11/16 5 3/4 5 15/16 6	S31	**210** 8.268	**50** 2.0	**470** 18.5	**558 x 128** 22 x 5	**636 x 204** 25 x 8	4 x M24

MEDIUM SERIES BEARING AND HOUSING

160 MM TO 360 MM (6 7⁄16 IN. TO 14 IN.)

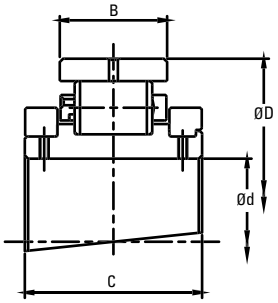

Expansion BX

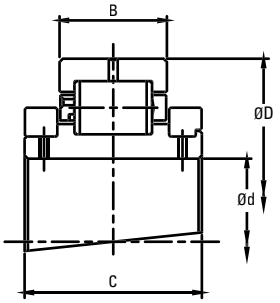

Retained BR

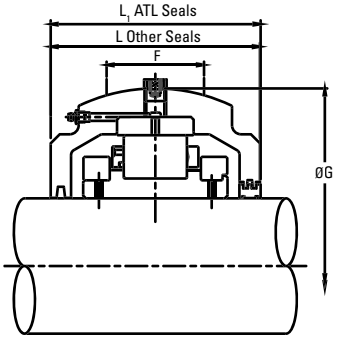

Shaft (d)		Reference		Bearings Ratings							Housing Reference						
		Add **BR** for Retained Add **BX** for Expansion e.g. MSM160BR		Dynamic C_r	Static C_{or}	Axial C_a	Max	D	B	C	ATL Seals Add **HRTL** for Retained Add **HXTL** for Expansion e.g. MS3HRTL	Other Seal Types Add **HR** for Retained Add **HX** for Expansion e.g. MSM160HR		G	F	L	L_1
mm	in.			**kN** lb.	**kN** lb.	**kN** lb.	RPM	**mm** in.	**mm** in.	**mm** in.				**mm** in.	**mm** in.	**mm** in.	**mm** in.
160 **170**	6 7⁄16 6 ½ 6 11⁄16 6 ¾	MSM160 MSM170	MSE607 MSE608 MSE611 MSE612	**842** 189289	**1175** 264151	**61.40** 13803	1200	**317.50** 12.500	**83.30** 3.280	**140.00** 5.512	MS32	MSM160 MSM170	MSE607 MSE608 MSE611 MSE612	**368.30** 14.500	**95** 3.7	**206** 8.1	**232** 9.1
175 **180**	6 15⁄16 7	MSM175 MSM180	MSE615 MSE700	**927** 208398	**1357** 305066	**71.20** 16006	1120	**330.20** 13.000	**83.30** 3.280	**140.00** 5.512	MS33	MSM175 MSM180	MSE615 MSE700	**381.00** 15.000	**95** 3.7	**222** 8.7	**242** 9.5
190 **200**	7 ¼ 7 ½ 7 15⁄16 8	MSM190 MSM200	MSE704 MSE708 MSE715 MSE800	**1013** 227732	**1516** 340810	**80.00** 17985	960	**368.30** 14.500	**90.50** 3.563	**156.00** 6.142	MS34	MSM190 MSM200	MSE704 MSE708 MSE715 MSE800	**425.50** 16.752	**105** 4.1	**235** 9.3	**258** 10.2
220 **230**	8 ½ 8 ⅞ 9	MSM220 MSM230	MSE808 MSE814 MSE900	**1138** 255833	**1668** 374981	**89.80** 20188	850	**393.70** 15.500	**90.50** 3.563	**163.00** 6.417	MS35	MSM220 MSM230	MSE808 MSE814 MSE900	**457.20** 18.000	**110** 4.3	**242** 9.5	**274** 10.8
240 **250** **260**	9 ½ 9 ¾ 10	MSM240 MSM250 MSM260	MSE908 MSE912 MSE1000	**1354** 304391	**2117** 475921	**98.80** 22211	750	**431.80** 17.000	**96.80** 3.811	**170.00** 6.693	MS36 MS36E0548	MSM240 MSM250 MSM260	MSE908 MSE912 MSE1000	**495.30** 19.500 –	**118** 4.6 –	**248** 9.8 –	**280** 11.0 –
270 **280**	10 ½ 10 ¾ 11	MSM270 MSM280	MSE1008 MSE1012 MSE1100	**1476** 331818	**2357** 529875	**113.80** 25583	670	**463.55** 18.250	**101.60** 4.000	**186.00** 7.323	MS37	MSM270 MSM280	MSE1008 MSE1012 MSE1100	**527.10** 20.752	**130** 5.1	**264** 10.4	**300** 11.8
300 **305**	11 ½ 12	MSM300 MSM305	MSE1108 MSE1200	**1587** 356772	**2644** 594395	**129.00** 29000	610	**495.30** 19.500	**103.20** 4.063	**193.00** 7.598	MS38	MSM300 MSM305	MSE1108 MSE1200	**552.50** 21.752	**128** 5.0	**268** 10.6	**306** 12.0
320 **330**	12 ½ 13	MSM320 MSM330	MSE1208 MSE1300	**1723** 387346	**2922** 656892	**144.20** 32417	550	**527.05** 20.750	**106.40** 4.189	**192.00** 7.559	MS39	MSM320 MSM330	MSE1208 MSE1300	**587.40** 23.126	**128** 5.0	**298** 11.7	–
340 **350** **360**	14	MSM340 MSM350 MSM360	MSE1400	**1989** 447145	**3403** 765025	**159.20** 35790	500	**565.15** 22.250	**115.90** 4.563	**200.00** 7.874	MS40	MSM340 MSM350 MSM360	MSE1400	**628.70** 24.752	**146** 5.7	**305** 12.0	–

For triple labyrinth seal designations, please refer to page 32-34.

MEDIUM SERIES SUPPORT
S32 - S40

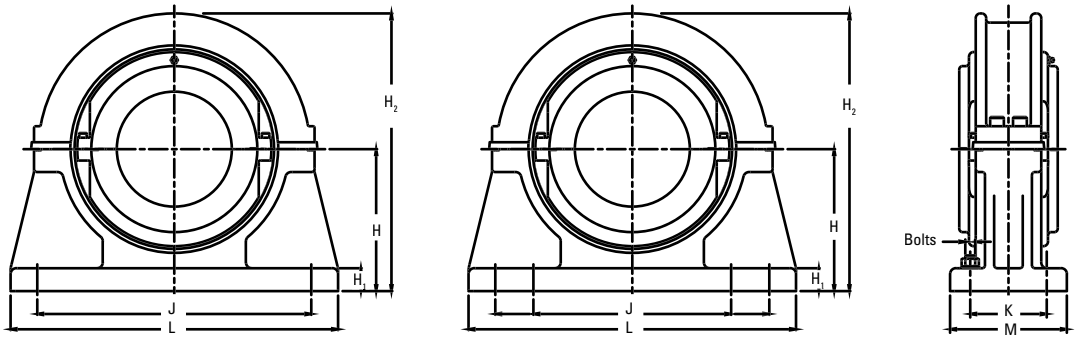

Shaft (d)		Support Reference	H	H_1	H_2	J x K	L x M	Bolts
mm	in.		**mm** in.	**mm** in.	**mm** in.	**mm** in.	**mm** in.	
160 **170**	6 7/16 6 ½	S32	**267** 10.512	**44** 1.7	**535** 21.1	**448 x 172** 17.6 x 6.8	**596 x 242** 23.5 x 9.5	4 x M30
175 **180**	6 11/16 6 ¾ 6 15/16 7	S33	**273** 10.748	**44** 1.7	**545** 21.5	**458 x 166** 18 x 6.5	**636 x 242** 25 x 9.5	4 x M30
190 **200**	7 ¼ 7 ½ 7 15/16 8	S34	**305** 12.008	**50** 2.0	**610** 24.0	**508 x 190** 20 x 7.5	**686 x 266** 27 x 10.5	4 x M30
220 **230**	8 ½ 8 ⅞ 9	S35	**324** 12.756	**50** 2.0	**650** 25.6	**550 x 190** 21.7 x 7.5	**750 x 280** 29.5 x 11	4 x M30
240 **250** **260**	9 ½ 9 ¾ 10	S36	**356** 14.016	**54** 2.1	**710** 28.0	**596 x 204** 23.5 x 8	**812 x 292** 32 x 11.5	4 x M36
270 **280**	10 ½ 10 ¾ 11	S37	**378** 14.882	**60** 2.4	**760** 29.9	**736 & 534 x 254** 29 & 21 x 10	**914 x 330** 36 x 13	8 x M30
300 **305**	11 ½ 12	S38	**394** 15.512	**60** 2.4	**790** 31.1	**768 & 566 x 254** 30.2 & 22.3 x 10	**958 x 330** 37.7 x 13	8 x M30
320 **330**	12 ½ 13	S39	**419** 16.496	**64** 2.5	**840** 33.1	**812 & 610 x 210** 32 & 24 x 8.3	**1016 x 292** 40 x 11.5	8 x M30
340 **350** **360**	14	S40	**451** 17.756	**67** 2.6	**900** 35.4	**864 & 660 x 280** 34 & 26 x 11	**1092 x 368** 43 x 14.5	8 x M36

MEDIUM SERIES BEARING AND HOUSING

380 MM TO 600 MM (15 IN. TO 24 IN.)

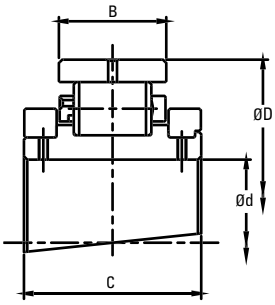

Expansion BX

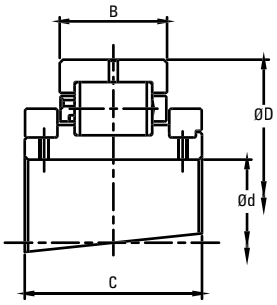

Retained BR

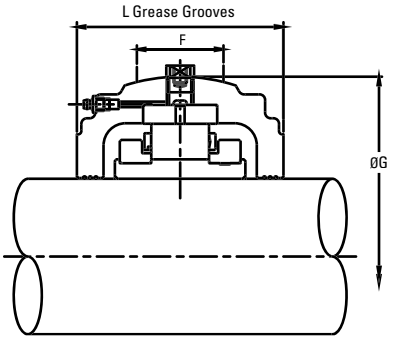

Shaft (d)		Reference		Bearings Ratings							Housing Reference						
		Add **BR** for Retained Add **BX** for Expansion e.g. MS1700BR		Dynamic C_r	Static C_{or}	Axial C_a	Max	D	B	C	ATL Seals Add **HRTL** for Retained Add **HXTL** for Expansion e.g. MS34HRTL	Other Seal Types Add **HR** for Retained Add **HX** for Expansion e.g. MSE1700HR		G	F	L	L_1
mm	in.			**kN** lb.	**kN** lb.	**kN** lb.	RPM	**mm** in.	**mm** in.	**mm** in.				**mm** in.	**mm** in.	**mm** in.	**mm** in.
380	15	MSM380	MSE1500	**1931** 434106	**3522** 791778	**174.40** 39207	460	**584.20** 23.000	**111.10** 4.374	**200.00** 7.874	MS41	MSM360 MSM380	MSE1500	**647.70** 25.500	**146** 5.7	**305** 12.0	–
400	16	MSM400	MSE1600	**2105** 473223	**3793** 852701	**188.40** 42354	430	**615.95** 24.250	**115.90** 4.563	**200.00** 7.874	MS42	MSM400	MSE1600	**685.80** 27.000	**146** 5.7	**324** 12.8	–
420	17	MSM420	MSE1700	**2324** 522456	**4164** 936105	**202.00** 45411	400	**647.70** 25.500	**119.10** 4.689	**200.00** 7.874	MS43	MSM420	MSE1700	**717.60** 28.252	**146** 5.7	**350** 13.8	–
440 **460**	18	MSM440 MSM460	MSE1800	**2215** 497952	**4183** 940376	**216.00** 48559	380	**666.75** 26.250	**115.90** 4.563	**200.00** 7.874	MS44	MSM440 MSM460	MSE1800	**733.40** 28.874	**146** 5.7	**350** 13.8	–
480	19	MSM480	MSE1900	**2445** 549658	**4594** 1032773	**230.00** 51706	360	**698.50** 27.500	**119.10** 4.689	**223.00** 8.780	MS45	MSM480	MSE1900	**762.00** 30.000	**146** 5.7	**368** 14.5	–
500	20	MSM500	MSE2000	**2453** 551456	**5054** 1137229	**244.00** 54853	340	**717.55** 28.250	**115.90** 4.563	**226.00** 8.898	MS46	MSM500	MSE2000	**787.40** 31.000	**146** 5.7	**368** 14.5	–
530	21	MSM530	MSE2100	**2702** 607434	**5467** 1230020	**258.00** 58001	330	**762.00** 30.000	**119.10** 4.689	**229.00** 9.016	MS47	**MSM530**	MSE2100	**831.90** 32.752	**150** 5.9	**368** 14.5	–
560	22	MSM560	MSE2200	**2851** 640930	**5794** 1303567	**272.00** 61148	310	**793.75** 31.250	**122.20** 4.811	**233.00** 9.173	MS48	MSM560	MSE2200	**866.80** 34.126	**152** 6.0	**374** 14.7	–
580	23	MSM580	MSE2300	**2982** 670380	**6231** 1402056	**286.00** 64295	300	**812.80** 32.000	**119.10** 4.689	**232.00** 9.134	MS49	MSM580	MSE2300	**883.00** 34.764	**152** 6.0	**374** 14.7	–
600	24	MSM600	MSE2400	**2972** 668132	**6243** 1404650	**300.00** 67443	290	**838.20** 33.000	**119.10** 4.689	**214.00** 8.425	MS50	MSM600	MSE2400	**914.40** 36.000	**152** 6.0	**388** 15.3	–

For triple labyrinth seal designations, please refer to page 32-34.

MEDIUM SERIES SUPPORT
S41 - S50

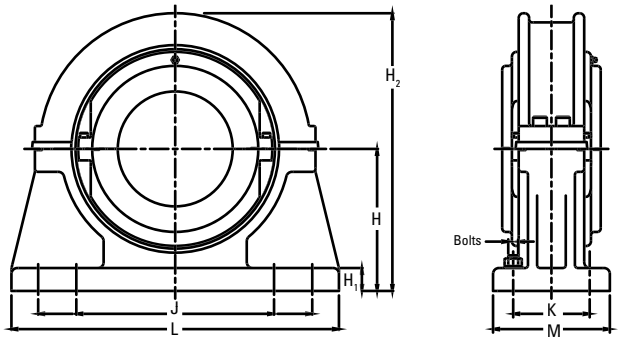

Shaft (d)		Support Reference	H	H_1	H_2	J x K	L x M	Bolts
mm	in.		**mm** in.	**mm** in.	**mm** in.	**mm** in.	**mm** in.	
380	15	S41	**464** 18.268	**67** 2.6	**925** 36.4	**886 & 682 x 280** 34.9 & 26.9 x 11	**1092 x 368** 43 x 14.5	8 x M36
400	16	S42	**495** 19.488	**70** 2.8	**990** 39.0	**934 & 730 x 280** 36.8 & 28.7 x 11	**1168 x 368** 46 x 14.5	8 x M36
420	17	S43	**514** 20.236	**70** 2.8	**1030** 40.6	**972 & 768 x 280** 38.3 & 30.2 x 11	**1194 x 368** 47 x 14.5	8 x M36
440 460	18	S44	**533** 20.984	**73** 2.9	**1070** 42.1	**996 & 788 x 280** 39.2 & 31 x 11	**1244 x 368** 49 x 14.5	8 x M36
480	19	S45	**552** 21.732	**76** 3.0	**1110** 43.7	**1042 & 812 x 280** 41 & 32 x 11	**1270 x 368** 50 x 14.5	8 x M36
500	20	S46	**572** 22.520	**80** 3.1	**1145** 45.1	**1074 & 844 x 280** 42.3 & 33.2 x 11	**1296 x 368** 51 x 14.5	8 x M36
530	21	S47	**594** 23.386	**83** 3.3	**1180** 46.5	**1118 & 890 x 280** 44 & 35 x 11	**1398 x 368** 55 x 14.5	8 x M36
560	22	S48	**616** 24.252	**86** 3.4	**1230** 48.4	**1158 & 930 x 280** 45.6 & 36.6 x 11	**1422 x 382** 56 x 15	8 x M42
580	23	S49	**635** 25.000	**89** 3.5	**1270** 50.0	**1187 & 959 x 280** 46.7 & 37.8 x 11	**1448 x 382** 57 x 15	8 x M42
600	24	S50	**673** 26.496	**92** 3.6	**1345** 53.0	**1238 & 1010 x 280** 48.7 & 39.8 x 11	**1524 x 382** 60 x 15	8 x M42

MEDIUM SERIES SUPPORT
FLANGE UNITS 45 MM TO 305 MM (1 11⁄16 IN. TO 12 IN.)

When faced with flat horizontal or vertical faces, flange units offer a simple mounting solution. As with pillow block supports, flange units are produced with spherical location to accommodate standard bearing housings and provide easy initial alignment of shaft and equipment.

To facilitate positive location of the flange to the surface, the rear face is recessed (dimensions N and V). This allows for a spigot (tolerance f8) to be located into the flange.

Bearing inspection is simply a matter of removing the top half of the flange and housing. Bearing replacement also may be achieved in the same manner if required.

When integrating flange units into new applications, it should be noted that a maximum radial load equivalent to 0.26 C_{or} is permissible. A maximum axial load of 0.25 C_a also must be taken into account for applications with thrust loading. Units for vertically oriented shafts may also need special consideration given to sealing arrangements.

Contact a Timken engineer for any application issues.

Shaft (d)		Flange Reference	T	Bolts	R	P	H	N	V	L
mm	in.		**mm** in.		**mm** in.	**mm** in.	**mm** in.	**mm** in.	**mm** in.	**mm** in.
45 **50**	1 11⁄16 1 3⁄4 1 15⁄16 2	F03	**260** 10.2	4 x M12	**218** 8.6	**16** 0.6	**67** 2.6	**166.9** 6.571	**3** 0.1	**124** 4.9
55 **60** **65**	2 3⁄16 2 1⁄4 2 7⁄16 2 1⁄2	F04	**286** 11.3	4 x M12	**242** 9.5	**16** 0.6	**73** 2.9	**192.09** 7.563	**3** 0.1	**136** 5.4
70 **75**	2 11⁄16 2 3⁄4 2 15⁄16 3	F05	**330** 13.0	4 x M16	**274** 10.8	**19** 0.7	**79** 3.1	**215.9** 8.500	**3** 0.1	**150** 5.9
80 **85** **90**	3 3⁄16 3 1⁄4 3 7⁄16 3 1⁄2	F06	**356** 14.0	4 x M16	**302** 11.9	**19** 0.7	**86** 3.4	**244.47** 9.625	**3** 0.1	**164** 6.5
100 **105**	3 11⁄16 3 3⁄4 3 15⁄16 4	F07	**382** 15.0	4 x M16	**334** 13.1	**22** 0.9	**92** 3.6	**276.22** 10.875	**3** 0.1	**166** 6.5
110 **115**	4 3⁄16 4 1⁄4 4 7⁄16 4 1⁄2	F08	**432** 17.0	4 x M24	**374** 14.7	**22** 0.9	**98** 3.9	**314.32** 12.375	**3** 0.1	**180** 7.1
120 **125** **130**	4 11⁄16 4 3⁄4 4 15⁄16 5	F10	**470** 18.5	4 x M24	**412** 16.2	**25** 1.0	**114** 4.5	**346.07** 13.625	**3** 0.1	**206** 8.1
135 **140**	5 3⁄16 5 1⁄4 5 7⁄16 5 1⁄2	F30	**508** 20.0	4 x M24	**444** 17.5	**25** 1.0	**114** 4.5	**377.82** 14.875	**3** 0.1	**208** 8.2

For bearings and housings see pages 60, 62 and 64.

contiued on next page

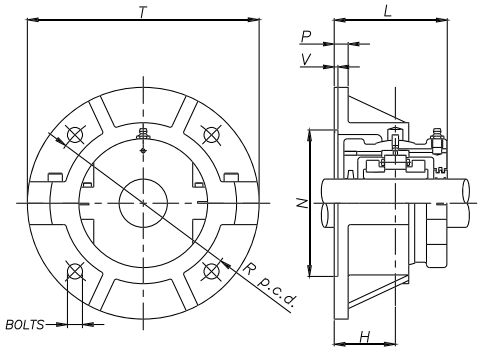

contiued from previous page

Shaft (d)		Flange Reference	T	Bolts	R	P	H	N	V	L
mm	in.		**mm** in.		**mm** in.	**mm** in.	**mm** in.	**mm** in.	**mm** in.	**mm** in.
150 **155** **160A**	5 11/16 5 3/4 5 15/16 6	F31	**534** 21.0	4 x M24	**466** 18.3	**25** 1.0	**124** 4.9	**393.70** 15.500	**3** 0.1	**226** 8.9
160 **170**	6 7/16 6 1/2	F32	**584** 23.0	4 x M30	**508** 20.0	**29** 1.1	**124** 4.9	**428.62** 16.875	**5** 0.2	**240** 9.4
175 **180**	6 11/16 6 3/4 6 15/16 7	F33	**596** 23.5	4 x M30	**524** 20.6	**32** 1.3	**130** 5.1	**444.50** 17.500	**5** 0.2	**252** 9.9
190 **200**	7 1/4 7 1/2 7 15/16 8	F34	**648** 25.5	4 x M30	**572** 22.5	**32** 1.3	**137** 5.4	**492.12** 19.375	**5** 0.2	**266** 10.5
220 **230**	8 1/2 8 7/8 9	F35	**712** 28.0	4 x M36	**620** 24.4	**35** 1.4	**146** 5.7	**527.05** 20.750	**5** 0.2	**284** 11.2
240 **250** **260**	9 1/2 9 3/4 10	F36	**736** 29.0	4 x M36	**660** 26.0	**38** 1.5	**149** 5.9	**568.32** 22.375	**5** 0.2	**290** 11.4
270 **280**	10 1/2 10 3/4 11	F37	**762** 30.0	8 x M30	**682** 26.9	**38** 1.5	**159** 6.3	**603.25** 23.750	**5** 0.2	**310** 12.2
300 **305**	11 1/2 12	F38	**788** 31.0	8 x M30	**708** 27.9	**41** 1.6	**162** 6.4	**628.65** 24.750	**5** 0.2	**316** 12.4

MEDIUM SERIES SUPPORT
TAKE-UP UNITS TT/TP 45 MM TO 155 MM (1 11⁄16 IN. TO 6 IN.)

This type of split unit can be found in use on materials handling equipment in many industries. Take-up units provide an efficient and readily accessible means of tensioning conveyor systems and large scale drives.

The units consist of either push-type or pull-type sliding supports into which standard housings and bearings may be mounted. When integrating take-up units into new applications, it should be noted that a maximum radial load equivalent to 0.3 C_{or} is permissible. As with all Timken units, a wide variety of sealing solutions may be applied dependant on the environment and application. Please contact a Timken engineer for assistance.

Shaft (d)		Support Reference		B	N	D	V	P	H	S	A	T	X	W	R	U	Y
		Tension-Type	Push-Type														
mm	in.			**mm** in.	**mm** in.	**mm** in.	**mm** in.	**mm** in.	**mm** in.	**mm** in.	**mm** in.	**mm** in.	**mm** in.	**mm** in.	**mm** in.	**mm** in.	**mm** in.
45 **50**	1 11⁄16 1 3⁄4 1 15⁄16 2	TT03	TP03	**128** 5.0	**235** 9.3	**203** 8.0	**102** 4.0	**20** 0.8	**32** 1.3	**38** 1.5	**146** 5.7	**280** 11.0	**24** 0.9	**30** 1.2	**29** 1.1	**6** 0.2	**16** 0.6
55 **60** **65**	2 3⁄16 2 1⁄4 2 7⁄16 2 1⁄2	TT04	TP04	**152** 6.0	**266** 10.5	**229** 9.0	**114** 4.5	**22** 0.9	**40** 1.6	**41** 1.6	**158** 6.2	**305** 12.0	**24** 0.9	**30** 1.2	**32** 1.3	**6** 0.2	**16** 0.6
70 **75**	2 11⁄16 2 3⁄4 2 15⁄16 3	TT05	TP05	**190** 7.5	**318** 12.5	**280** 11.0	**140** 5.5	**22** 0.9	**40** 1.6	**51** 2.0	**190** 7.5	**368** 14.5	**30** 1.2	**38** 1.5	**35** 1.4	**6** 0.2	**16** 0.6
80 **85** **90**	3 3⁄16 3 1⁄4 3 7⁄16 3 1⁄2	TT06	TP06	**204** 8.0	**342** 13.5	**305** 12.0	**152** 6.0	**22** 0.9	**43** 1.7	**51** 2.0	**210** 8.3	**414** 16.3	**36** 1.4	**44** 1.7	**35** 1.4	**6** 0.2	**19** 0.7
100 **105**	3 11⁄16 3 3⁄4 3 15⁄16 4	TT07	TP07	**216** 8.5	**382** 15.0	**343** 13.5	**162** 6.4	**22** 0.9	**48** 1.9	**70** 2.8	**228** 9.0	**445** 17.5	**42** 1.7	**44** 1.7	**41** 1.6	**6** 0.2	**19** 0.7

For bearings and housings see pages 60, 62 and 64.

contiued on next page

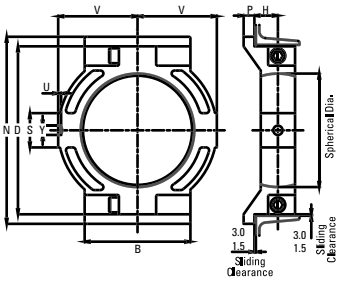

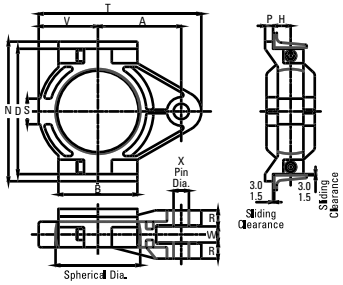

contiued from previous page

Shaft (d)		Support Reference		B	N	D	V	P	H	S	A	T	X	W	R	U	Y
		Tension-Type	Push-Type														
mm	in.			**mm** in.	**mm** in.	**mm** in.	**mm** in.	**mm** in.	**mm** in.	**mm** in.	**mm** in.	**mm** in.	**mm** in.	**mm** in.	**mm** in.	**mm** in.	**mm** in.
110 **115**	4 3⁄16 4 1⁄4 4 7⁄16 4 1⁄2	TT08	TP08	**254** 10.0	**420** 16.5	**381** 15.0	**190** 7.5	**25** 1.0	**51** 2.0	**76** 3.0	**260** 10.2	**508** 20.0	**42** 1.7	**44** 1.7	**44** 1.7	**6** 0.2	**19** 0.7
120 **125** **130**	4 11⁄16 4 3⁄4 4 15⁄16 5	TT10	TP10	**266** 10.5	**464** 18.3	**426** 16.8	**204** 8.0	**25** 1.0	**57** 2.2	**86** 3.4	**280** 11.0	**546** 21.5	**48** 1.9	**50** 2.0	**51** 2.0	**8** 0.3	**23** 0.9
135 **140**	5 3⁄16 5 1⁄4 5 7⁄16 5 1⁄2	TT30	TP30	**280** 11.0	**502** 19.8	**464** 18.3	**222** 8.7	**25** 1.0	**60** 2.4	**92** 3.6	**298** 11.7	**584** 23.0	**48** 1.9	**50** 2.0	**54** 2.1	**8** 0.3	**23** 0.9
150 **155** **160**	5 11⁄16 5 3⁄4 5 15⁄16 6	TT31	TP31	**305** 12.0	**528** 20.8	**489** 19.3	**235** 9.3	**25** 1.0	**64** 2.5	**92** 3.6	**312** 12.3	**616** 24.3	**48** 1.9	**50** 2.0	**57** 2.2	**10** 0.4	**26** 1.0

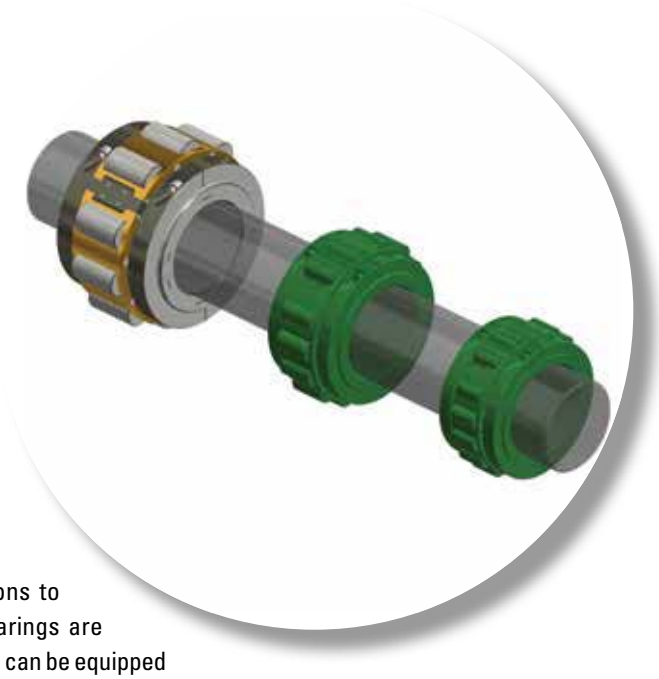

HEAVY SERIES

Heavy series bearing products offer solutions to the most demanding of load conditions. Bearings are supported by robust and durable mountings and can be equipped with a variety of sealing solutions. If a standard catalog product does not meet your requirements, a Timken engineer will be happy to provide help and advice on your application.

The following topics are covered within this section:

HEAVY SERIES BEARING AND HOUSING

100 MM TO 260 MM (3 11⁄16 IN. TO 10 IN.)

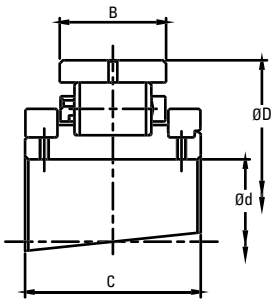

Expansion BX

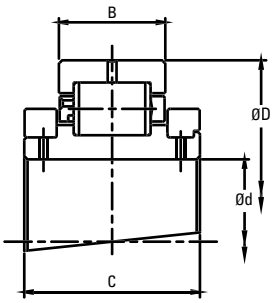

Retained BR

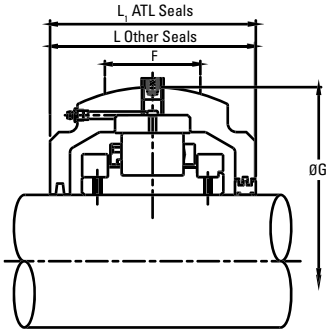

Shaft (d)		Reference		Bearings Ratings							Housing Reference						
		Add **BR** for Retained Add **BX** for Expansion e.g. HSE515BR		Dynamic C_r	Static C_{or}	Axial C_a	Max	D	B, B_1	C	ATL Seals Add **HRTL** for Retained Add **HXTL** for Expansion e.g. HS58HRTL	Other Seal Types Add **HR** for Retained Add **HX** for Expansion e.g.HSE515HR		G	F	L	L_1
mm	in.			**kN** lb.	**kN** lb.	**kN** lb.	RPM	**mm** in.	**mm** in.	**mm** in.				**mm** in.	**mm** in.	**mm** in.	**mm** in.
100 **105**	3 11⁄16 3 3⁄4 3 15⁄16 4	HSM100 HSM105	HSE311 HSE312 HSE315 HSE400	**653** 146800	**783** 176025	**31.20** 7014	1820	**254.00** 10.000	**84.20** 3.315	**136.00** 5.354	HS54	HSM100 HSM105	HSE311 HSE312 HSE315 HSE400	**308.00** 12.126	**95** 3.7	**200** 7.9	**206** 8.1
110 **115** **120**	4 3⁄16 4 1⁄4 4 7⁄16 4 1⁄2	HSM110 HSM115 HSM120	HSE403 HSE404 HSE407 HSE408	**656** 147475	**801** 180072	**39.10** 8790	1640	**266.70** 10.500	**87.30** 3.437	**147.00** 5.787	HS55	HSM110 HSM115 HSM120	HSE403 HSE404 HSE407 HSE408	**323.85** 12.750	**102** 4.0	**210** 8.3	**222** 8.7
125 **130**	4 11⁄16 4 3⁄4 4 15⁄16 5	HSM125 HSM130	HSE411 HSE412 HSE415 HSE500	**753** 169281	**974** 218964	**49.00** 11016	1500	**279.40** 11.000	**73.10** 2.878 **84.20** 3.315	**140.00** 5.512	HS56	HSM125 HSM130	HSE415 HSE500	**323.85** 12.750	**102** 4.0	**214** 8.4	**222** 8.7
135 **140**	5 3⁄16 5 1⁄4 5 7⁄16 5 1⁄2	HSM135 HSM140	HSE503 HSE504 HSE507 HSE508	**928** 208623	**1265** 284383	**58.80** 13219	1340	**304.80** 12.000	**79.40** 3.126 **90.50** 3.563	**147.00** 5.787	HS57	HSM135 HSM140	HSE503 HSE504 HSE507 HSE508	**355.60** 14.000	**108** 4.3	**216** 8.5	**230** 9.1
150 **155**	5 11⁄16 5 3⁄4 5 15⁄16 6	HSM150 HSM155	HSE511 HSE512 HSE515 HSE600	**1037** 233127	**1325** 297872	**69.40** 15602	1220	**330.20** 13.000	**81.00** 3.189 **96.90** 3.815	**160.00** 6.299	HS58	HSM150 HSM155	HSE511 HSE512 HSE515 HSE600	**393.70** 15.500	**114** 4.5	**232** 9.1	**254** 10.0
160 **170**	6 7⁄16 6 1⁄2 6 11⁄16	HSM160 HSM170	HSE607 HSE608 HSE611	**1196** 268871	**1576** 354299	**79.20** 17805	1110	**355.60** 14.000	**103.20** 4.063	**171.00** 6.732	HS59	HSM160 HSM170	HSE607 HSE608 HSE611	**422.30** 16.626	**120** 4.7	**244** 9.6	**268** 10.6
175 **180**	6 3⁄4 6 15⁄16 7	HSM175 HSM180	HSE612 HSE615 HSE700	**1330** 298996	**1867** 419718	**89.00** 20008	1030	**374.65** 14.750	**92.10** 3.626 **108.80** 4.283	**178.00** 7.008	HS60	HSM175 HSM180	HSE612 HSE615 HSE700	**431.80** 17.000	**132** 5.2	**254** 10.0	**284** 11.2
190 **200**	7 1⁄4 7 1⁄2 7 15⁄16 8	HSM190 HSM200	HSE704 HSE708 HSE715 HSE800	**1597** 359020	**2285** 513688	**99.60** 22391	880	**419.10** 16.500	**97.70** 3.846 **118.30** 4.657	**191.00** 7.520	HS61	HSM190 HSM200	HSE704 HSE708 HSE715 HSE800	**489.00** 19.252	**146** 5.7	**270** 10.6	**300** 11.8
220 **230**	8 1⁄2 8 7⁄8 9	HSM220 HSM230	HSE808 HSE814 HSE900	**1665** 374307	**2455** 551906	**109.40** 24594	760	**469.90** 18.500	**109.60** 4.315 **131.80** 5.189	**212.00** 8.346	HS62	HSM220 HSM230	HSE808 HSE814 HSE900	**546.10** 21.500	**165** 6.5	**298** 11.7	**334** 13.1
240 **260**	9 1⁄2 9 3⁄4 10	HSM240 HSM260	HSE908 HSE912 HSE1000	**1896** 426238	**2789** 626992	**130.80** 29405	700	**482.60** 19.000	**105.60** 4.157 **124.60** 4.906	**211.00** 8.307	HS63 HS63E0548	HSM240 HSM260	HSE908 HSE912 HSE1000	**558.80** 22.000	**165** 6.5	**298** 11.7	**334** 13.1

For triple labyrinth seal designations, please refer to page 32-34.

HEAVY SERIES SUPPORT
S54 - S63

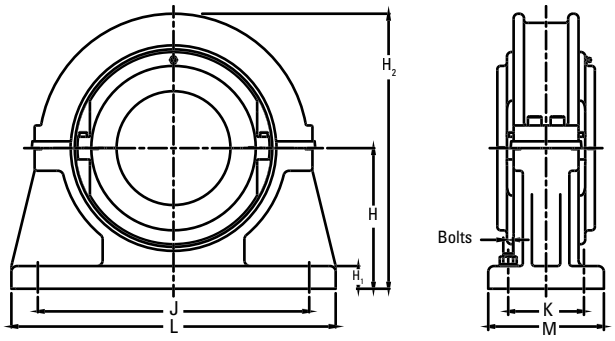

Shaft (d)		Support Reference	H	H_1	H_2	J x K	L x M	Bolts
mm	in.		**mm** in.	**mm** in.	**mm** in.	**mm** in.	**mm** in.	
100 **105**	3 11/16 3 3/4 3 15/16 4	S54	**191** 7.520	**38** 1.5	**405** 15.9	**438 x 82** 17.2 x 3.2	**514 x 152** 20.2 x 6	4 x M24
110 **115** **120**	4 3/16 4 1/4 4 7/16 4 1/2	S55	**197** 7.756	**38** 1.5	**425** 16.7	**458 x 88** 18 x 3.5	**534 x 166** 21 x 6.5	4 x M24
125 **130**	4 15/16 5	S56	**203** 7.992	**48** 1.9	**435** 17.1	**470 x 96** 18.5 x 3.8	**546 x 166** 21.5 x 6.5	4 x M24
135 **140**	5 3/16 5 1/4 5 7/16 5 1/2	S57	**229** 9.016	**54** 2.1	**485** 19.1	**514 x 102** 20.2 x 4	**622 x 178** 24.5 x 7	4 x M30
150 **155**	5 11/16 5 3/4 5 15/16 6	S58	**254** 10.000	**57** 2.2	**535** 21.1	**558 x 120** 22 x 4.7	**666 x 204** 26.2 x 8	4 x M30
160 **170**	6 7/16 6 1/2 6 11/16	S59	**267** 10.512	**60** 2.4	**570** 22.4	**628 x 140** 24.7 x 5.5	**736 x 228** 29 x 9	4 x M30
175 **180**	6 1/4 6 15/16 7	S60	**279** 10.984	**64** 2.5	**580** 22.8	**636 x 152** 25 x 6	**762 x 254** 30 x 10	4 x M30
190 **200**	7 1/4 7 1/2 7 15/16 8	S61	**311** 12.244	**67** 2.6	**655** 25.8	**636 x 172** 25 x 6.8	**838 x 266** 33 x 10.5	4 x M36
220 **230**	8 1/2 8 1/8 9	S62	**349** 13.740	**76** 3.0	**730** 28.7	**736 x 178** 29 x 7	**952 x 280** 37.5 x 11	4 x M42
240 **260**	9 1/2 9 1/4 10	S63	**394** 15.512	**76** 3.0	**790** 31.1	**670 x 304** 26.4 x 12	**914 x 406** 36 x 16	4 x M42

HEAVY SERIES BEARING AND HOUSING

280 MM TO 600 MM (11 IN. TO 24 IN.)

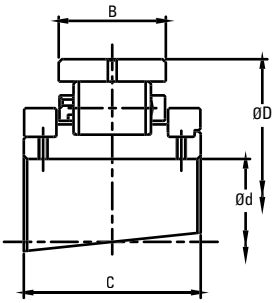

Expansion BX

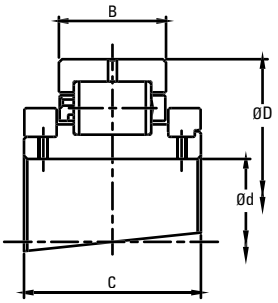

Retained BR

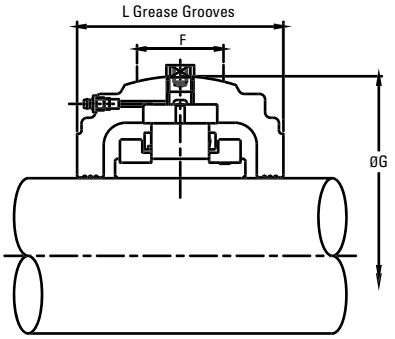

Shaft (d)		Reference		Bearings Ratings							Housing Reference						
		Add **BR** for Retained Add **BX** for Expansion e.g. HSE1700BR		Dynamic C_r	Static C_{or}	Axial C_a	Max	D	B, B_1	C	ATL Seals Add **HRTL** for retained Add **HXTL** for expansion e.g. HS89HRTL	Other Seal Types Add **HR** for Retained Add **HX** for Expansion e.g. HSE1700HR		G	F	L	L_1
mm	in.			**kN** lb.	**kN** lb.	**kN** lb.	RPM	**mm** in.	**mm** in.	**mm** in.				**mm** in.	**mm** in.	**mm** in.	**mm** in.
280	11	HSM280	HSE1100	**2202** 495029	**3507** 788405	**153.00** 34396	620	**495.30** 19.500	**139.70** 5.500	**244.00** 9.606	HS83	HSM280	HSE1100	**571.50** 22.500	**165** 6.5	**356** 14.0	**356** 14.0
300	12	HSM300	HSE1200	**2337** 525379	**3650** 820553	**174.40** 39207	560	**558.80** 22.000	**139.70** 5.500	**244.00** 9.606	HS65	HSM300	HSE1200	**641.40** 25.252	**165** 6.5	**346** 13.6	**370** 14.6
320	13	HSM320	HSE1300	**2718** 611031	**4093** 920143	**198.80** 44692	500	**622.30** 24.500	**160.40** 6.315	**272.00** 10.709	HS66	HSM320	HSE1300	**717.60** 28.252	**170** 6.7	**368** 14.5	–
340 **360**	14	HSM340 HSM360	HSE1400	**2935** 659814	**4973** 1117975	**213.60** 48019	460	**615.95** 24.250	**158.00** 6.220	**279.00** 10.984	HS86	HSM340 HSM360	HSE1400	**704.90** 27.752	**196** 7.7	**432** 17.0	–
380 **400**	15 16	HSM380 HSM400	HSE1500 HSE1600	**3195** 718265	**5238** 1177550	**250.80** 56382	420	**685.80** 27.000	**166.70** 6.563	**292.00** 11.496	HS68 HS68E0548	HSM380 HSM400	HSE1500 HSE1600	**774.70** 30.500	**202** 8.0	**400** 15.7	–
420 **440**	17	HSM420 HSM440	HSE1700	**3582** 805266	**6377** 1433607	**275.80** 62002	360	**700.00** 27.559	**160.00** 6.299	**284.00** 11.181	HS89	HSM420 HSM440	HSE1700	**788.00** 31.024	**200** 7.9	**440** 17.3	–
460	18	HSM460	HSE1800	**3807** 855848	**6611** 1486212	**302.40** 67982	340	**740.00** 29.134	**170.00** 6.693	**294.00** 11.575	HS90	HSM460	HSE1800	**840.00** 33.071	**200** 7.9	**450** 17.7	–
500 **530**	20 21	HSM500 HSM530	HSE2000 HSE2100	**4660** 1047610	**8183** 1839612	**347.00** 78009	310	**850.90** 33.500	**187.40** 7.378	**300.00** 11.811	HS94 HS94E0548	HSM500 HSM530	HSE2000 HSE2100	**958.90** 37.752	**204** 8.0	**495** 19.5	–
560	22	HSM560	HSE2200	**4795** 1077959	**9412** 2115902	**382.60** 86012	280	**863.60** 34.000	**196.90** 7.752	**310.00** 12.205	HS94	HSM560	HSE2200	**958.90** 37.752	**204** 8.0	**490** 19.3	–
580 **600**	23 24	HSM580 HSM600	HSE2300 HSE2400	**4951** 1113029	**9451** 2124669	**400** 89924	270	**890.00** 35.039	**184.00** 7.244	**310.00** 12.205	HS95	HSM580 HSM600	HSE2300 HSE2400	**990.00** 38.976	**204** 8.0	**490** 19.3	–

HEAVY SERIES SUPPORT
S83 - S95

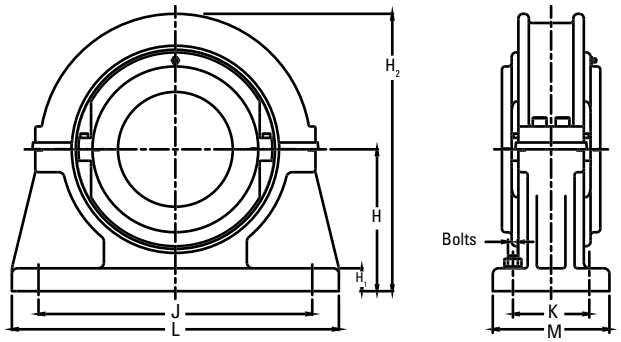

Shaft (d)		Support Reference	H	H_1	H_2	J x K	L x M	Bolts
mm	in.		**mm** in.	**mm** in.	**mm** in.	**mm** in.	**mm** in.	
280	11	S83	**368** 14.488	**70** 2.8	**785** 30.9	**742 & 502 x 178** 29.2 & 19.8 x 7	**940 x 280** 37 x 11	8 x M36
300	12	S65	**457** 17.992	**76** 3.0	**915** 36.0	**876 & 674 x 330** 34.5 & 26.5 x 13	**1092 x 420** 43 x 16.5	8 x M36
320	13	S66	**518** 20.394	**80** 3.1	**1035** 40.7	**978 & 762 x 266** 38.5 & 30 x 10.5	**1194 x 356** 47 x 14	8 x M36
340 **360**	14	S86	**470** 18.504	**82** 3.2	**1000** 39.4	**928 & 660 x 190** 36.5 & 26 x 7.5	**1220 x 318** 48 x 12.5	8 x M42
380 **400**	15 16	S68	**559** 22.008	**92** 3.6	**1120** 44.1	**1036 & 806 x 292** 40.8 & 31.7 x 11.5	**1270 x 394** 50 x 15.5	8 x M42
420 **440**	17	S89	**508** 20.000	**90** 3.5	**1075** 42.3	**990 & 690 x 210** 39 & 27.2 x 8.3	**1270 x 360** 50 x 14.2	8 x M48
460	18	S90	**550** 21.654	**95** 3.7	**1165** 45.9	**1080 & 780 x 220** 42.5 & 30.7 x 8.7	**1370 x 380** 53.9 x 15	8 x M48
500 **530**	20 21	S94	**622** 24.488	**102** 4.0	**1340** 52.8	**1270 & 940 x 242** 50 & 37 x 9.5	**1600 x 406** 63 x 16	8 x M56
560	22	S94	**622** 24.488	**102** 4.0	**1340** 52.8	**1270 & 940 x 242** 50 & 37 x 9.5	**1600 x 406** 63 x 16	8 x M56
580 **600**	23 24	S95	**622** 24.488	**102** 4.0	**1340** 52.8	**1270 & 940 x 242** 50 & 37 x 9.5	**1600 x 406** 63 x 16	8 x M56

HEAVY SERIES
FLANGE UNITS 125 MM TO 260 MM (4 15⁄16 IN. TO 10 IN.)

When faced with flat horizontal or vertical faces, flange units offer a simple mounting solution. As with pillow block supports, flange units are produced with spherical location to accommodate standard bearing housings and provide easy initial alignment of shaft and equipment.

To facilitate positive location of the flange to the surface, the rear face is recessed (dimensions N and V). This allows for a spigot (tolerance f8) to be located into the flange.

Bearing inspection is simply a matter of removing the top half of the flange and housing. Bearing replacement also may be achieved in the same manner if required.

When integrating flange units into new applications, it should be noted that a maximum radial load equivalent to 0.26 C_{or} is permissible. A maximum axial load of 0.25 C_a also must be taken into account for applications with thrust loading. Units for vertically oriented shafts may also need special consideration given to sealing arrangements.

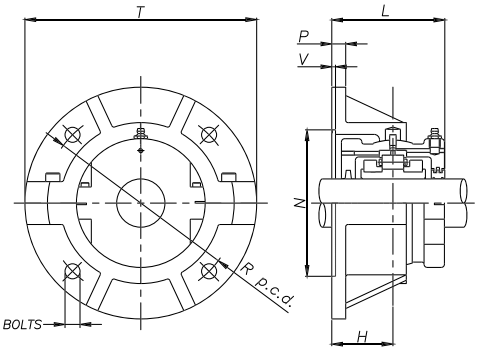

Shaft (d)		Flange Reference	T	R	P	H	N	V	L
mm	in.		**mm** in.	**mm** in.	**mm** in.	**mm** in.	**mm** in.	**mm** in.	**mm** in.
125 **130**	4 15⁄16 5	F56	**530** 20.9	**460** 18.1	**34** 1.3	**122** 4.8	**390.45** 15.372	**7** 0.3	**233** 9.2
150 **155**	5 11⁄16 5 3⁄4 5 15⁄16 6	F58	**648** 25.5	**574** 22.6	**44** 1.7	**137** 5.4	**495.35** 19.502	**7** 0.3	**264** 10.4
175 **180**	6 3⁄4 6 15⁄16 7	F60	**724** 28.5	**638** 25.1	**44** 1.7	**156** 6.1	**546.15** 21.502	**8** 0.3	**298** 11.7
240 **250** **260**	9 1⁄2 9 3⁄4 10	F63	**890** 35.0	**796** 31.3	**48** 1.9	**181** 7.1	**692.20** 27.252	**8** 0.3	**348** 13.7

For bearings and housings see page 72.

SAF/SN/SD BEARINGS

The new compact split plummer block bearing from Timken is the first split cylindrical roller bearing assembly to be interchangeable with standard SAF, SN and SD series plummer blocks, bringing the benefits of a split design to a much wider customer base.

The following topics are covered within this section:

SAFO TWO-BOLT / SAFO FOUR-BOLT BEARING AND HOUSING

1 7⁄16 IN. TO 3 7⁄16 IN.

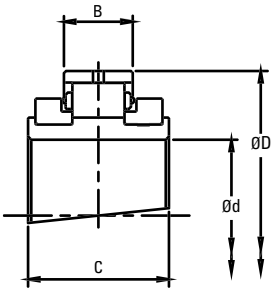

Expansion BX

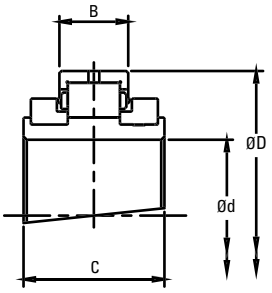

Retained BR

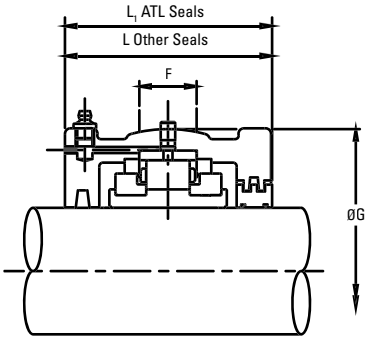

Shaft (d)	Reference			Bearings Ratings						Housing Reference					
	Add **BR** for Retained Add **BX** for Expansion	Additional Bearing(s)		Dynamic C_r	Static C_{or}	Max	D	B	C	Retained	Expansion	G	F	L	L_1
in.		**mm**	in.	**kN** lb.	**kN** lb.	RPM	**mm** in.	**mm** in.	**mm** in.			**mm** in.	**mm** in.	**mm** in.	**mm** in.
1 7⁄16	LSE107	LSM30 LSM35 LSM40	LSE103 LSE104	**63.5** 14296	**65.4** 14724	5400	**84.14** 3.313	**23.8** 0.937	**55** 2.165	LS1HRTL	LS1HXTL	**100** 3.937	**25** 0.984	**84** 3.307	**91** 3.582
1 11⁄16	LSE111	LSM45	LSE112	**83.1** 18694	**87.3** 19643	4630	**98.42** 3.875	**25.4** 1.000	**60** 2.362	LS2HRTL	LS2HXTL	**117.48** 4.625	**25** 0.984	**96** 3.780	**98** 3.858
1 15⁄16	LSE115	LSM45 LSM50	LSE111 LSE112 LSE200	**83.1** 18695	**87.3** 19644	4630	**98.42** 3.875	**25.4** 1.000	**60** 2.362	LS2HRTL	LS2HXTL	**117.48** 4.625	**25** 0.984	**96** 3.780	**98** 3.858
2 3⁄16	LSE203	LSM55 LSM60 LSM65	LSE204 LSE207 LSE208	**102.7** 23118	**115** 25848	3940	**114.3** 4.500	**27** 1.063	**60** 2.362	LS3HRTL	LS3HXTL	**134.94** 5.313	**32** 1.260	**102** 4.016	**104** 4.094
2 7⁄16	LSE207	LSM55 LSM60 LSM65	LSE203 LSE204 LSE208	**102.7** 23118	**114.9** 25848	3940	**114.3** 4.500	**27** 1.063	**60** 2.362	LS3HRTL	LS3HXTL	**134.94** 5.313	**32** 1.260	**102** 4.016	**104** 4.094
2 7⁄16	LSE207	LSM55 LSM60 LSM65	LSE203 LSE204 LSE208	**102.7** 23118	**114.9** 25848	3940	**114.3** 4.500	**27** 1.063	**60** 2.362	LS3HRTL	LS3HXTL	**134.94** 5.313	**32** 1.260	**102** 4.016	**104** 4.094
2 11⁄16	LSE211	LSM70 LSM75	LSE212 LSE215 LSE300	**138** 31041	**160.8** 36179	3310	**133.35** 5.250	**31.8** 1.252	**65** 2.559	LS4HRTL	LS4HXTL	**157.16** 6.187	**38** 1.496	**112** 4.409	**114** 4.488
2 11⁄16	LSE211	LSM70 LSM75	LSE212 LSE215 LSE300	**138** 31041	**160.8** 36179	3310	**133.35** 5.250	**31.8** 1.252	**65** 2.559	LS4HRTL	LS4HXTL	**157.16** 6.187	**38** 1.496	**112** 4.409	**114** 4.488
2 15⁄16	LSE215	LSM70 LSM75	LSE211 LSE212 LSE300	**138** 31041	**160.8** 36179	3310	**133.35** 5.250	**31.8** 1.252	**65** 2.559	LS4HRTL	LS4HXTL	**157.16** 6.187	**38** 1.496	**112** 4.409	**114** 4.488
2 15⁄16	MSE215	MSM70	MSE211 MSE212 MSE300	**258** 58051	**300.3** 67566	3080	**149.22** 5.875	**46.1** 1.815	**82.6** 3.252	MS5HRTL	MS5HXTL	**177.8** 7.000	**50** 1.969	**138** 5.433	**140** 5.512
3 3⁄16	LSE303	LSM80 LSM85	LSE304	**187.3** 42145	**231.3** 52033	2790	**152.4** 6.000	**38.9** 1.532	**70.7** 2.784	LS5HRTL	LS5HXTL	**177.8** 7.000	**50** 1.969	**134** 5.276	**136** 5.354
3 7⁄16	LSE307	LSM80 LSM85	LSE303 LSE304 LSE308	**187.3** 42145	**231.3** 52033	2790	**152.4** 6.000	**38.9** 1.532	**70.7** 2.784	LS5HRTL	LS5HXTL	**177.8** 7.000	**50** 1.969	**134** 5.276	**136** 5.354

SAFQ TWO-BOLT / SAFQ FOUR-BOLT SUPPORT

SAFQ1-2B - SAFQ05-2B

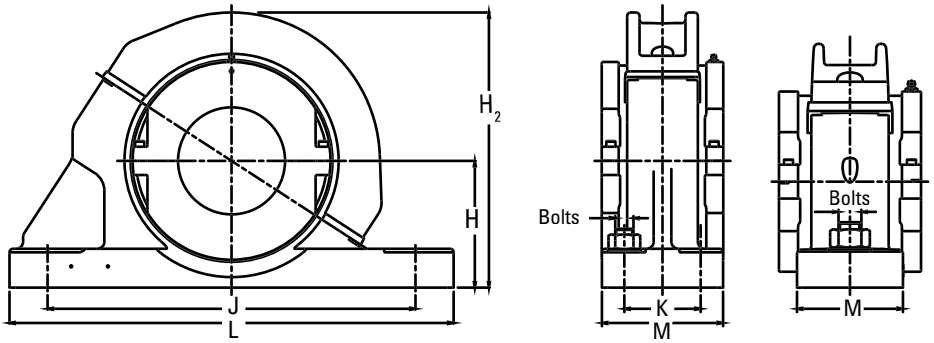

Shaft (d)	Support Reference	SAF Reference	Additional Shafts		H	J		K	Bolts	L	M	H_2
						Min.	Max.					
in.			mm	in.	in.	in.	in.	in.		in.	in.	in.
1 7/16	SAFQ01-2B	SAF 509 2-BOLT	**30** **35** **40**	1 3/16 1 1/4	2 1/4	6 1/4	7	–	2 x 1/2	8 1/4	2 3/16	5.2
1 11/16	SAFQ02-2B	SAF 510 2-BOLT	**45**	1 3/4	2 1/2	6 1/2	7	–	2 x 1/2	8 1/4	2 3/8	5.9
1 15/16	SAFQ02A-2B	SAF 511 2-BOLT	**45** **50**	1 11/16 1 3/4 2	2 3/4	7 3/8	8 1/4	–	2 x 5/8	9 5/8	2 3/4	6.15
2 3/16	SAFQ03-2B	SAF 513 2-BOLT	**55** **60** **65**	2 1/4 2 7/16 2 1/2	3	8 1/4	9 1/2	–	2 x 5/8	11	3 1/4	6.95
2 7/16	SAFQ03A-2B	SAF 515 2-BOLT	**55** **60** **65**	2 3/16 2 1/4 2 1/2	3 1/4	8 5/8	9 5/8	–	2 x 5/8	11 1/8	3 1/8	7.2
2 7/16	SAFQ03A-4B	SAF 515 4-BOLT	**55** **60** **65**	2 3/16 2 1/4 2 1/2	3 1/4	8 5/8	9 5/8	1 7/8	4 x 1/2	11 1/8	3 1/8	7.2
2 11/16	SAFQ04A-2B	SAF 516 2-BOLT	**70** **75**	2 3/4 2 15/16 3	3 1/2	9 3/4	11	–	2 x 3/4	12 19/32	3 1/2	7.95
2 11/16	SAFQ04A-4B	SAF 516 4-BOLT	**70** **75**	2 3/4 2 15/16 3	3 1/2	9 5/8	11	2 1/8	4 x 5/8	12 19/32	3 1/2	7.95
2 15/16	SAFQ04-2B	SAF 517 2-BOLT	**70** **75**	2 11/16 2 3/4 3	3 3/4	9 7/8	11	–	2 x 3/4	12 19/32	3 1/2	8.2
2 15/16	SAFQ05A-4B	SAF 517 4-BOLT	**80** **85**	2 11/16 2 3/4	3 3/4	9 7/8	11	2 1/8	4 x 5/8	12 19/32	3 1/2	8.5
3 3/16	SAFQ05B-2B	SAF 518 2-BOLT	**80** **85**	3 1/4	4	10 1/4	11 3/4	–	2 x 3/4	13 5/8	3 7/8	8.95
3 7/16	SAFQ05-2B	SAF 520 2-BOLT	**80** **85** **90**	3 3/16 3 1/4 3 1/2	4 1/2	11 5/8	13 1/8	–	2 x 7/8	15 23/64	4 11/32	9.6

SAFO TWO-BOLT / SAFO FOUR-BOLT BEARING AND HOUSING

3 7/16 IN. TO 7 15/16 IN.

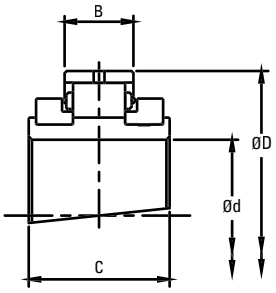

Expansion BX

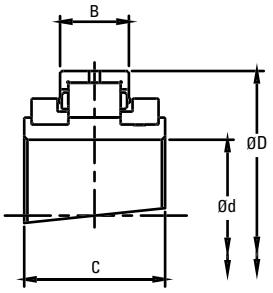

Retained BR

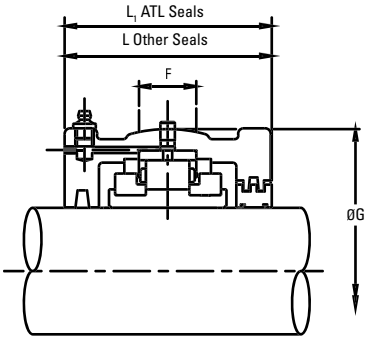

Shaft (d)	Reference			Bearings Ratings						Housing Reference					
	Add **BR** for Retained Add **BX** for Expansion	Additional Bearing(s)		Dynamic C_r	Static C_{or}	Max	D	B	C	Retained	Expansion	G	F	L	L_1
in.		**mm**	in.	**kN** lb.	**kN** lb.	RPM	**mm** in.	**mm** in.	**mm** in.			**mm** in.	**mm** in.	**mm** in.	**mm** in.
3 7/16	MSE307	**MSM80** **MSM85**	MSE303 MSE304 MSE308	**297** 66830	**352.5** 79315	2520	**169.86** 6.687	**48.4** 1.906	**89.7** 3.532	MS6HRTL	MS6HXTL	**203.2** 8.000	**50** 1.969	**152** 5.984	**154** 6.063
3 15/16	MSE315	**MSM95** **MSM100**	MSE311 MSE312 MSE400	**387.7** 87235	**490.6** 110375	2130	**193.68** 7.625	**51.6** 2.032	**92.1** 3.626	MS7HRTL	MS7HXTL	**231.78** 9.125	**64** 2.517	**144** 5.669	**146** 5.748
4 3/16	LSE403	**LSM110** **LSM115**	LSE404 LSE406 LSE407 LSE408	**316** 71105	**426.9** 96059	1970	**203.2** 8.000	**46.9** 1.847	**84.9** 3.343	LS7HRTL	LS7HXTL	**231.78** 9.125	**64** 2.517	**140** 5.512	**142** 5.591
4 7/16	MSE407	**MSM110** **MSM115**	MSE403 MSE404 MSE406 MSE408	**453.9** 102130	**591.7** 133135	1820	**228.6** 9.000	**57.2** 2.252	**100** 3.937	MS8HRTL	MS8HXTL	**266.7** 10.500	**76** 2.992	**160** 6.299	**162** 6.378
4 15/16	MSE415	**MSM120** **MSM125**	MSE411 MSE412	**524.8** 118084	**700.3** 157566	1600	**254** 10.000	**63.5** 2.189	**114.3** 3.874	MS10HR-TLE0509	MS10HX-TLE0509	**287.98** 11.625	**82** 3.228	**182** 6.772	**184** 6.850
5 3/16	LSE503	**LSM135** **LSM140**	LSE504 LSE507 LSE508	**422.5** 95055	**585.2** 131675	1570	**241.3** 9.500	**55.6** 2.189	**98.4** 3.874	LS9HRTL	LS9HXTL	**279.4** 11.000	**76** 2.992	**166** 6.535	**168** 6.614
5 7/16	MSE507	**MSM135** **MSM140**	MSE503 MSE504 MSE508	**600.4** 135088	**816.6** 183729	1450	**273.05** 10.750	**66.7** 2.626	**117.5** 4.626	MS30HRTL	MS30HXTL	**323.85** 12.750	**90** 3.543	**186** 7.323	**188** 7.402
5 15/16	MSE515	**MSM150**	MSE511 MSE512 MSE514	**730.2** 164289	**1033.8** 232600	1320	**292.1** 11.500	**68.3** 2.689	**123.8** 4.874	MS31HRTL	MS31HXTL	**336.55** 13.250	**95** 3.740	**202** 7.953	**204** 8.031
6 7/16	MSE607	**MSM160**	MSE608	**824.1** 185430	**1143** 257168	1200	**317.5** 12.500	**83.3** 3.280	**140** 5.512	MS32HRTL	MS32HXTL	**368.3** 14.500	**95** 3.740	**206** 8.110	**232** 9.134
6 15/16	LSE615	**LSM170** **LSM175** **LSM180**	LSE611 LSE612 LSE700	**524.4** 117993	**827.7** 186233	1220	**285.75** 11.250	**55.5** 2.185	**109** 4.291	LS12HRTL	LS12HXTL	**323.85** 12.750	**70** 2.756	**172** 6.772	**200** 7.874
7 3/16	LSE703	**LSM190** **LSM200**	LSE704 LSE708 LSE715 LSE800	**607** 136576	**989.7** 222676	1070	**311.15** 12.250	**60.3** 2.374	**109** 4.291	LS13HRTL	LS13HXTL	**258.78** 10.188	**86** 3.386	**172** 6.772	**200** 7.874
7 15/16	MSE715	**MSM190** **MSM200**	MSE703 MSE704 MSE708 MSE800	**1012.9** 227893	**1516.3** 341160	960	**368.3** 14.500	**90.5** 3.563	**156** 6.142	MS34HRTL	MS34HXTL	**425.5** 16.752	**105** 4.134	**235** 9.252	**258** 10.157

contiued on next page

SAFQ TWO-BOLT / SAFQ FOUR-BOLT SUPPORT
SAFQ06A - SAFQ34A

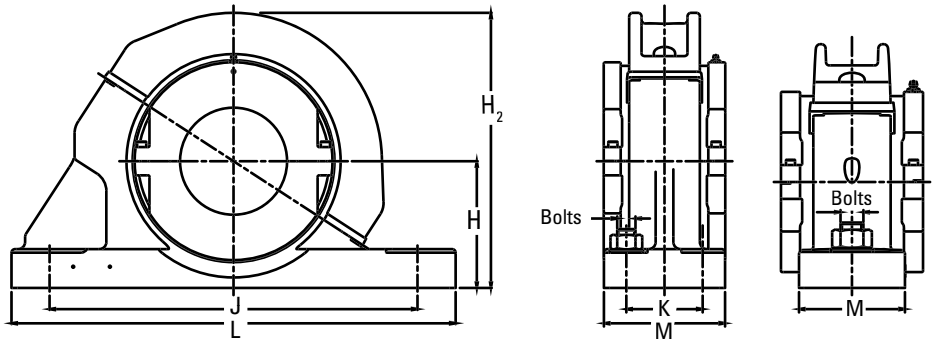

Shaft (d)	Support Reference	SAF Reference	Additional Shafts		H	J		K	Bolts	L	M	H_2
						Min.	Max.					
in.			mm	in.	in.	in.	in.	in.		in.	in.	in.
3 7/16	SAFQ06A	SAF 520 4-BOLT	**80** **85**	3 3/16 3 1/4 3 1/2	4 1/2	11 5/8	13 1/8	2 3/8	4 x 3/4	15 23/64	4 11/32	9.95
3 15/16	SAFQ07A	SAF 522	**95** **100**	3 11/16 3 3/4 4	4 15/16	12 9/16	14 1/2	2 3/4	4 x 3/4	16 1/2	4 3/4	11
4 3/16	SAFQ07B	SAF 524	**110** **115**	4 1/4 4 3/8 4 7/16 4 1/2	5 1/4	13 1/4	14 1/2	2 3/4	4 x 3/4	16 1/2	4 3/4	11.3
4 7/16	SAFQ08A	SAF526	**110** **115**	4 3/16 4 1/4 4 3/8 4 1/2	6	14 1/2	16	3 1/4	4 x 7/8	18 3/8	5 1/8	13.1
4 15/16	SAFQ10A	SAF528	**120** **125**	4 11/16 4 3/4 5	6	15 5/8	17 3/8	3 3/8	4 x 1	19 45/64	5 7/8	13.3
5 3/16	SAFQ09A	SAF530	**135** **140**	5 7/16 5 1/4 5 1/2	6 5/16	16 3/4	18 1/2	3 3/4	4 x 1	21 1/4	6 1/4	14.2
5 7/16	SAFQ30	SAF532	**135** **140**	5 3/16 5 1/4 5 1/2	6 11/16	17 3/8	19 1/4	3 3/4	4 x 1	21 21/32	6 1/4	15.15
5 15/16	SAFQ31	SAF534	**150**	5 11/16 5 3/4 5 7/8 6	7 1/16	19 3/8	21 5/8	4 1/4	4 x 1	24 3/4	6 3/4	15.75
6 7/16	SAFQ32	SAF536	**160**	6 1/2	7 1/2	20 7/8	23 5/8	4 5/8	4 x 1	26 3/4	7 1/8	17.6
6 15/16	SAFQ12	SAF538	**170** **175** **180**	6 11/16 6 3/4 7	7 7/8	21 5/8	24 3/8	4 1/2	4 x 1 1/4	28	7 1/2	16.75
7 3/16	SAFQ13	SAF540	**190** **200**	7 1/4 7 1/2 7 15/16 8	8 1/4	22 1/2	25	5	4 x 1 1/4	29 3/8	8	17.7
7 15/16	SAFQ34A	SAF544	**190** **200**	7 3/16 7 1/4 7 1/2 8	9 1/2	24 3/4	27 7/8	5 1/4	4 x 1 1/2	32 3/4	8 3/4	21.35

LIGHT SNQ/SDQ RANGE BEARING AND HOUSING

35 MM TO 160 MM (1 3⁄16 IN. TO 6 IN.)

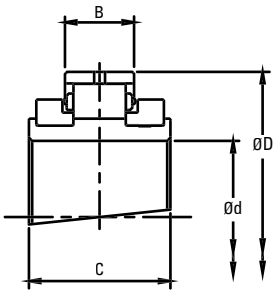

Expansion BX

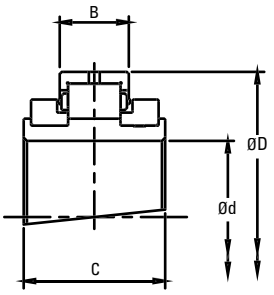

Retained BR

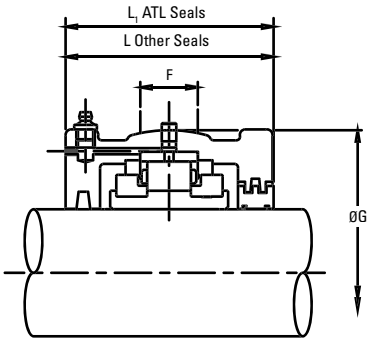

Shaft (d)		Reference		Bearings Ratings							Housing Reference						
		Add **BR** for Retained Add **BX** for Expansion e.g. LSE103BR		Dynamic C_r	Static C_{or}	Axial C_a	Max	D	B, B_1	C	ATL Seals Add **HRTL** for retained Add **HXTL** for Expansion e.g. LS1HRTL	Other Seal Types Add **HR** for Retained Add **HX** for Expansion e.g. LSE103HR		G	F	L	L_1
mm	in.			**kN** lb.	**kN** lb.	**kN** lb.	RPM	**mm** in.	**mm** in.	**mm** in.				**mm** in.	**mm** in.	**mm** in.	**mm** in.
35 **40**	1 3⁄16 1 ¼ 1 7⁄16 1 ½	LSM35 LSM40	LSE103 LSE104 LSE107 LSE108	**65** 14613	**68** 15287	**3.20** 719.38	5400	**84.14** 3.313	**23.80** 0.937	**55.00** 2.165	LS1	LSM35 LSM40	LSE103 LSE104 LSE107 LSE108	**100.00** 3.937	**25** 1.0	**84** 3.3	**91** 3.6
45 **50**	1 11⁄16 1 ¾ 1 15⁄16 2	LSM45 LSM50	LSE111 LSE112 LSE115 LSE200	**83** 18659	**87** 19558	**3.60** 809.30	4630	**98.42** 3.875	**25.40** 1.000	**60.00** 2.362	LS2	LSM50	LSE111 LSE112 LSE115 LSE200	**117.48** 4.625	**25** 1.0	**96** 3.8	**98** 3.9
55 **60** **65**	2 3⁄16 2 ¼ 2 7⁄16 2 ½	LSM55 LSM60 LSM65	LSE203 LSE204 LSE207 LSE208	**103** 23155	**115** 25853	**5.40** 1213.95	3940	**114.30** 4.500	**27.00** 1.063	**60.00** 2.362	LS3	LSM55 LSM60 LSM65	LSE203 LSE204 LSE207 LSE208	**134.94** 5.313	**32** 1.3	**102** 4.0	**104** 4.1
70 **75**	2 11⁄16 2 ¾ 2 15⁄16 3	LSM70 LSM75	LSE211 LSE212 LSE215 LSE300	**138** 31024	**161** 36194	**7.60** 1708.53	3310	**133.35** 5.250	**31.80** 1.252	**65.00** 2.559	LS4	LSM70 LSM75	LSE211 LSE212 LSE215 LSE300	**157.16** 6.187	**38** 1.5	**112** 4.4	**114** 4.5
80 **85** **90**	3 3⁄16 3 ¼ 3 7⁄16 3 ½	LSM80 LSM85 LSM90	LSE303 LSE304 LSE307 LSE308	**187** 42039	**231** 51931	**12.40** 2787.59	2790	**152.40** 6.000	**38.90** 1.531	**75.00** 2.953	LS5	LSM80 LSM85 LSM90	LSE303 LSE304 LSE307 LSE308	**177.80** 7.000	**50** 2.0	**134** 5.3	**136** 5.4
95 **100** **105**	3 11⁄16 3 ¾ 3 15⁄16 4	LSM95 LSM100 LSM105	LSE311 LSE312 LSE315 LSE400	**288** 64745	**366** 82280	**16.00** 3596.90	2340	**174.62** 6.875	**45.30** 1.783	**85.00** 3.346	LS6	LSM95 LSM100 LSM105	LSE311 LSE312 LSE315 LSE400	**203.20** 8.000	**50** 2.0	**132** 5.2	**134** 5.3
110 **115**	4 3⁄16 4 ¼ 4 7⁄16 4 ½	LSM110 LSM115	LSE403 LSE404 LSE407 LSE408	**316** 71040	**427** 95993	**18.60** 4181.39	1970	**203.20** 8.000	**46.90** 1.846	**90.00** 3.543	LS7	LSM110 LSM115	LSE403 LSE404 LSE407 LSE408	**231.78** 9.125	**64** 2.5	**140** 5.5	**142** 5.6
120 **125** **130**	4 11⁄16 4 ¾ 4 15⁄16 5	LSM120 LSM125 LSM130	LSE411 LSE412 LSE415 LSE500	**363** 81606	**496** 111505	**22.20** 4990.69	1740	**222.25** 8.750	**54.00** 2.126	**95.00** 3.740	LS8	LSM120 LSM125 LSM130	LSE411 LSE412 LSE415 LSE500	**266.70** 10.500	**76** 3.0	**154** 6.1	**156** 6.1
135 **140**	5 3⁄16 5 ¼ 5 7⁄16 5 ½	LSM135 LSM140	LSE503 LSE504 LSE507 LSE508	**422** 94869	**585** 131513	**25.80** 5799.99	1570	**241.30** 9.500	**55.60** 2.189	**98.40** 3.874	LS9	LSM135 LSM140	LSE503 LSE504 LSE507 LSE508	**279.40** 11.000	**76** 3.0	**166** 6.5	**168** 6.6
150 **155** **160**	5 11⁄16 5 ¾ 5 15⁄16 6	LSM150 LSM155 LSM160A	LSE511 LSE512 LSE515 LSE600	**459** 103187	**664** 149273	**29.40** 6609.30	1450	**254.00** 10.000	**55.60** 2.189	**98.40** 3.874	LS10	LSM150 LSM155 LSM160A	LSE511 LSE512 LSE515 LSE600	**295.28** 11.625	**82** 3.2	**172** 6.8	**174** 6.9

LIGHT SNQ/SDQ RANGE SUPPORT

SNQ01 - SNQ10

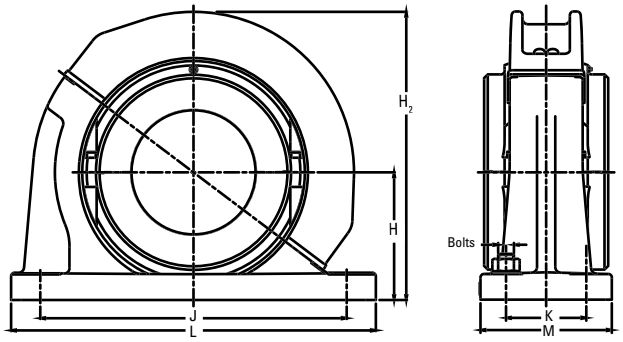

Shaft (d)		Spherical Roller Bearing Reference	SN/SD Reference	H	H_2	J x K	L x M	Bolts
mm	in.			**mm**	**mm**	**mm**	**mm**	
35 **40**	1 3/16 1 1/4 1 7/16 1 1/2	SNQ01	SN 508 SN 509	**60**	**135**	**170**	**205 x 60**	2 x M12
45 **50**	1 11/16 1 3/4 11 5/16 2	SNQ02	SN 511	**70**	**155**	**210**	**255 x 70**	2 x M16
55 **60** **65**	2 3/16 2 1/4 2 7/16 2 1/2	SNQ03	SN 513 SN 515	**80**	**180**	**234**	**275 x 70**	2 x M16
70 **75**	2 11/16 2 3/4 2 15/16 3	SNQ04	SN 516 SN 517	**95**	**208**	**260**	**315 x 90**	2 x M20
80 **85** **90**	3 3/16 3 1/4 3 7/16 3 1/2	SNQ05 SNQ05A SNQ05B	SN 518 SN 519 SN 520	**100** **112** **112**	**230** **242** **242**	**290** **290** **320**	**345 x 100** **345 x 100** **380 x 110**	2 x M20 2 x M20 2 x M24
95 **100** **105**	3 11/16 3 3/4 3 15/16 4	SNQ06	SN 522	**125**	**265**	**350**	**410 x 120**	2 x M24
110 **115**	4 3/16 4 1/4 4 7/16 4 1/2	SNQ07 SNQ07A	SN 524 SN 526	**140** **150**	**300** **310**	**350** **380**	**410 x 120** **445 x 130**	2 x M24 2 x M24
120 **125** **130**	4 11/16 4 3/4 4 15/16 5	SNQ08	SN 528	**150**	**354**	**420**	**500 x 150**	2 x M30
135 **140**	5 3/16 5 1/4 5 7/16 5 1/2	SNQ09 SNQ09A	SN 530 SN 532	**160** **170**	**369** **379**	**450** **470**	**530 x 160** **550 x 160**	2 x M30 2 x M30
150 **155** **160**	5 11/16 5 3/4 5 15/16 6	SDQ10	SD 3134	**170**	**379**	**430 x 100**	**510 x 180**	4 x M24

LIGHT SNQ/SDQ RANGE BEARING AND HOUSING

160 MM TO 305 MM (6 7/16 IN. TO 12 IN.)

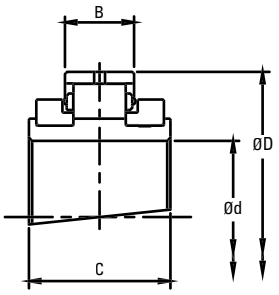

Expansion BX

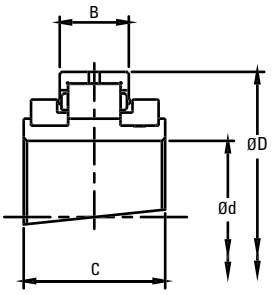

Retained BR

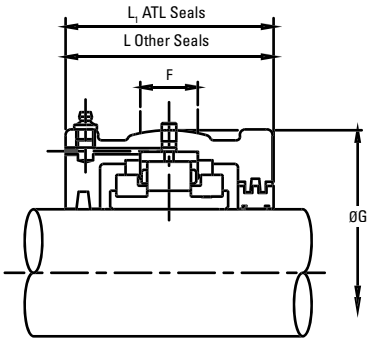

Shaft (d)		Reference		Bearings Ratings							Housing Reference						
		Add **BR** for Retained Add **BX** for Expansion e.g. LSE103BR		Dynamic C_r	Static C_{or}	Axial C_a	Max	D	B, B_1	C	ATL Seals Add **HRTL** for Retained Add **HXTL** for Expansion e.g. LS1HRTL	Other Seal Types Add **HR** for Retained Add **HX** for Expansion e.g. LSE103HR		G	F	L	L_1
mm	in.			**kN** lb.	**kN** lb.	**kN** lb.	RPM	**mm** in.	**mm** in.	**mm** in.				**mm** in.	**mm** in.	**mm** in.	**mm** in.
160 **170**	6 7/16 6 ½	LSM160 LSM170A	LSE607 LSE608	**583** 131064	**792** 178049	**33.00** 7419	1320	**273.05** 10.750	**60.30** 2.374	**109.00** 4.291	LS11	LSM160 LSM170A	LSE607 LSE608	**311.15** 12.250	**76** 3.0	**172** 6.8	**192** 7.6
170 **175** **180**	6 11/16 6 ¾ 6 15/16 7	LSM170 LSM175 LSM180	LSE611 LSE612 LSE615 LSE700	**524** 117800	**828** 186142	**36.40** 8183	1220	**285.75** 11.250	**55.50** 2.185	**109.00** 4.291	LS12	LSM170 LSM175 LSM180	LSE611 LSE612 LSE615 LSE700	**323.85** 12.750	**70** 2.8	**172** 6.8	**200** 7.9
190 **200**	7 3/16 7 ¼ 7 ½ 7 15/16 8	LSM190 LSM200	LSE703 LSE704 LSE708 LSE715 LSE800	**614** 138033	**990** 222561	**41.00** 9217	1070	**311.15** 12.250	**60.30** 2.374	**106.00** 4.173	LS13	LSM190 LSM200	LSE703 LSE704 LSE708 LSE715 LSE800	**358.78** 14.125	**86** 3.4	**172** 6.8	**200** 7.9
220 **230**	8 7/16 8 ½ 8 ⅞ 9	LSM220 LSM230	LSE807 LSE808 LSE814 LSE900	**708** 159165	**1168** 262577	**49.00** 11016	930	**342.90** 13.500	**63.50** 2.500	**115.00** 4.528	LS14	LSM220 LSM230	LSE807 LSE808 LSE814 LSE900	**387.35** 15.250	**82** 3.2	**178** 7.0	**216** 8.5
240 **250** **260**	9 ½ 9 ¾ 10	LSM240 LSM250 LSM260A	LSE908 LSE912 LSE1000	**744** 167258	**1289** 289779	**57.80** 12994	820	**374.65** 14.750	**66.70** 2.626	**122.00** 4.803	LS15	LSM240 LSM250 LSM260A	LSE908 LSE912 LSE1000	**419.10** 16.500	**90** 3.5	**188** 7.4	**222** 8.7
260 **270** **280**	10 7/16 10 ½ 10 ¾ 11	LSM260 LSM270 LSM280	LSE1007 LSE1008 LSE1012 LSE1100	**848** 190638	**1502** 337663	**66.80** 15017	730	**406.40** 16.000	**69.00** 2.717	**128.00** 5.039	LS16	LSM260 LSM270 LSM280	LSE1007 LSE1008 LSE1012 LSE1100	**454.00** 17.874	**95** 3.7	**204** 8.0	**232** 9.1
300 **305**	11 ½ 12	LSM300 LSM305	LSE1108 LSE1200	**929** 208848	**1665** 374307	**78.20** 17580	650	**438.15** 17.250	**74.60** 2.937	**143.00** 5.630	LS17	LSM300 LSM305	LSE1108 LSE1200	**489.00** 19.252	**98** 3.9	**216** 8.5	**248** 9.8

LIGHT SNQ/SDQ RANGE SUPPORT
SDQ11 - SDQ17

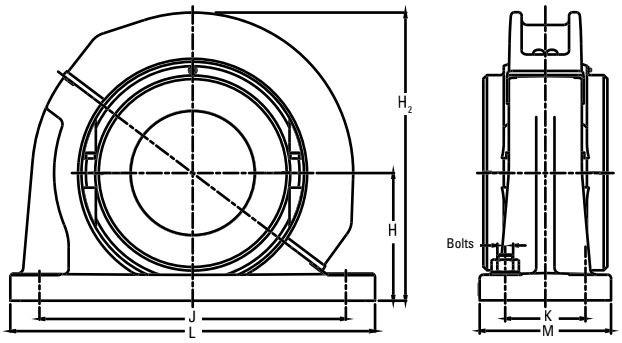

Shaft (d)		Spherical Roller Bearing Reference	SN/SD Reference	H	H_2	J x K	L x M	Bolts
mm	in.			**mm**	**mm**	**mm**	**mm**	
160 **170**	6 7/16 6 ½	SDQ11	SD 3136	**180**	**396**	**450 x 110**	**530 x 190**	4 x M24
170 **175** **180**	6 11/16 6 ¾ 6 15/16 7	SDQ12 SDQ12A	SD 3138 SD 3140	**190** **210**	**417** **437**	**480 x 120** **510 x 130**	**560 x 210** **610 x 230**	4 x M24 4 x M30
190 **200**	7 3/16 7 ¼ 7 ½ 7 15/16 8	SDQ13	SD 3144	**220**	**457**	**540 x 140**	**640 x 240**	4 x M30
220 **230**	8 7/16 8 ½ 8 7/8 9	SDQ14	SD 3148	**240**	**510**	**600 x 150**	**700 x 260**	4 x M30
240 **250** **260**	9 ½ 9 ¾ 10	SDQ15	SD 3152	**260**	**545**	**650 x 160**	**770 x 280**	4 x M36
260 **270** **280**	10 7/16 10 ½ 10 ¾ 11	SDQ16 SDQ16A	SD 3156 SD 3160	**280** **300**	**589** **609**	**670 x 160** **710 x 190**	**790 x 280** **830 x 310**	4 x M36 4 x M36
300 **305**	11 ½ 12	SDQ17	SD3164	**320**	**662**	**750 x 200**	**880 x 330**	4 x M36

LIGHT SN/SD RANGE BEARINGS AND HOUSINGS

35 MM TO 160 MM (1 3⁄16 IN. TO 6 IN.)

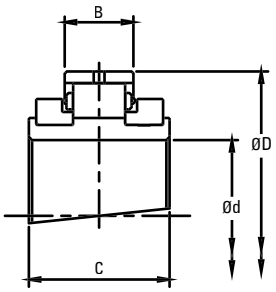

Expansion BX

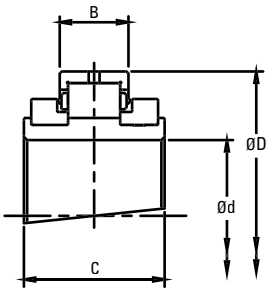

Retained BR

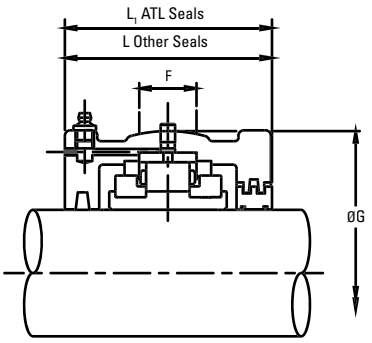

Shaft (d)		Reference		Bearings Ratings							Housing Reference							
		Add **BR** for Retained Add **BX** for Expansion e.g. LSE103BR		Dynamic C_r	Static C_{or}	Axial C_a	Max	D	B	C	ATL Seals Add **HRTL** for Retained Add **HXTL** for Expansion e.g. LS1HRTL	Other Seal Types Add **HR** for Retained Add **HX** for Expansion e.g. LSE103HR		G	F	L	L_1
mm	in.			**kN** lb.	**kN** lb.	**kN** lb.	RPM	**mm** in.	**mm** in.	**mm** in.				**mm** in.	**mm** in.	**mm** in.	**mm** in.
35 **40**	1 3⁄16 1 ¼ 1 7⁄16 1 ½	LSM35 LSM40	LSE103 LSE104 LSE107 LSE108	**65** 14613	**68** 15287	**3.20** 719.38	5400	**84.14** 3.313	**23.80** 0.937	**55.00** 2.165	LS1	LSM35 LSM40	LSE103 LSE104 LSE107 LSE108	**100.00** 3.937	**25** 1.0	**84** 3.3	**91** 3.6
45 **50**	1 11⁄16 1 ¾ 1 15⁄16 2	LSM45 LSM50	LSE111 LSE112 LSE115 LSE200	**83** 18659	**87** 19558	**3.60** 809.30	4630	**98.42** 3.875	**25.40** 1.000	**60.00** 2.362	LS2	LSM50	LSE111 LSE112 LSE115 LSE200	**117.48** 4.625	**25** 1.0	**96** 3.8	**98** 3.9
55 **60** **65**	2 3⁄16 2 ¼ 2 7⁄16 2 ½	LSM55 LSM60 LSM65	LSE203 LSE204 LSE207 LSE208	**103** 23155	**115** 25853	**5.40** 1213.95	3940	**114.30** 4.500	**27.00** 1.063	**60.00** 2.362	LS3	LSM55 LSM60 LSM65	LSE203 LSE204 LSE207 LSE208	**134.94** 5.313	**32** 1.3	**102** 4.0	**104** 4.1
70 **75**	2 11⁄16 2 ¾ 2 15⁄16 3	LSM70 LSM75	LSE211 LSE212 LSE215 LSE300	**138** 31024	**161** 36194	**7.60** 1708.53	3310	**133.35** 5.250	**31.80** 1.252	**65.00** 2.559	LS4	LSM70 LSM75	LSE211 LSE212 LSE215 LSE300	**157.16** 6.187	**38** 1.5	**112** 4.4	**114** 4.5
80 **85** **90**	3 3⁄16 3 ¼ 3 7⁄16 3 ½	LSM80 LSM85 LSM90	LSE303 LSE304 LSE307 LSE308	**187** 42039	**231** 51931	**12.40** 2787.59	2790	**152.40** 6.000	**38.90** 1.531	**75.00** 2.953	LS5	LSM80 LSM85 LSM90	LSE303 LSE304 LSE307 LSE308	**177.80** 7.000	**50** 2.0	**134** 5.3	**136** 5.4
95 **100** **105**	3 11⁄16 3 ¾ 3 15⁄16 4	LSM95 LSM100 LSM105	LSE311 LSE312 LSE315 LSE400	**288** 64745	**366** 82280	**16.00** 3596.90	2340	**174.62** 6.875	**45.30** 1.783	**85.00** 3.346	LS6	LSM95 LSM100 LSM105	LSE311 LSE312 LSE315 LSE400	**203.20** 8.000	**50** 2.0	**132** 5.2	**134** 5.3
110 **115**	4 3⁄16 4 ¼ 4 7⁄16 4 ½	LSM110 LSM115	LSE403 LSE404 LSE407 LSE408	**316** 71040	**427** 95993	**18.60** 4181.39	1970	**203.20** 8.000	**46.90** 1.846	**90.00** 3.543	LS7	LSM110 LSM115	LSE403 LSE404 LSE407 LSE408	**231.78** 9.125	**64** 2.5	**140** 5.5	**142** 5.6
120 **125** **130**	4 11⁄16 4 ¾ 4 15⁄16 5	LSM120 LSM125 LSM130	LSE411 LSE412 LSE415 LSE500	**363** 81606	**496** 111505	**22.20** 4990.69	1740	**222.25** 8.750	**54.00** 2.126	**95.00** 3.740	LS8	LSM120 LSM125 LSM130	LSE411 LSE412 LSE415 LSE500	**266.70** 10.500	**76** 3.0	**154** 6.1	**156** 6.1
135 **140**	5 3⁄16 5 ¼ 5 7⁄16 5 ½	LSM135 LSM140	LSE503 LSE504 LSE507 LSE508	**422** 94869	**585** 131513	**25.80** 5799.99	1570	**241.30** 9.500	**55.60** 2.189	**98.40** 3.874	LS9	LSM135 LSM140	LSE503 LSE504 LSE507 LSE508	**279.40** 11.000	**76** 3.0	**166** 6.5	**168** 6.6
150 **155** **160**	5 11⁄16 5 ¾ 5 15⁄16 6	LSM150 LSM155 LSM160A	LSE511 LSE512 LSE515 LSE600	**459** 103187	**664** 149273	**29.40** 6609.30	1450	**254.00** 10.000	**55.60** 2.189	**98.40** 3.874	LS10	LSM150 LSM155 LSM160A	LSE511 LSE512 LSE515 LSE600	**295.28** 11.625	**82** 3.2	**172** 6.8	**174** 6.9

LIGHT SN/SD RANGE SUPPORT
SN01 - SD10

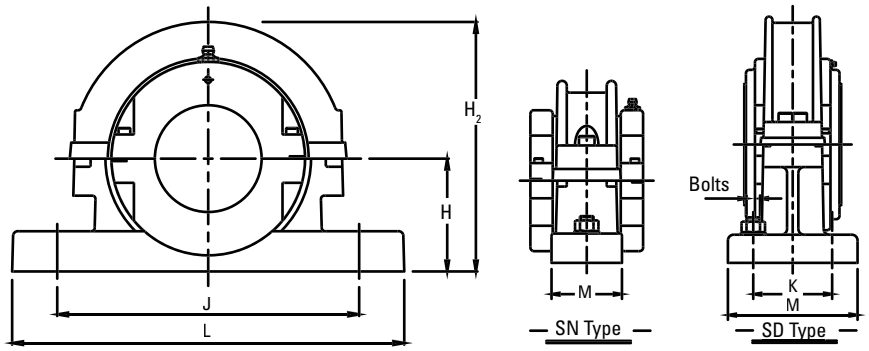

Shaft (d)		Spherical Roller Bearing Reference	SN/SD Reference	H	H_2	J x K	L x M	Bolts
mm	in.			**mm**	**mm**	**mm**	**mm**	
35 **40**	1 3/16 1 1/4 1 7/16 1 1/2	SN01	SN 508 SN 509	**60**	**135**	**170**	**205 x 60**	2 x M12
45 **50**	1 11/16 1 3/4 11 5/16 2	SN02	SN 511	**70**	**155**	**210**	**255 x 70**	2 x M16
55 **60** **65**	2 3/16 2 1/4 2 7/16 2 1/2	SN03	SN 513 SN 515	**80**	**180**	**234**	**275 x 70**	2 x M16
70 **75**	2 11/16 2 3/4 2 15/16 3	SN04	SN 516 SN 517	**95**	**208**	**260**	**315 x 90**	2 x M20
80 **85** **90**	3 3/16 3 1/4 3 7/16 3 1/2	SN05 SN05A SN05B	SN 518 SN 519 SN 520	**100** **112** **112**	**230** **242** **242**	**290** **290** **320**	**345 x 100** **345 x 100** **380 x 110**	2 x M20 2 x M20 2 x M24
95 **100** **105**	3 11/16 3 3/4 3 15/16 4	SN06	SN 522	**125**	**265**	**350**	**410 x 120**	2 x M24
110 **115**	4 3/16 4 1/4 4 7/16 4 1/2	SN07 SN07A	SN 524 SN 526	**140** **150**	**300** **310**	**350** **380**	**410 x 120** **445 x 130**	2 x M24 2 x M24
120 **125** **130**	4 11/16 4 3/4 4 15/16 5	SN08	SN 528	**150**	**354**	**420**	**500 x 150**	2 x M30
135 **140**	5 3/16 5 1/4 5 7/16 5 1/2	SN09 SN09A	SN 530 SN 532	**160** **170**	**369** **379**	**450** **470**	**530 x 160** **550 x 160**	2 x M30 2 x M30
150 **155** **160**	5 11/16 5 3/4 5 15/16 6	SD10	SD 3134	**170**	**379**	**430 x 100**	**510 x 180**	4 x M24

LIGHT SN/SD RANGE BEARINGS AND HOUSINGS

160 MM TO 305 MM (6 7/16 IN. TO 12 IN.)

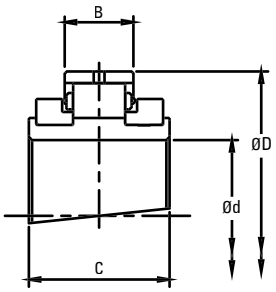

Expansion BX

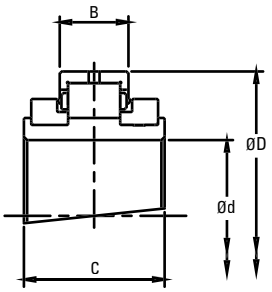

Retained BR

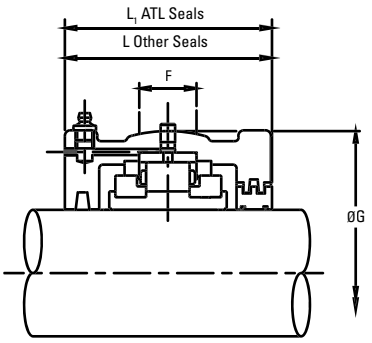

Shaft (d)		Reference		Bearings Ratings							Housing Reference						
		Add **BR** for Retained Add **BX** for Expansion e.g. LSE215BR		Dynamic C_r	Static C_{or}	Axial C_a	Max	D	B, B_1	C	ATL Seals Add **HRTL** for Retained Add **HXTL** for Expansion e.g. LS4HRTL	Other Seal Types Add HR for Retained Add HX for Expansion e.g. LSE215HR		G	F	L	L_1
mm	in.			**kN** lb.	**kN** lb.	**kN** lb.	RPM	**mm** in.	**mm** in.	**mm** in.				**mm** in.	**mm** in.	**mm** in.	**mm** in.
160 **170**	6 7/16 6 1/2	LSM160 LSM170A	LSE607 LSE608	**583** 131064	**792** 178049	**33.00** 7419	1320	**273.05** 10.750	**60.30** 2.374	**109.00** 4.291	LS11	LSM160 LSM170A	LSE607 LSE608	**311.15** 12.250	**76** 3.0	**172** 6.8	**192** 7.6
170 **175** **180**	6 11/16 6 3/4 6 15/16 7	LSM170 LSM175 LSM180	LSE611 LSE612 LSE615 LSE700	**524** 117800	**828** 186142	**36.40** 8183	1220	**285.75** 11.250	**55.50** 2.185	**109.00** 4.291	LS12	LSM170 LSM175 LSM180	LSE611 LSE612 LSE615 LSE700	**323.85** 12.750	**70** 2.8	**172** 6.8	**200** 7.9
190 **200**	7 3/16 7 1/4 7 1/2 7 15/16 8	LSM190 LSM200	LSE703 LSE704 LSE708 LSE715 LSE800	**614** 138033	**990** 222561	**41.00** 9217	1070	**311.15** 12.250	**60.30** 2.374	**106.00** 4.173	LS13	LSM190 LSM200	LSE703 LSE704 LSE708 LSE715 LSE800	**358.78** 14.125	**86** 3.4	**172** 6.8	**200** 7.9
220 **230**	8 7/16 8 1/2 8 7/8 9	LSM220 LSM230	LSE807 LSE808 LSE814 LSE900	**708** 159165	**1168** 262577	**49.00** 11016	930	**342.90** 13.500	**63.50** 2.500	**115.00** 4.528	LS14	LSM220 LSM230	LSE807 LSE808 LSE814 LSE900	**387.35** 15.250	**82** 3.2	**178** 7.0	**216** 8.5
240 **250** **260**	9 1/2 9 3/4 10	LSM240 LSM250 LSM260A	LSE908 LSE912 LSE1000	**744** 167258	**1289** 289779	**57.80** 12994	820	**374.65** 14.750	**66.70** 2.626	**122.00** 4.803	LS15	LSM240 LSM250 LSM260A	LSE908 LSE912 LSE1000	**419.10** 16.500	**90** 3.5	**188** 7.4	**222** 8.7
260 **270** **280**	10 7/16 10 1/2 10 3/4 11	LSM260 LSM270 LSM280	LSE1007 LSE1008 LSE1012 LSE1100	**848** 190638	**1502** 337663	**66.80** 15017	730	**406.40** 16.000	**69.00** 2.717	**128.00** 5.039	LS16	LSM260 LSM270 LSM280	LSE1007 LSE1008 LSE1012 LSE1100	**454.00** 17.874	**95** 3.7	**204** 8.0	**232** 9.1
300 **305**	11 1/2 12	LSM300 LSM305	LSE1108 LSE1200	**929** 208848	**1665** 374307	**78.20** 17580	650	**438.15** 17.250	**74.60** 2.937	**143.00** 5.630	LS17	LSM300 LSM305	LSE1108 LSE1200	**489.00** 19.252	**98** 3.9	**216** 8.5	**248** 9.8

LIGHT SN/SD RANGE SUPPORT
SD11 - SD17

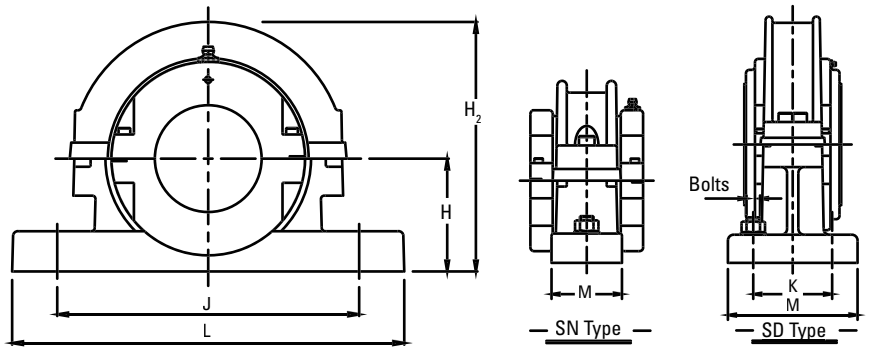

Shaft (d)		Spherical Roller Bearing Reference	SN/SD Reference	H	H_2	J x K	L x M	Bolts
mm	in.			**mm**	**mm**	**mm**	**mm**	
160 **170**	6 7/16 6 1/2	SD11	SD 3136	**180**	**396**	**450 x 110**	**530 x 190**	4 x M24
170 **175** **180**	6 11/16 6 3/4 6 15/16 7	SD12 SD12A	SD 3138 SD 3140	**190** **210**	**417** **437**	**480 x 120** **510 x 130**	**560 x 210** **610 x 230**	4 x M24 4 x M30
190 **200**	7 3/16 7 1/4 7 1/2 7 15/16 8	SD13	SD 3144	**220**	**457**	**540 x 140**	**640 x 240**	4 x M30
220 **230**	8 7/16 8 1/2 8 7/8 9	SD14	SD 3148	**240**	**510**	**600 x 150**	**700 x 260**	4 x M30
240 **250** **260**	9 1/2 9 3/4 10	SD15	SD 3152	**260**	**545**	**650 x 160**	**770 x 280**	4 x M36
260 **270** **280**	10 7/16 10 1/2 10 3/4 11	SD16 SD16A	SD 3156 SD 3160	**280** **300**	**589** **609**	**670 x 160** **710 x 190**	**790 x 280** **830 x 310**	4 x M36 4 x M36
300 **305**	11 1/2 12	SD17	SD 3164	**320**	**662**	**750 x 200**	**880 x 330**	4 x M36

MEDIUM SN/SD RANGE BEARING AND HOUSING

135 MM TO 260 MM (5 3⁄16 IN. TO 10 IN.)

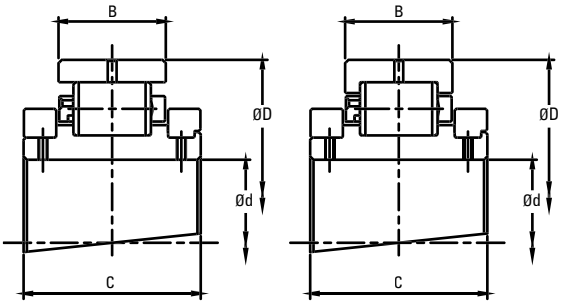

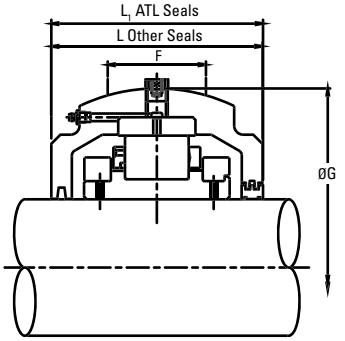

Shaft (d)		Reference		Bearings Ratings							Housing Reference						
		Add **BR** for Retained Add **BX** for Expansion e.g. MSE503BR		Dynamic C_r	Static C_{or}	Axial C_a	Max	D	B	C	ATL Seals Add **HRTL** for Retained Add **HXTL** for Expansion e.g. MS30HRTL	Other Seal Types Add **HR** for Retained Add **HX** for Expansion e.g. MSE503HR		G	F	L	L_1
mm	in.			**kN** lb.	**kN** lb.	**kN** lb.	RPM	**mm** in.	**mm** in.	**mm** in.				**mm** in.	**mm** in.	**mm** in.	**mm** in.
135 **140** **150**	5 3⁄16 5 1⁄4 5 7⁄16 5 1⁄2 6	MSM135 MSM140 MSM150A[1]	MSE503 MSE504 MSE507 MSE508 MSE600A[1]	**600** 134885	**817** 183669	**45.40** 10206	1450	**273.05** 10.750	**66.70** 2.626	**117.50** 4.626	MS30 MS30E0548	MSM135 MSM140 MSM150A	MSE503 MSE504 MSE507 MSE508 MSE600A	**323.85** 12.750	**90** 3.543	**186** 7.323	**188** 7.402
150 **155** **160**	5 11⁄16 5 3⁄4 5 15⁄16 6	MSM150 MSM155 MSM160A[1]	MSE511 MSE512 MSE515 MSE600	**730** 164111	**1034** 232452	**52.40** 11780	1320	**292.10** 11.500	**68.30** 2.689	**123.80** 4.874	MS31 MS31E0548	MSM150 MSM155 MSM160A	MSE511 MSE512 MSE515 MSE600	**336.55** 13.250	**95** 3.74	**202** 7.953	**204** 8.031
160 **170**	6 7⁄16 6 1⁄2	MSM160 MSM170	MSE607 MSE608	**842** 189289	**1175** 264151	**61.40** 13803	1200	**317.50** 12.500	**83.30** 3.280	**140.00** 5.512	MS32	MSM160 MSM170	MSE607 MSE608	**368.30** 14.500	**95** 3.74	**206** 8.11	**232** 9.134
175 **180**	6 11⁄16 6 3⁄4 6 15⁄16 7	MSM175 MSM180	MSE611 MSE612 MSE615 MSE700	**927** 208398	**1357** 305066	**71.20** 16006	1120	**330.20** 13.000	**83.30** 3.280	**140.00** 5.512	MS33	MSM175 MSM180	MSE611 MSE612 MSE615 MSE700	**381.00** 15.000	**95** 3.74	**222** 8.74	**242** 9.528
190 **200**	7 1⁄4 7 1⁄2 7 15⁄16 8	MSM190 MSM200	MSE704 MSE708 MSE715 MSE800	**1013** 227731	**1516** 340810	**80.00** 17985	960	**368.30** 14.500	**90.50** 3.563	**156.00** 6.417	MS34	MSM190 MSM200	MSE704 MSE708 MSE715 MSE800	**425.5** 16.752	**105** 4.134	**235** 9.252	**258** 10.157
220 **230**	8 1⁄2 8 7⁄8 9	MSM220 MSM230	MSE807 MSE814 MSE900	**1138** 255833	**1668** 374981	**89.80** 20188	850	**393.70** 15.500	**90.50** 3.563	**163.00** 6.147	MS35	MSM220 MSM230	MSE807 MSE814 MSE900	**457.20** 18.000	**110** 4.331	**242** 9.528	**274** 10.787
240 **250** **260**	9 1⁄2 9 3⁄4 10	MSM240 MSM250 MSM260	MSE908 MSE912 MSE1000	**1360** 305740	**2130** 478843	**98.80** 22211	750	**431.80** 17.000	**96.80** 3.811	**170.00** 6.693	MS36	MSM240 MSM250 MSM260	MSE908 MSE912 MSE1000	**495.30** 19.500	**118** 4.646	**248** 9.764	**280** 11.024

[1]When ordering these bearings with ATL seals the housing must contain the E0548 suffix.

MEDIUM SN/SD RANGE SUPPORT
SN30 - SD36A

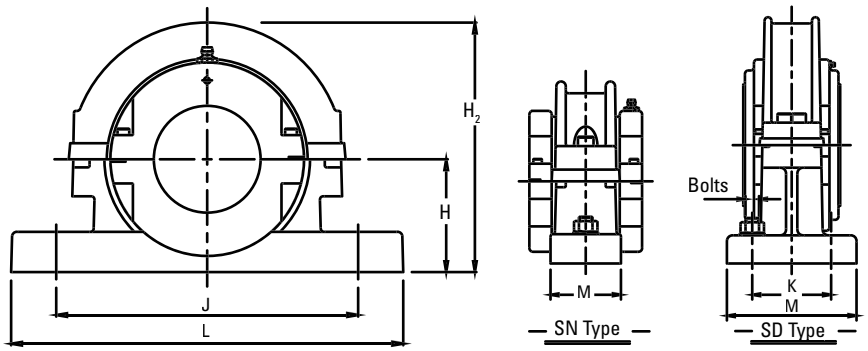

Shaft (d)		Spherical Roller Bearing Reference	SN/SD Reference	H	H_2	J x K	L x M	Bolts
mm	in.			**mm**	**mm**	**mm**	**mm**	
135 **140** **150**	5 3/16 5 1/4 5 7/16 5 1/2 6	SN30 SD30	SNL532 SD/SNL3134	**170** **170**	**397** **397**	**470** **430 x 100**	**550 x 160** **510 x 180**	2 x M30 4 x M24
150 **155** **160**	5 11/16 5 3/4 5 15/16 6	SD31	SD3136 SNL3136	**180**	**410**	**450 x 110**	**530 x 190**	4 x M24
160 **170**	6 7/16 6 1/2	SD32	SD3138 SNL3138	**190**	**456**	**480 x 120**	**560 x 210**	4 x M24
175 **180**	6 11/16 6 3/4 6 15/16 7	SD33	SD3140 SNL3140	**210**	**482**	**510 x 130**	**610 x 230**	4 x M30
190 **200**	7 1/4 7 1/2 7 15/16 8	SD34	SD3144 SNL3144	**220**	**510**	**540 x 140**	**640 x 240**	4 x M30
220 **230**	8 1/2 8 7/8 9	SD35	SD/SNL3148	**240**	**566**	**600 x 150**	**700 x 260**	4 x M30
240 **250** **260**	9 1/2 9 3/4 10	SD36 SD36A	SD/SNL3152 SD/SNL3156	**260** **280**	**614** **634**	**650 x 160** **670 x 160**	**770 x 280** **790 x 280**	4 x M36 4 x M36

MEDIUM SN/SD RANGE BEARING AND HOUSING

270 MM TO 400 MM (10 ½ IN. TO 16 IN.)

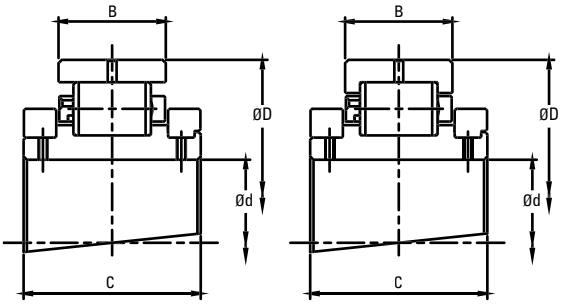

Expansion BX

Retained BR

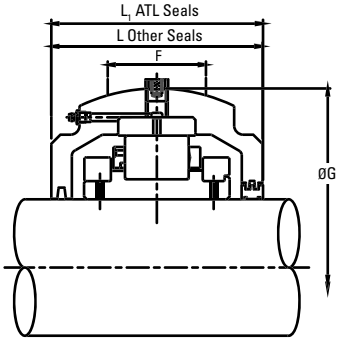

Shaft (d)		Reference		Bearings Ratings							Housing Reference						
		Add **BR** for Retained Add **BX** for Expansion e.g. MSE503BR		Dynamic C_r	Static C_{or}	Axial C_a	Max	D	B	C	ATL Seals Add **HRTL** for Retained Add **HXTL** for Expansion e.g. MS30HRTL	Other Seal Types Add **HR** for Retained Add **HX** for Expansion e.g. MSE503HR		G	F	L	L_1
mm	in.			**kN** lb.	**kN** lb.	**kN** lb.	RPM	**mm** in.	**mm** in.	**mm** in.				**mm** in.	**mm** in.	**mm** in.	**mm** in.
270 **280**	10 ½ 10 ¾ 11	MSM270 MSM280	MSE1008 MSE1012 MSE1000	**1476** 331818	**2357** 529875	**113.80** 25583	670	**463.55** 18.250	**101.60** 4.000	**186.00** 7.323	MS37	MSM270 MSM280	MSE1008 MSE1012 MSE1000	527.10 20.752	130 5.118	264 10.394	300 11.811
300 **305**	11 ½ 12	MSM300 MSM305	MSE1108 MSE1200	**1587** 356771	**2644** 594395	**129.00** 29000	610	**495.30** 19.500	**103.20** 4.063	**193.00** 7.598	MS38	MSM300 MSM305	MSE1108 MSE1200	552.50 21.752	128 5.039	268 10.6	306 12.0
320 **330**	12 ½ 13	MSM320 MSM330	MSE1208 MSE1300	**1851** 416121	**3214** 722536	**144.20** 32417	550	**527.05** 20.750	**106.40** 4.189	**192.00** 7.559	MS39	MSM320 MSM330	MSE1208 MSE1300	587.40 23.126	128 5.039	298 11.732	–
340 **350** **360**	13 ½ 14	MSM340 MSM350 MSM360[1]	MSE1308 MSE1400	**2029** 456137	**3449** 775366	**159.20** 35790	500	**565.15** 22.250	**115.90** 4.563	**200.00** 7.874	MS40 MS40E0548	MSM340 MSM350 MSM360	MSE1308 MSE1400	628.70 24.752	146 5.748	305 12.008	–
380	15	MSM380	MSE1500	**1931** 434106	**3522** 791777	**174.40** 39207	460	**584.20** 23.000	**111.10** 4.374	**200.00** 7.874	MS41	MSM380	MSE1500	647.70 25.500	146 5.748	305 12.008	–
400	16	MSM400	MSE1600	**2105** 473223	**3793** 852700	**188.40** 42354	430	**615.95** 24.250	**115.90** 4.563	**200.00** 7.874	MS42	MSM400	MSE1600	685.80 27.000	146 5.748	324 12.756	–

[1]When ordering these bearings with ATL seals the housing must contain the E0548 suffix.

MEDIUM SN/SD RANGE SUPPORT
SD37 - SD42

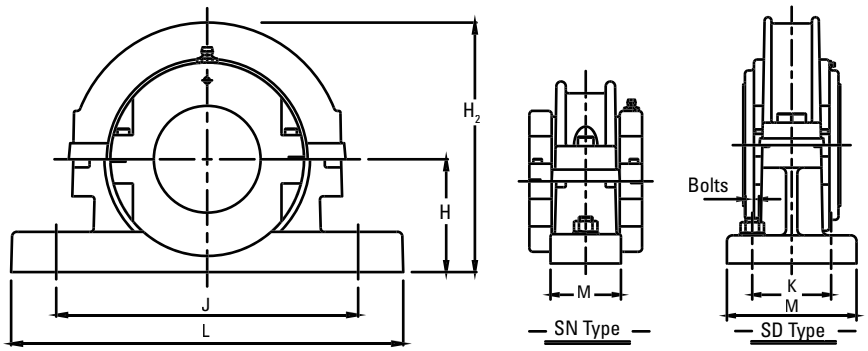

Shaft (d)		Spherical Roller Bearing Reference	SN/SD Reference	H	H_2	J x K	L x M	Bolts
mm	in.			**mm**	**mm**	**mm**	**mm**	
270 **280**	10 ½ 10 ¾ 11	SD37	SD3160 SNL3160	**300**	**682**	**710 x 190**	**830 x 310**	4 x M36
300 **305**	11 ½ 12	SD38	SD3164 SNL3164	**320**	**716**	**750 x 200**	**880 x 330**	4 x M36
320 **330**	12 ½ 13	SD39	SNL3168L	**340**	**761**	**810 x 220**	**950 x 360**	4 x M36
340 **350** **360**	13 ½ 14	SD40 SD40A	SNL3172L SNL3176L	**350** **360**	**799** **809**	**840 x 220** **870 x 220**	**1000 x 360** **1040 x 360**	4 x M36 4 x M36
380	15	SD41	SNL3180L	**380**	**841**	**950 x 240**	**1120 x 390**	4 x M42
400	16	SD42	SNL3184L	**410**	**902**	**1000 x 260**	**1170 x 420**	4 x M42

NOTES

NOTES

To view more Timken catalogs, go to www.timken.com/catalogs for interactive versions, or to download a catalog app for your smartphone or mobile device scan the QR code or go to timkencatalogs.squawqr.com.

TIMKEN

The Timken team applies their know-how to improve the reliability and performance of machinery in diverse markets worldwide. The company designs, makes and markets high-performance mechanical components, including bearings, belts, brakes, clutches, chain, couplings, gears and related mechanical power transmission products and services.

Stronger. By Design.

www.timken.com