Power Transmission Solutions
BTW BE 0416998941
ISO 9001:2008 Certified

Regal Beloit Belgium nv
Heiveldekens, 16
B-2550 Kontich (Antwerp)
Belgium
Tel +32 (0)3 457 68 70
Fax +32 (0)3 457 51 38

info-belgium@regalbeloit.com
www.regalbeloit.com

SPECIFICATION SHEET

ROLLWAY BALL BEARINGS FOR ELECTRIC MOTORS – EMQ

Overview

Overview 1
1. Design 1
2. Marking 2
3. Available Versions 2
4. Standards 2
5. Specifications 3
6. Nomenclature 4

1. Design

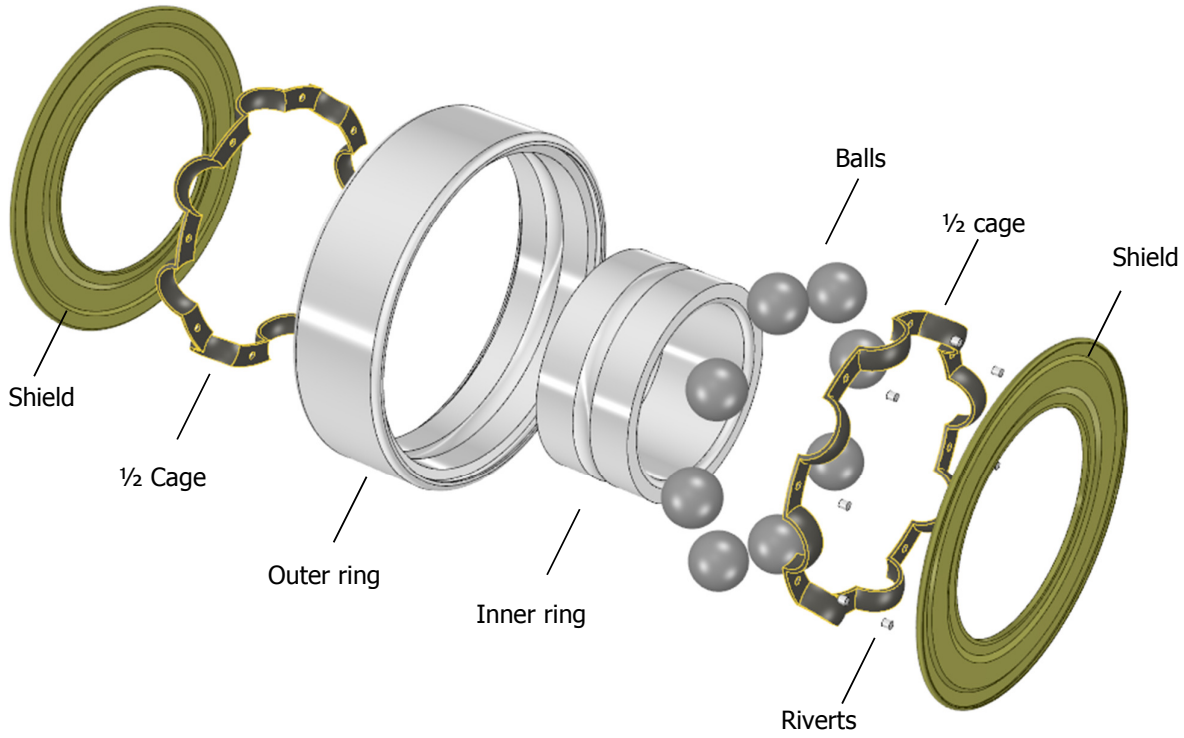

Power Transmission Solutions
BTW BE 0416998941
ISO 9001:2008 Certified

Regal Beloit Belgium nv
Heiveldekens, 16
B-2550 Kontich (Antwerp)
Belgium
Tel +32 (0)3 457 68 70
Fax +32 (0)3 457 51 38

info-belgium@regalbeloit.com
www.regalbeloit.com

2. Marking

The bearing is marked according to ROLLWAY-standard.

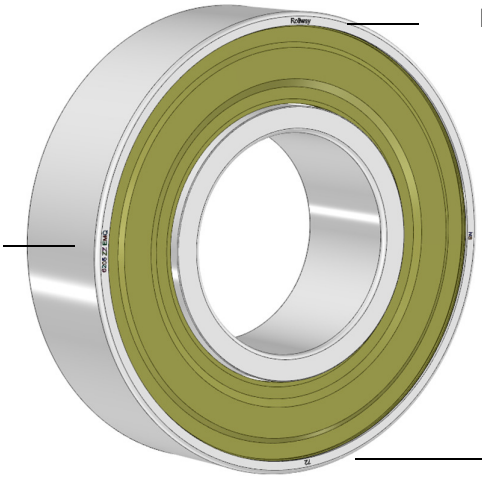

The production codes contain information about the plant and production time and are necessary for traceability purposes.

3. Available Versions

Open Bearing
No suffix

Max. Operating Temp. = 150°C

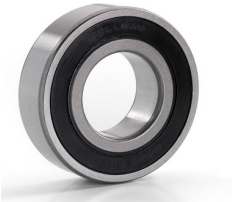

Sealed Bearing
Suffix: ZZ

Max. Operating Temp. = 80°C (100°C)
Grease: Polyrex EM
Seals: NBR

Shielded Bearing
Suffix: ZZ

Max. Operating Temp. = 80°C (120°C)
Grease: Polyrex EM
Shields: Steel

Although the grease can sustain temperatures up to 120°C, the life of the grease and consequently the bearing will be reduced when operating at temperatures over 80°C.
Sealed and shielded bearings are maintenance free and greased for life.

4. Standards

ROLLWAY Ball Bearings for Electric Motors are produced according to following standards:

- In process production standard P6 conform to ISO 492-1981 and is equivalent to ABEC 3.
- Superior steel grade Roll2 used for rings and balls
- Noise Level V3 is conform to standard JBT10187-2000 and is standard up to diameter 40mm.
- Up to diameter 40mm noise level is V2. V3 also available on special request.

REGAL
Power Transmission Solutions
BTW BE 0416998941
ISO 9001:2008 Certified
Regal Beloit Belgium nv
Heiveldekens, 16
B-2550 Kontich (Antwerp)
Belgium
Tel +32 (0)3 457 68 70
Fax +32 (0)3 457 51 38
info-belgium@regalbeloit.com
www.regalbeloit.com

5. Noise level specifications

DEEP GROOVE BALL BEARING VIBRATION (VELOCITY) Specification of Andero test (A) JBT 10187- 2000								
	V2				V3			
d	L	M	H	N	L	M	H	N
3	48	26	22	20	31	16	15	20
4	48	26	22		31	16	15	
5	58	36	30		35	21	18	
6	58	36	30		35	21	18	
7	72	48	40	30	44	28	24	30
8	72	48	40		44	28	24	
9	72	48	40		44	28	24	
10	90	60	50	40	55	35	30	40
12	90	60	50		55	35	30	
15	110	78	60		65	46	35	
17	110	78	60		65	46	35	
20	130	100	75		80	60	45	
22	130	100	75	80	80	60	45	80
25	130	100	75		80	60	45	
28	130	100	75		80	60	45	
30	150	120	100		90	75	60	
32	150	120	100		90	75	60	
35	150	120	100		90	75	60	
40	180	150	130		110	90	80	
45	180	150	130	120				
50	210	160	160					
55	210	180	180					
60	240	180	200					
65	130	100	150	180				
70	150	120	200					
75	150	120	200					
80	180	120	240					
85	180	150	240	225				
90	210	180	270					
95	210	180	270					
100	250	215	310					

Power Transmission Solutions
BTW BE 0416998941
ISO 9001:2008 Certified

Regal Beloit Belgium nv
Heiveldekens, 16
B-2550 Kontich (Antwerp)
Belgium
Tel +32 (0)3 457 68 70
Fax +32 (0)3 457 51 38

info-belgium@regalbeloit.com
www.regalbeloit.com

6. Nomenclature

- Available series: 6000 – 6200 – 6300
- Suffix: EMQ Electro motor quality
- Full numbers: 6210 EMQ
  - EMQ : Electro motor quality
  - Open bearing
  - Available in CN – C3 – C4.

  6210 ZZ C3 EMQ
  - EMQ : Electro motor quality
  - ZZ : Shielded and lubricated bearing
  - C3 : Radial clearance class C3
    Available in CN – C3 – C4.

- 6210 2RS C3 EMQ
  - EMQ : Electro motor quality
  - 2RS : Sealed and lubricated bearing
  - C3 : Radial clearance class C3
    Available in CN – C3 – C4.